NOZZLE SCHEDULE								
MARK	QT'Y	SIZE	RATING	MAT'L.	NECK THK.	MAT'L.	DESCRIPTION	DET.
A	1	2"	150# RF SO FLG	SA182-F304L	SCH. 10S	SA312-304L	INLET (FR. V-833-1) RECOVERED TOL. REC.	A
B_1	1	2"	↓	↓	↓	↓	OUTLET (TO V-825) REACTOR WASH VESSEL	
B_2	1	2"	↓	↓	↓	↓	OUTLET (TO V-860 A & B) TOL. HEAD TK.	
C	1	3"	↓	↓	↓	↓	SLEEVE FOR NOZZ. "A"	A

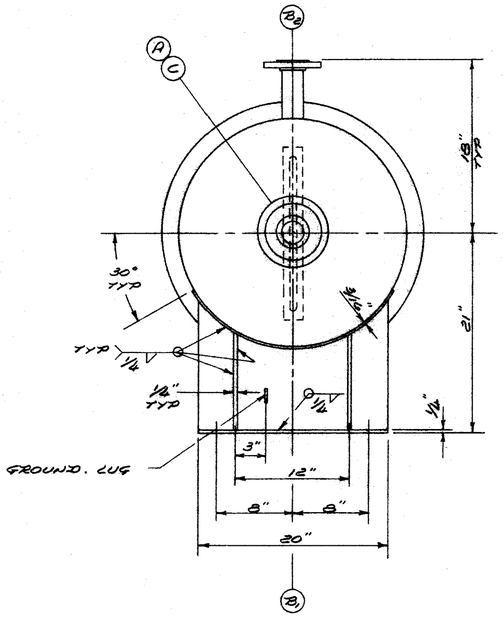

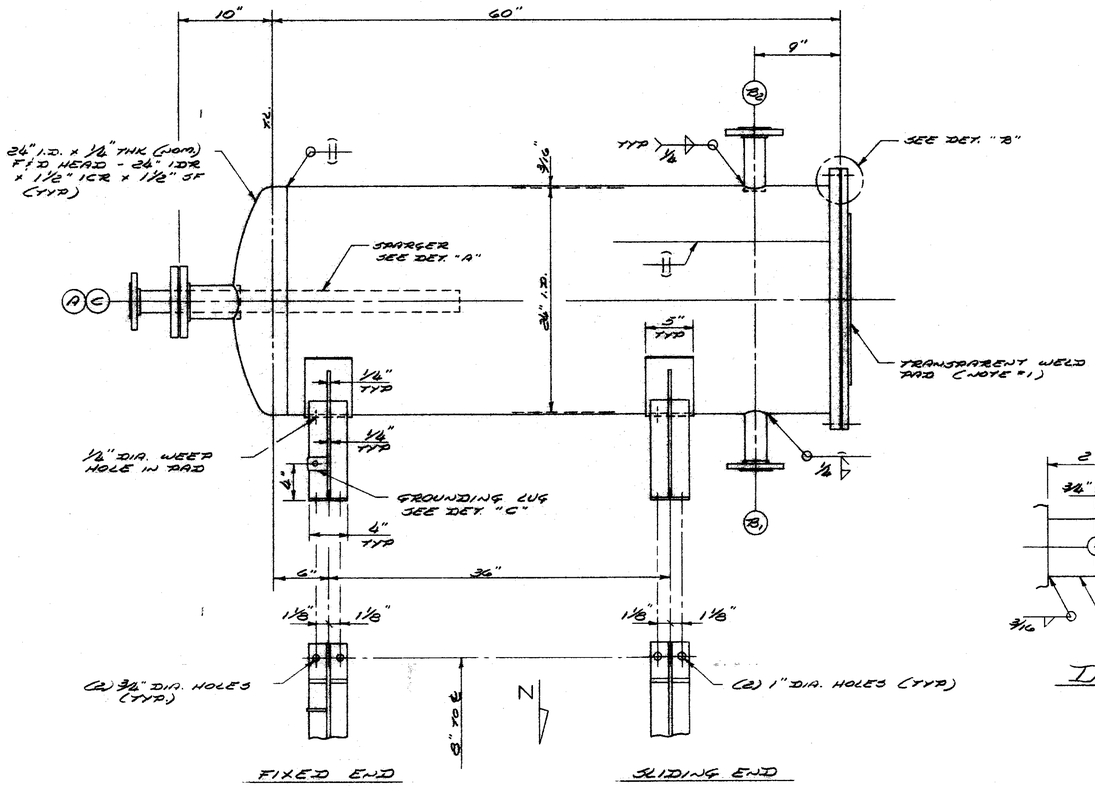

ELEVATION
LOOKING SOUTH

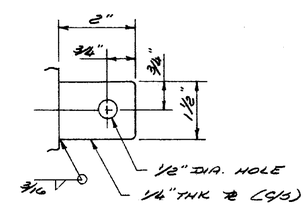

DETAIL - "C"

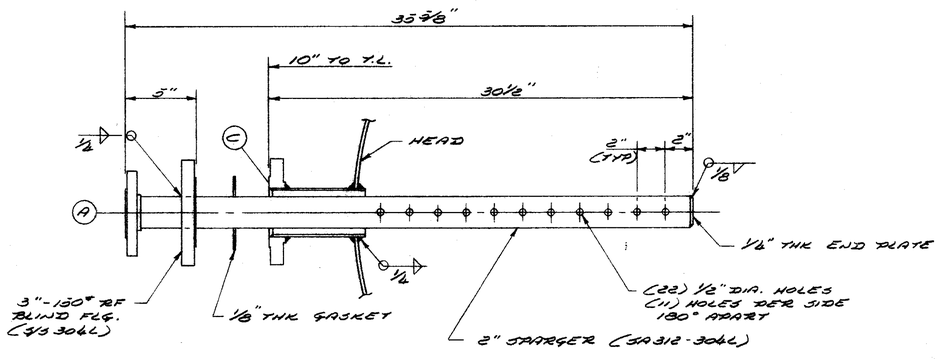

DETAIL - "A"

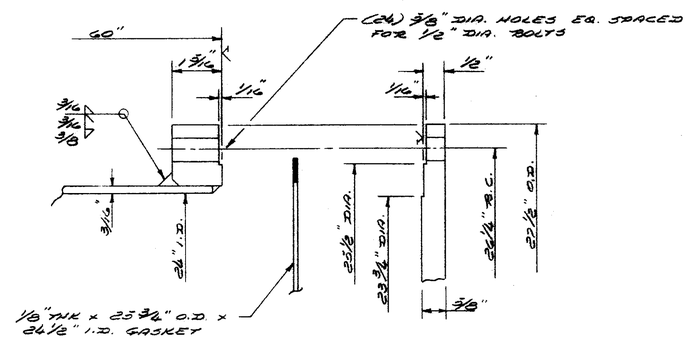

DETAIL - "B"

NOTES:

CONSTRUCTION TO BE IN ACCORDANCE WITH THE LATEST EDITION OF THE A.S.M.E. CODE, SECTION VIII, DIV. I, PART UW, 12 (b) ADDENDA. —
A.S.M.E. CODE STAMP: ☐YES ☒NO
X-RAY: SPOT JOINT EFFICENCY: SHELL: 85 HEADS 100
LIQUID PENETRANT EXAMINATION: NONE
DESIGN PRESSURE: 15 PSIG / 6" WATER VAC.
TEST PRESSURE: 25 PSIG
DESIGN TEMPERATURE: 300°F ✓
CORROSION ALLOWANCE: 0
HEAT TREATMENT: NONE
MATERIALS OF CONSTRUCTION UNLESS OTHERWISE NOTED:
HEADS: SA240 - 304L
SHELL: SA240 - 304L
NOZZLES: SA312 - 304L
COUPLINGS: —
FLANGES: SA182 - F304L
PADS: —
INTERNALS: S/S 304L
SADDLES: ~~FOOT & LUGS~~: S/S 304L / SA36
REINFORCING PADS: —
BOLTS, NUTS & STUDS: SA193 - B8 / SA194 - GR 8 (S/S 304)
PAINT: CARBOLINE CARBO ZINC - 11 (GREEN)
GASKETS: TEFLON ENVELOPE W/ NON ASBESTOS FILLER (GARLOCK 3000 SERIES OR EQUAL)

WELDING PROCEDURE: NO. 4, 5, 26, 6
WELDING WIRE:
WELDING FLUX & GASSES:
ALL BOLT HOLES TO STRADDLE NORTH, SOUTH, EAST & WEST CENTERLINES UNLESS NOTED OTHERWISE.
INSPECTION BY CUSTOMER PRIOR TO A.S.M.E. CODE INSPECTIONS.
SURFACE PREPARATION & PAINTING:
INTERIOR: TO BE FREE OF MILL SCALE, SLAG, WELD SPLATTER AND DIRT.

EXTERIOR: TO BE FREE OF MILL SCALE, SLAG, WELD SPLATTER AND CARBON STEEL SURFACES TO BE PAINTED WITH ONE (1) COAT OF PAINT 3.0 MDFT.

SHIPPING: ALL MACHINED SURFACES ARE TO BE COVERED, CAPPED OR PLUGGED

SPECIAL NOTES: 1. INTEGRAL SIGHT GLASS 2" WIDE AND APPROX. 18" LONG (SUPPLIED BY CUSTOMER) JERGUSON - MODEL 113 - TW - 12 - 304L S/S
UNITS REQUIRED - ONE
WEIGHT APPROX 825 LBS. (ESTIMATE)

2. PAINT ITEM NO. V-829 ON SIDE OF VESSEL IN AT LEAST 2" HIGH LETTERS.

T. Kuchinski 1/29/87

RECEIVED
FEB 02 1987
J. ERNEST FARNELL & ASSOCIATES, INC.

DATE	REV	DESCRIPTION
1/29/87	1	REV. PER CUST. MARKED UP PRINT

JOB IDENTIFICATION: P.O. NO. 28-501-PO 0029

FOR: J. ERNEST FARNELL & ASSOCIATES MOBILE, ALABAMA

REF: TOLUENE WASH SEPARATOR ITEM NO. V-829

BY: PHILLIPS STEEL FAB., INC. OAKLAND, N.J.

DWG BY: T.K	S.O. NO 5021	1 OF 1
APP'D BY:	DWG NO D-5021 A	REV 1
DATE: 11/3/86		