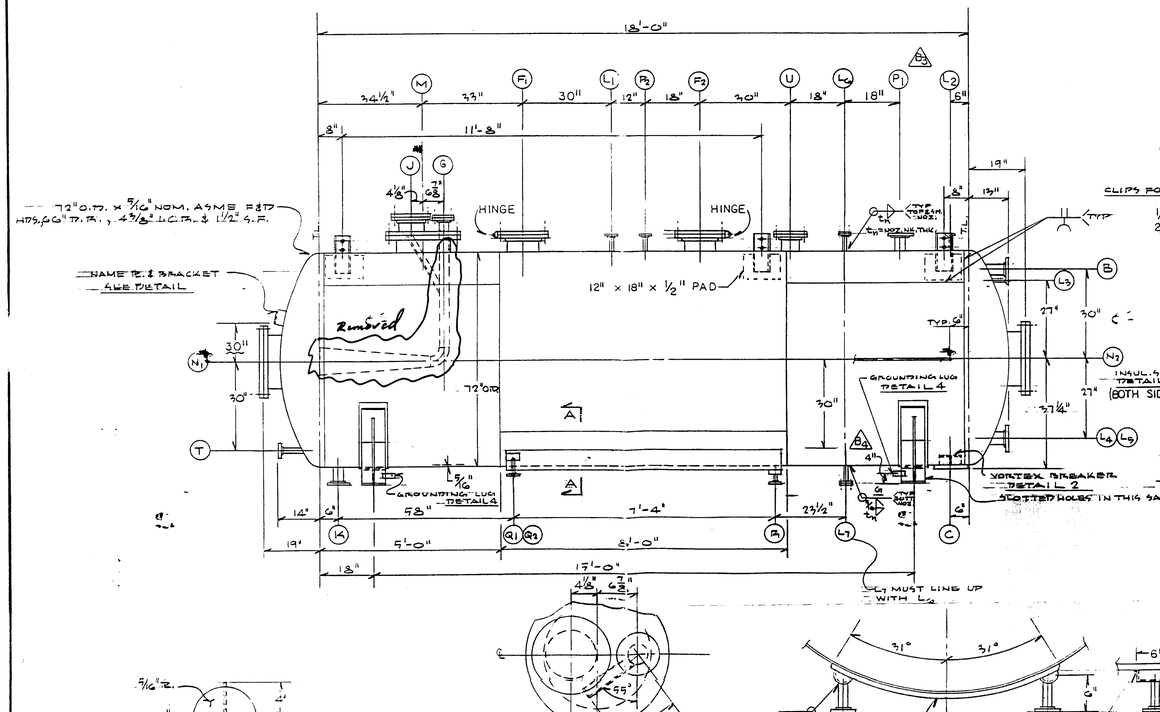

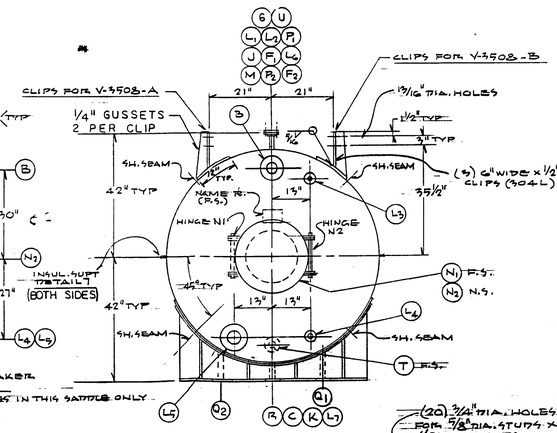

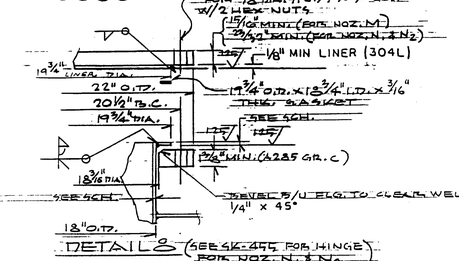

DETAIL 3 (SEE SK-455 FOR HINGE FOR NOZ. N1 & N2)

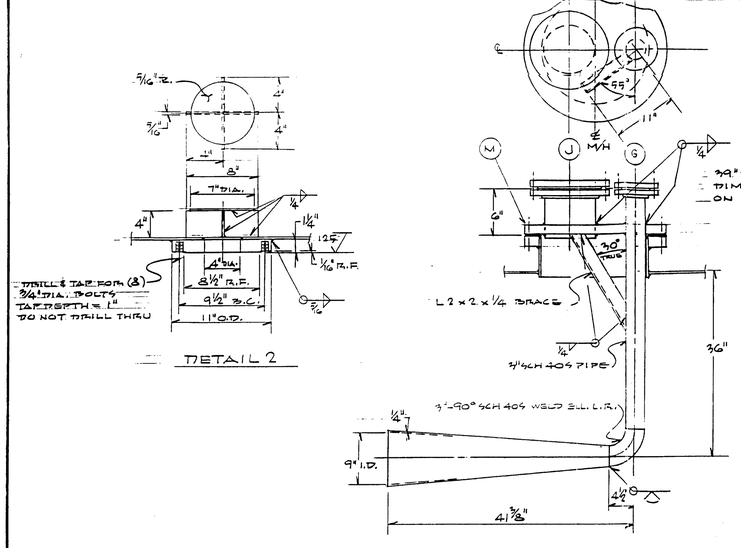

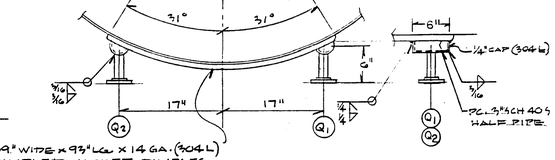

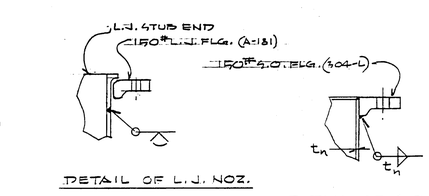

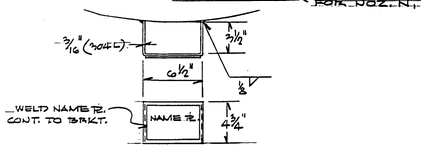

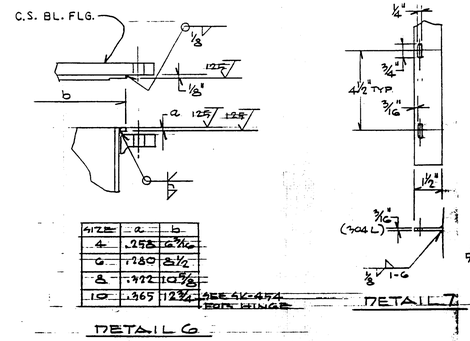

SIZE	a	b
4	.258	6 3/16
6	.280	8 1/2
8	.322	10 5/8
10	.365	12 3/4

SEE SK-454 FOR HINGE

DETAIL 6

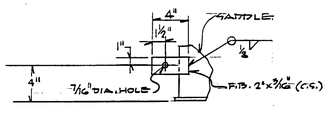

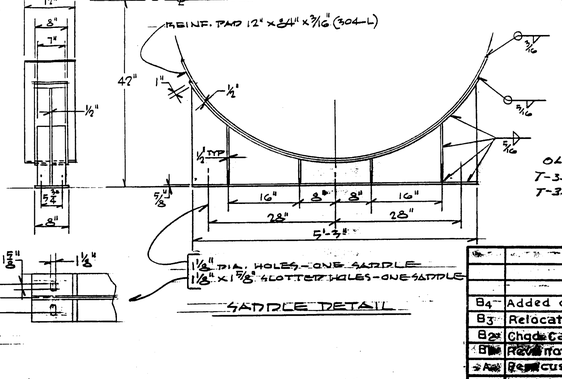

SADDLE DETAIL

NOZZLE SCHEDULE

MK	SIZE	SCH	DESCRIPTION	SERVICE
G	3"	40S	150# L.J. FLG. & STUB END W/ BL. FLG.	LIQ. IN W/DIP PIPE
H	3"	40S	DITTO (NO BL. FLG)	LIGHT LIQ. OUT
C	4"x11"	—	STUDDING PAD SEE DET. 2	HVY. LIQ. OUT
L1 & 2	1"	160S	150# S.O. FLG. R.F.	N2 & LIC INLET
F1	10"	1/4" t	150# L.J. FLG. & STUB END - SEE DET. 6 SK-454	WASH OUT W/ HINGED COVER
F2	10"	1/4" t	DITTO	WASHOUT W/ HINGED COVER
U	8"	40S	150# L.J. FLG. W/ STUB END & BL. FLG. SEE DET. 6	CLEANOUT IN M.H. SWAB. FLG.
K	6"	40S	150# L.J. FLG. & STUB END — DET 6	WASH OUT
U	6"	40S	DITTO WITH BL. FLG. — SEE DET 6	SPARE
P1				
L3	1"	160S	150# S.O. FLG. R.F.	LG
L4	1"	160S	DITTO	LG
L5	4"	40S	150# L.J. FLG. & STUB END - SEE DET. 6	LIC
L6	1"	160S	150# S.O. FLG. R.F. W/ BL. FLG.	FUTURE L.C. W/ BL. FLG.
L7	1"	160S	DITTO	FUTURE L.C. W/ BL. FLG.
M	18"	5/16" t	50# MANHOLE W/COVER - SEE DET. 8	MANHOLE W/COVER
N1	18"	1/4" t	50# MANHOLE - HINGED - SEE DET. 8 SK-455	CLEANOUT W/HINGED COVER
N2	18"	1/4" t	DITTO	CLEANOUT W/HINGED COVER
P1	3"	40S	150# L.J. FLG. & STUB END	PRESS. RELIEF VALVE
P2	1"	160S	150# S.O. FLG. R.F.	PIC
Q1	1"	40S	DITTO	STEAM IN
Q2	1"	40S	DITTO	STEAM IN
R	1"	40S	DITTO	COND. OUT
T	1 1/2"	80S	DITTO	T.I.

DESIGN DATA

1. DESIGN PRESSURE & TEMP. = (VSL) 35 PSIG @ 280° F
   (JKT.) = F.V. & 50 PSIG @ 320° F
2. CORROSION ALLOWANCE = (VSL.) 1/16"
   (JKT.) 0"

CONSTRUCTION NOTES

1. VESSEL TO BE DESIGNED & CONSTRUCTED PER 1974 ASME CODE, SECTION VIII, DIV. 1 & 50 STAMPED. JKT. TO BE ASME STAMPED ALSO.
2. MATL.:
   HDS. & SH. - SA 240 TP 304L
   NOZ. NKS. - SA 312 TP 304L
   NOZ. FLGS. (S.O.) & BLT. - SA 182 F 304L
   NOZ. FLGS. (L.J.) - SA 182 GR. I
   M/H COVER - SA 285 GR. C
   N/U FLGS. (VSL.) - SA 285 GR. C
   PADS - SA 240 TP 304L
   INTERNALS - SA 240 TP 304L
   CLIPS - SA 240 TP 304L
   SUPPORTS - SA 285 GR. C
   GASKETS - 3/16 TFE ENVELOPE W/COMP. ASB. FILLER (HIP) (PLANTE) BETWEEN TWO LAYERS OF FELTED BLK. ASBESTOS AS - GARLOCK 3GA-W/3006 FILLER OR EQUAL.
   BOLTS - SA 193 B7
   NUTS - SA 194 2H
   WELD ROD - 4/4 TO 4/4 E308L C.S. TO 4/4 E309 C.S. TO C.S. E7010
   TEST GASKETS - JM 61 COMP. ASB.
3. ALL BOLT HOLES TO STRADDLE 0°-180° & OR ITS PARALLEL
4. MAX. INSIDE NOZ. PROJECTION = 1/2" EXCEPT FOR NOZ. A & L1. BOTH NOZZLES TO BE FLUSH.
5. FLG. FACE FINISH = 125 AA & MFR'S STD.
6. TEST = (VSL) 57 PSIG HYDRO.
   (JKT.) 78 PSIG HYDRO.
7. JKT. TO BE GIVEN HALOGEN LEAK 25 PSIG. FREON 12 & AIR WITH 10-6 CC/SEC SENSITIVITY PROBE.
8. TEST GASKETS ON COMPLETED NOZZLES TO BE SHIPPED STRIP PLACE & NEW GASKETS SHIPPED SEPARATELY
9. INSIDE & OUTSIDE OF VESSEL TO BE CLEANED OF RUST, LOOSE SCALE, GREASE, SPATTER, ETC.
10. CLOSE ALL OPENINGS WITH SOFT RUBBERS & METAL SHIPPING COVERS.
11. SANDBLAST ALL C.S. PARTS & PRIME ONE COAT FARBOIL #50 PER 196, 3-4 MIL DFT
12. ITEM NO., 0°-180° ℄, SHIPPING WT., & NORTH ARROW TO BE PAINTED ON VESSEL.
13. VOLUME = 4067 GALS.
14. WEIGHTS - EMPTY = 8152 LBS.
    FULL OF WATER = 41,903 LBS.
15. INSUL. THICKNESS = 2 1/2" (BY OTHERS)
16. USE WELD PROCEDURE #P-3095-10-12, -19 & -23
17. TWO VESSELS REQD.
18. HOLD FABRICATION FOR ASME INSPECTION APPROVAL AT:
    a. PIT-UP
    b. COMPLETION OF BACK GOUGING
    c. FINAL TEST
19. INSIDE WELDS TO BE FINISHED PER IAF SAMPLE AS APPROVED BY CATALYTIC.

IAF REF. DWGS.
SK-454 HINGES
SK-455 HINGES

93542

5-20-76
CWB

SULFENTRAZONE REFERENCE
CAT. INC. P.O. #35421-0801-215
ITEM NOS. V-3508-A & V-3508-B
JKT. DWG. #P-3080G4 REV. 2
SPEC. 1754-20-0800-01-00-G PARTS
SPEC. 35420-2200-00-20 PG. 17, 18 & 19 INSUL. SUPT.
S-0800-102 M/H HINGE
S-0800-112 GROUNDING LUG
S-2081126 SADDLE SUPPORT

OLD #	New #	
T-3598A	T-17620	P.N. 23798
T-3598B	T-17640	P.N. 23799

T-17620
P.N. 2379

CATALYTIC, INC.
PHILADELPHIA, PENNSYLVANIA
YEAR BUILT 1976
MAX. DESIGN PRESS. IN 35 PSIG AT 280 °F
MAXIM. TEMP. RANGE IN -40 TO 150 °F 110 TO 280 °F
MAX. DESIGN PRESS. OUT PSIG AT °F
MAXIM. TEMP. RANGE OUT -20 TO 150 °F 110 TO 280 °F
CLIENT'S NO. TER. NO. V-4420-2
MAX. DESIGN SER. NO. STATE NO. 80
MFR. IAF TP. NO. 23450
-A -B -1 -2 1-66 -67

MARK	REVISIONS	DATE	BY	CHK
B4	Added grd. lug elev.	5/17/76		
B3	Relocate Nozz. P1			
B2	Chgd. Cat. dwgs. rev. #			
B1	Rev. material			
A2	Rev. cust. approval	4/19/76		
A1	Rev. cust. approval			

INDUSTRIAL ALLOY FABRICATORS, INC.
RICHMOND, VIRGINIA 23222
72" O.D. x 18'-0" T.T.H. PRODUCT RECANTER
CUST. CATALYTIC, INC.
PHILADELPHIA, PA.
DATE 4/19/76 JOB NO. 7235 SCALE 1/2" = 1'-0" DATE 4/16/76
D-1408B