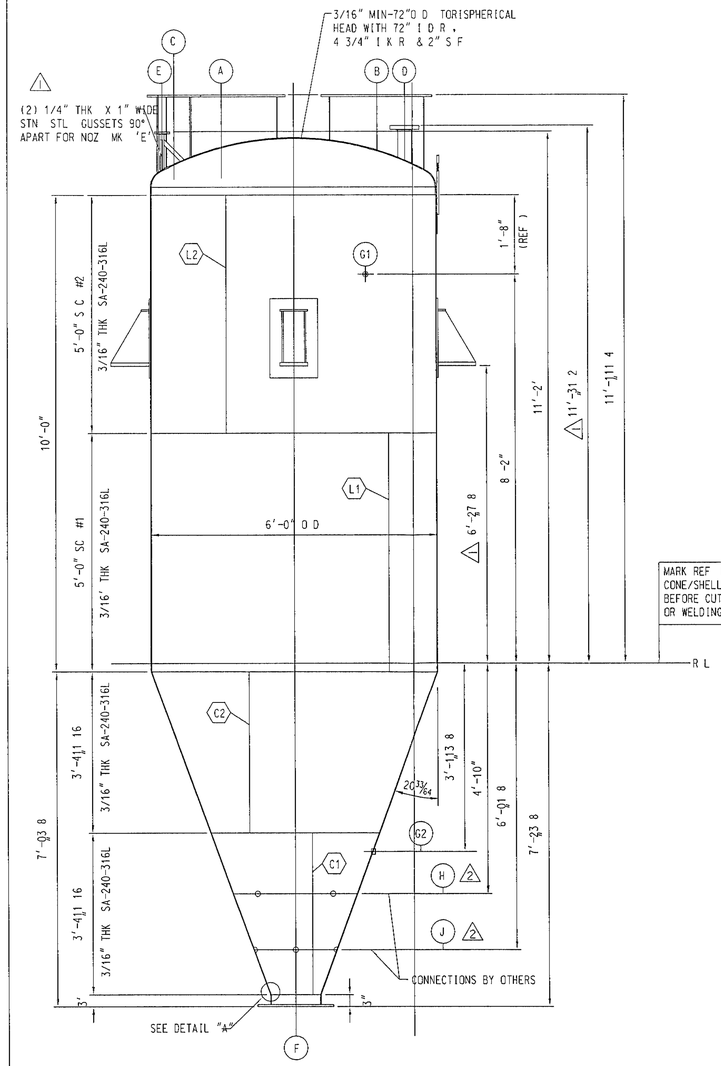

ELEVATION

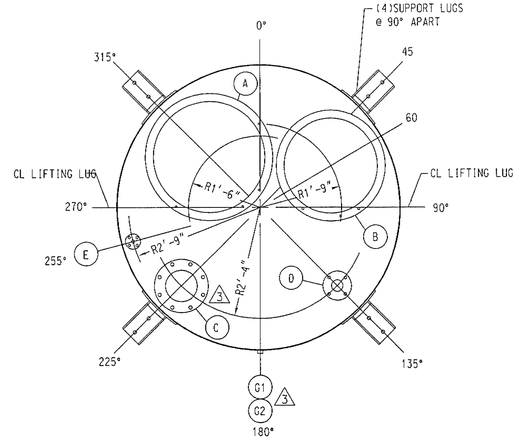

TOP VIEW

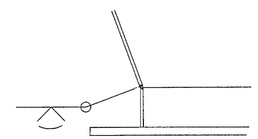

DETAIL "A"

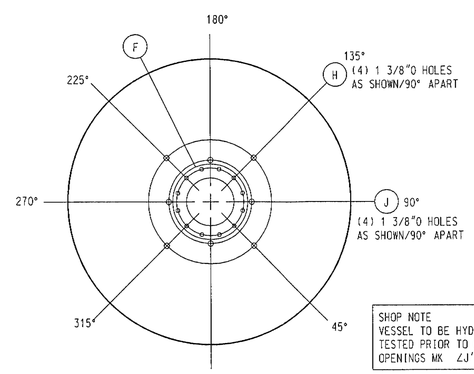

BOTTOM VIEW

SHOP NOTE
VESSEL TO BE HYDROSTATICALLY TESTED PRIOR TO CUTTING OPENINGS MK 'J' & 'H'

NOZZLE SCHEDULE

MK	NO	SERVICE	SIZE	FLANGE RATE	FLANGE TYPE	PIPE SCH	REPAD THK	REPAD O D	PROJ O S	PROJ I S	WELD DTL DRAWING	WELD DTL	WELD SIZE a	WELD SIZE b	WELD SIZE c
A	1	BIN VENT	28"		DTL	3/16	-	-	ELEV	-	VII	DTL	1/4"		
B	1	MANWAY	24"		DTL	3/16	-	-	ELEV	-	VII	DTL	1/4"		
C	1	INLET PORT	8"		DTL	40S	-	-	ELEV	-	VII	DTL	1/4"		
D	1	EQUALIZATION POT	3"	150#	RFSO	40S	-	-	ELEV	-	VII	XII	1/4"		
E	1	DRY AIR PURGE	3/4"	150#	RFSO	40S	-	-	ELEV	-	VII	XII	1/4"		
F	1	OUTLET PORT	12"		DTL	10S	-	-	ELEV	-	DTL	DTL	DTL		
G1	1	HIGH LEVEL SWITCH	3/4"	3000#	NPT HALF COUPLING	-	-	-	-	-	VI	-	1/4"		
G2	1	LOW LEVEL SWITCH	3/4"	3000#	NPT HALF COUPLING	-	-	-	-	-	VI	-	1/4"		
H	4	TOP AERATION PAD	1 3/8"	-	OPEN HOLE	-	-	-	-	-	-	-	-		
J	4	LOWER AERATION PAD	1 3/8"	-	OPEN HOLE	-	-	-	-	-	-	-	-		

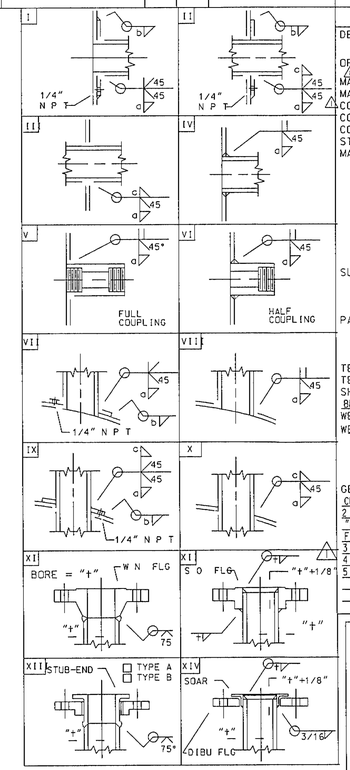

SPECIFICATIONS

DESIGN CONDITIONS (EXT) 0 062 PSIG 650 F°
(INT) 2 5 PSIG 650 F
OPER CONDITIONS - PSIG AT F°
MAWP (CORR COND) 2 5 PSI @ 250 F (LIMITED BY CONE)
MAP (NEW & COLD) 2 5 PSI @ 70°F (LIMITED BY CONE)
CORROSION ALLOWANCE 1/64"
CONTENTS S G =1 LETHAL NO
CODE ASME SECT VIII CODE STAMP YES
STRESS RELIEF NONE RADIOGRAPH NONE
MATERIALS OF CONSTRUCTION
1 SHELL SA-240 316L JOINT TYPE SEAMLESS
2 HEADS SA-240 316L JOINT TYPE SEAMLESS
3 CLADDING LINING OR WEAR PLATE NONE
4 NOZZLES SA-312 TP316L ERW & SA-240 316L
5 REINF PLATE
6 STRUCTURAL SA-240 316L
7 FLANGES SA-182F 316L/SA-240 316L
8 GASKETING 1/8" THK NEOPRENE
9 BOLTING 18-8 STN STL BOLTS
SURFACE PREPARATION
INSIDE REMOVE ALL DEBRI WELD SLAG, SPATTER & GRIND SMOOTH
OUTSIDE SEE NOTE 2
PAINTING
INSIDE NONE
OUTSIDE NONE
TESTING HYDROSTATIC
TEST PRESS 3 8 PSI
SHIPPING PROTECT ALL PARTS FROM SHIPPING DAMAGE FLANGES TO BE ENCLOSED WITH PROTECTIVE COVERS
WELDING PROCESS SEE DWG 9550-1M
WEIGHTS
A SHOP LIFT WT2 734 LBS
B SHOP TEST WT26 328 LBS
C SITE LIFT WT2,734 LBS
D OPER WT (FULL) 26,326 LBS
GENERAL NOTES 1) FLANGE BOLT HOLES SHALL STRADDLE PRINCIPAL CENTERLINES OF VESSEL
2) INTERIOR & EXTERIOR SURFACES SHALL BE CLEANED PER JMW "PROCEDURE FOR DESCALING & CLEANING OF LARGE STAINLESS STEEL FABRICATIONS "
3) MACHINE GASKET SURFACE TO 125-250 RMS
4) GRIND SMOOTH ALL INTERNAL WELDS
5) 100% X-RAY OF HEAD WELD SEAM WHERE LIFTING LUGS GO

CERTIFIED BY
JAMES MACHINE WORKS, INC

W
RT-3

MAWP	2 5	PSI AT	250	F	
	EXT 0 062	PSI AT	250	F	
MIN DESIGN METAL TEMP	10	F AT	2 5	PSI	
MANUFACTURER'S SERIAL NO	6867				
YEAR BUILT	1998				
PURCHASE ORDER NO	017729				
SAP NO ITEM NO	10039886	EMPTY WT	2,734 LBS		

JMW
MONROE, LA

DWG NO	REFERENCES
9550-1A	NOZZLE & MISCELLANEOUS DETAILS
9550-1M	STD JOINT DTL & WELD MAP

NO	REVISIONS	BY	DATE
2	ADDED MARK NUMBERS FOR OPENINGS MK 'H' & 'J' IN ELEVATION	RWT	11-20-98
3	RELOCATED NOZ 'C', 'G1' & 'G2'	RLJ	12-14-98
1	ADDED NOZZLE SERVICE & REV WELD DTL REV CORR ALLOWANCE, GASKETS & BOLTS ADDED GENERAL NOTES REV ITEM NO ADDED GUSSETS @ NOZ 'E'	RWT	11-11-98

SCALE 3/4"=12"		DATE
DRAWN	RLJ	10-20-98
CHECKED	DH	10-26-98
APP'D		
APP'D		
JOB NO 9550		

REV 3 DRAWING NUMBER 9550-1

JAMES MACHINE WORKS
MONROE - LOUISIANA

CUSTOM EQUIPMENT DESIGN, INC
MONROE - LOUISIANA

HOPPER SPECIAL

P O NO 017729 SAP NO 10039886

#93027

NO	GRID	W O NO	B M NO	DESCRIPTION	BY	CHK'D	PROJ MGR	GRP LDR	PLANT ENG'R	DATE

REVISIONS

V-3080 SFRU (2) PRODUCT STORAGE HOPPER STD JOINT & WELD MAP	130 -EQ-347	B M NO	W O NO N51229
V-3080 SFRU (2) PRODUCT STORAGE HOPPER NOZZLE & MISC DETAILS	130 -EQ-346	ACCT NO	EST NO
MS-3355 BIN VENT FILTER	130 -EQ-	DRAWN BY	DATE
MB-66 SFRU (2) TWO POST SUPER SACKER	130 -EQ-348	CHECKED BY MGC	DATE 10/98
	- -	PROJECT ENGINEER ACP	DATE 10/98
	- -	GROUP LEADER	DATE
		PLANT ENGINEER	DATE

REFERENCE DRAWINGS

Hoechst Celanese
ENGINEERING PLASTICS DIVISION
BISHOP, TEXAS
ENGINEERING DEPARTMENT

THIS DRAWING IS THE PROPERTY OF AND CONTAINS CONFIDENTIAL AND PROPRIETARY INFORMATION BELONGING TO THE ENGINEERING PLASTICS DIVISION OF HOECHST CELANESE CORPORATION IT MUST BE RETURNED IMMEDIATELY AFTER COMPLETION OF USE OR UPON REQUEST AND MUST NOT BE COPIED IN WHOLE OR IN PART NOR THE INFORMATION SHOWN THEREON DISCLOSED TO THIRD PARTIES OR OTHERWISE USED EXCEPT WITH SPECIFIC WRITTEN PERMISSION OF HOECHST CELANESE CORPORATION

Hoechst

TITLE
V-3080 SFRU(2) PRODUCT STORAGE HOPPER NOZZLE ARRANGEMENT & MISC. DETAILS

AREA	UNIT	SCALE	DRAWING NUMBER
130	SFRU		
TYPE OF DRAWING	EQUIPMENT	NTS	130-EQ-345

CAED NO 0130 Q 040

0130Q040 m was plotted by BISNAS on Tuesday March 16 1999 at 02 55 44 PM CST from BIS1909