D2001 NB-81

FORM U-1 MANUFACTURERS' DATA REPORT FOR PRESSURE VESSELS #91686

as required by the provisions of the ASME Code rules, Section VIII, Division 1

1. Manufactured and certified by Pfaudler (United States), Inc., 1000 West avenue, Rochester, NY 14692
(name and address of manufacturer)

2. Manufactured for Polaroid Corp., Waltham, MA
(name and address of purchaser)

3. Location of installation Polaroid Corp., Waltham, MA
(name and address)

4. Type: Vertical (horiz. or vert., tank) | R188-0085 (mfr's. serial no.) | *NA (CRN) | R188-0085 (drawing no.) | 44831 (Nat'l. Bd. no.) | 1988 (year built)

5. The chemical and physical properties of all parts meet the requirements of material specifications of the ASME BOILER AND PRESSURE VESSEL CODE. The design, construction and workmanship conform to ASME Code, Section VIII, Division 1: 1986 (year),

1986 (addenda (date)) | CC1970 (Code Case no.) | NA (special service per UG-120(d))

Items 6-11 inclusive to be completed for single wall vessels, jackets of jacketed vessels, or shells of heat exchangers.

6. Shell: SA 516 Gr. 70 (mat'l. (spec. no., grade)) | 3/8" (nom. thickness (in.)) | 0 (corr. allow. (in.)) | 5' 5¼" (dia. ID (ft. & in.)) | 6' 4" (length (overall) (ft. & in.))

7. Seams: #1, UW-12 (long. (dbl., sngl.)) | None (RT (spot or full)) | 70 (eff. (%)) | NA (HT temp. (°F)) | NA (time) | #1&2, UW-12 (girth (dbl., sngl.)) | None (RT(spot, partial, or full)) | 1 (no. of courses)

8. Heads: (a) NA (mat'l. (spec. no., grade)) (b) SA 516 Gr. 70 (mat'l. (spec. no., grade))

	Location (top, bottom, ends)	Minimum Thickness	Corrosion Allowance	Crown Radius	Knuckle Radius	Elliptical Ratio	Conical Apex Angle	Hemispherical Radius	Flat Diameter	Side to Pressure (convex or concave)
(a)	NA	NA	NA	NA	NA	NA	NA	NA	NA	NA
(b)	Bottom	7/16"	0	66"	4"	NA	NA	NA	NA	Concave

If removable, bolts used (describe other fastenings): NA (mat'l., spec. no., gr., size, no.)

9. Type of jacket: Fig. 9-2 Type 5 Proof test: NA

10. Jacket closure: Fig. 9-5 (b-2) (describe as ogee & weld, bar, etc.) If bar, give dimensions: NA If bolted, describe or sketch.

11. MAWP: 90/90 w/FV (psi) at max. temp. 450 (°F). Min. temp.: NA (when less than -20°F). Hydro., ~~pneu. or comb.~~ test press.: 135 (psi).

Items 12 and 13 to be completed for tube sections.

12. Tubesheets: (Items 12 and 13 not applicable.) (stationary mat'l. (spec. no., gr.)) (dia. (in.) (subject to pressure)) (nom. thickness (in.)) (corr. allow. (in.)) (attachment (welded, bolted))

(floating mat'l. (spec. no., gr.)) (dia. (in.)) (nom. thickness (in.)) (corr. allow. (in.)) (attachment)

13. Tubes: (mat'l. (spec. no., gr.)) (OD (in.)) (nom. thickness (in. or gauge)) (no.) (type (straight or U))

Items 14-17 inclusive to be completed for inner chambers of jacketed vessels or channels of heat exchangers.

14. Shell: SA 285 Gr. C (mat'l. (spec. no., gr.)) | 11/16" (nom. thickness (in.)) | 0 (corr. allow. (in.)) | 5' 0" (dia. ID (ft. & in.)) | 5' 8" (length (overall) (ft. & in.))

15. Seams: #1, UW-12 (long. (dbl., sngl.)) | None (RT (spot or full)) | 70 (eff. (%)) | NA (HT temp. (°F)) | NA (time) | #1, UW-12 (girth (dbl., sngl.)) | None (RT (spot, partial, or full)) | 1 (no. of courses)

16. Heads: (a) SA 285 Gr. C (mat'l. (spec. no., grade)) (b) SA 285 Gr. C (mat'l. (spec. no., grade))

	Location (top, bottom, ends)	Minimum Thickness	Corrosion Allowance	Crown Radius	Knuckle Radius	Elliptical Ratio	Conical Apex Angle	Hemispherical Radius	Flat Diameter	Side to Pressure (convex or concave)
(a)	Top	5/8"	0	NA	NA	2:1	NA	NA	NA	Both
(b)	Bottom	5/8"	0	NA	NA	2:1	NA	NA	NA	Both

If removable, bolts used (describe other fastenings) NA (mat'l., spec. no., gr., size, no.)

17. MAWP: 100/FV (psi) at max. temp. 450 (°F). Min. temp.: NA (when less than -20°F). Hydro., ~~pneu. or comb.~~ test press.: 100 (psi).

Items on reverse side to be completed for all vessels where applicable.

Copy To [illegible] 6-8-86

Pfaudler Serial No.: R188-0085 Customer Order No.: 8879101

FORM U-1 (back)

18. Nozzles, inspection and safety valve openings:

Purpose (inlet, outlet, drain, etc.)	Number	Dia. or Size	Type	Mat'l.	Nom. Thickness	Reinforcement Material	How Attached	Location
Manhole	1	30"	Clmp Flg	SA 836	.56"	Integral	W	NA
Inlet	5	4"8"	LJ Flg	SA 836	CL 150	Integral	W	NA
Outlet	1	4"	LJ Flg	SA 836	CL 150	Integral	W	NA
Jkt Conn	10	1½"2"3"	Scd Cplg	SA 216 Gr. WCA	3000#	Integral	W	NA
Jkt Conn	2	½"	Scd Cplg	SA 105	3000#	Integral	W	NA

19. Supports: Skirt No (yes or no) Lugs 4 (no.) Legs 0 (no.) Other NA (describe) Attached Welded to jacket shell (where and how)

20. **Remarks:** Manufacturers' Partial Data Reports properly identified and signed by Commissioned Inspectors have been furnished for the following items of the report: NA (name of part, item number, mfr's. name and identifying stamp)

Model RA60-1000, 1000 gallon jacketed glassed steel vessel for chemical service.
Inner vessel hydrotested in vertical position.

(*not applicable)

CERTIFICATE OF SHOP COMPLIANCE

We certify that the statements made in this report are correct and that all details of design, material, construction and workmanship of this vessel conform to the ASME Code for Pressure Vessels, Section VIII, Division 1.

"U" Certificate of Authorization no. 408 expires 12-31, 19 88.

Date 4/15/88 Name Pfaudler (United States), Inc. (manufacturer) Signed [signature] (representative)

CERTIFICATE OF SHOP INSPECTION

Vessel constructed by Pfaudler (United States), Inc. at Rochester, NY.

I, the undersigned, holding a valid commission issued by The National Board of Boiler and Pressure Vessel Inspectors and the state or province of New York and employed by Hartford Steam Boiler I. & I. Company of Hartford, CT have inspected the pressure vessel described in this Manufacturers' Data Report on 4/18, 19 88, and state that, to the best of my knowledge and belief, the manufacturer has constructed this pressure vessel in accordance with ASME Code, Section VIII, Division 1.

By signing this certificate neither the inspector nor his employer makes any warranty, expressed or implied, concerning the pressure vessel described in the Manufacturers' Data Report. Furthermore, neither the inspector nor his employer shall be liable in any manner for any personal injury or property damage or a loss of any kind arising from or connected with this inspection.

Date 4/18/88 Signed Russell B. Miller (Authorized Inspector) Commissions N.B.# 6658 (Nat'l. Bd. (incl. endorsements) state, prov. and no.)

CERTIFICATE OF FIELD ASSEMBLY COMPLIANCE

We certify that the field assembly construction of all parts of this vessel conforms with the requirements of Section VIII, Division 1 of the ASME BOILER AND PRESSURE VESSEL CODE.

"U" Certificate of Authorization no. _____ expires _____, 19 _____.

Date _____ Name _____ (assembler that certified and constructed field assembly) Signed _____ (by representative)

CERTIFICATE OF FIELD ASSEMBLY INSPECTION

I, the undersigned, holding a valid commission issued by The National Board of Boiler and Pressure Vessel Inspectors and the state or province of _____ and employed by _____ of _____ have compared the statements in this Manufacturers' Data Report with the described pressure vessel and state that parts referred to as data items _____, not included in the certificate of shop inspection, have been inspected by me and that to the best of my knowledge and belief, the manufacturer has constructed and assembled this pressure vessel in accordance with ASME Code, Section VIII, Division 1. The described vessel was inspected and subjected to a hydrostatic test of _____ psi.

By signing this certificate neither the inspector nor his employer makes any warranty, expressed or implied, concerning the pressure vessel described in the Manufacturers' Data Report. Furthermore, neither the inspector nor his employer shall be liable in any manner for any personal injury or property damage or a loss of any kind arising from or connected with this inspection.

Date _____ Signed _____ (Authorized Inspector) Commissions _____ (Nat'l. Bd. (incl. endorsements) state, prov. and no.)

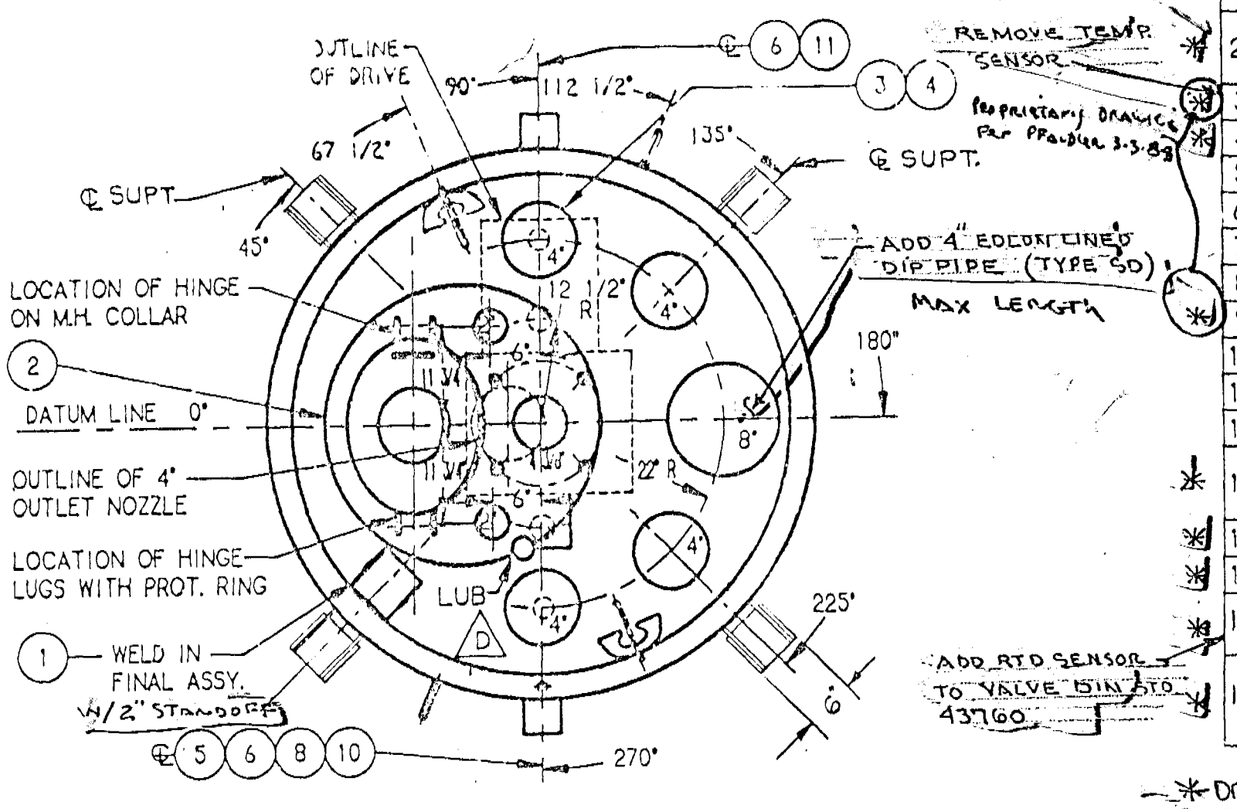

REF. NO.	NO. REQD.	PART NO.	PFI EQUIV. NO.	DESCRIPTION
1	1	3106780	3106780	NAMEPLATE ASSY ADD 2" STANDOFF
2	1	3144112	3131111	COV. ASSY, 30" GL., W/14"X18" M.H.NUC. & PROT. RING, NUC. & SG
3	1	3153437	3142178	BAF., "H" W/.765" REST. TIP, NUC.
4	1	3127895	3127895	GUIDE & STUFF. BOX ASSY FOR BAF.
5	1	1603617	-------	PLUG, 3000#, 1/2"
6	2	1603623	-------	PLUG, 3", 3000#
7	1	3146113	3146113	JCW, 60" x 72"
8	3	1603621	-------	PLUG, 1 1/2", 3000#
9	1	3135090	3135080	AGIT., 44"SPAN, 3 BL., NUC.
10	1	1603622	-------	PLUG, 2", 3000#
11	3	1130041	1130041	NOZ., AGIT., 1 1/2"
12	4	3133537	3133537	SIDE SUPT.
* 13	1	3517929	3530007	DRIVE ASSY., 5RWFFG.
* 14	1	3512401	3512320	PED. & SEAL ASSY,3 1/2"W/NUC. SEAT
* 15	1	3512641	3512640	LUBRICATOR, R.H.
* 16	1	2111105	2111103 3153495	VALVE FLUSH, 4 x 3, 150LB W/AIR ACTUATOR & LIMIT SWITCH
* 17	1	3520752	3515054	MOTOR, 5HP, 1800 RPM, 3/60/ W/THERMOSTAT FOR VARI. FREQ PWM CONTR. ER CLI GR D, 213TDZ.

* DRAWING REQUESTED

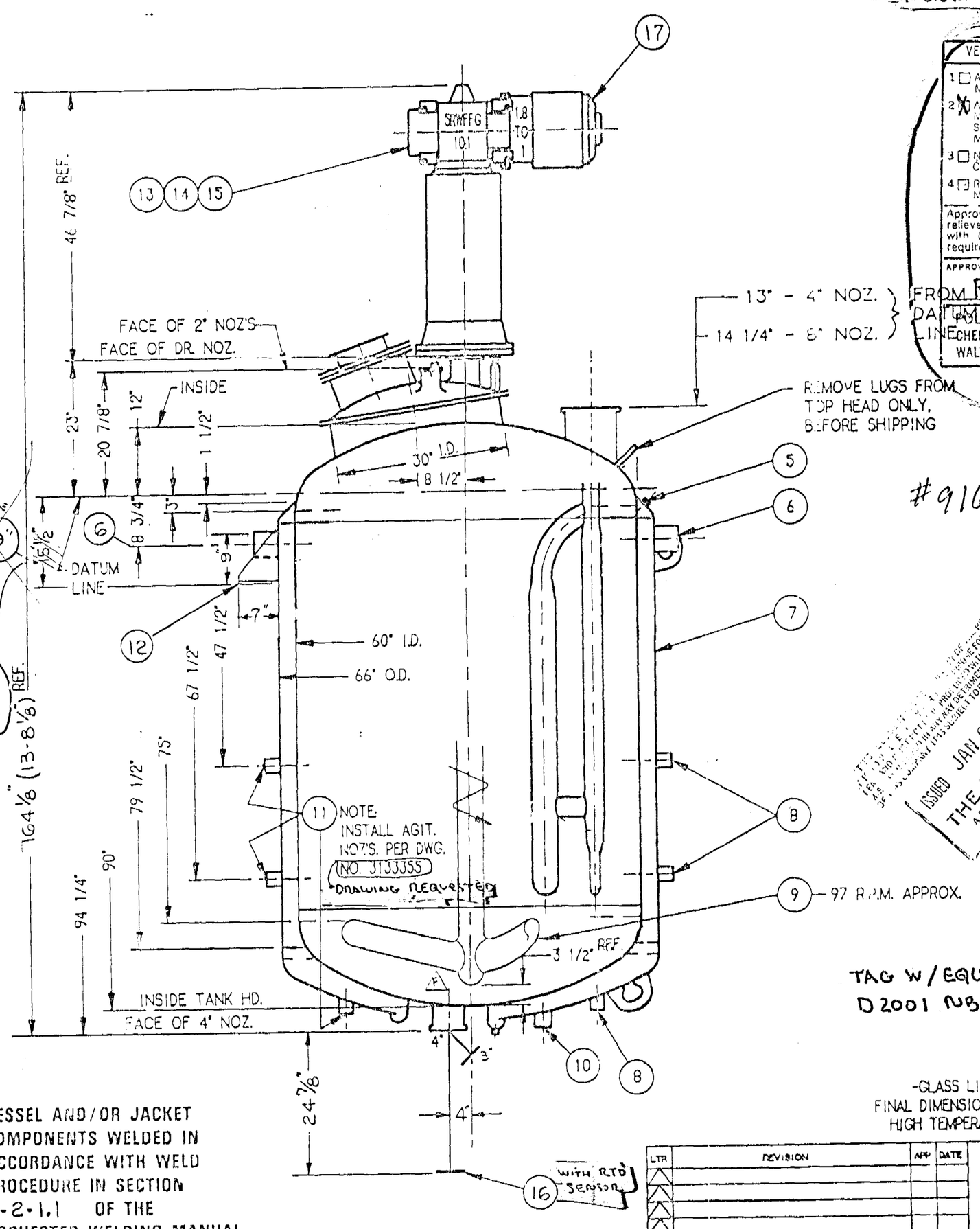

VENDOR'S DRAWING REVIEW

1 ☐ Approved — Manufacturing may proceed.
2 ☒ Approved except as noted — Make changes and Submit final drawing — Manufacturing may proceed.
3 ☐ Not Approved — Correct and resubmit.
4 ☐ Review not required — Manufacturing may proceed.

Approval of this drawing does not relieve Supplier from full compliance with Contract or Purchase Order requirements.

APPROVED DATE

FROM R. Whalen 2-11-88

POLAROID CORPORATION
CHEM. ENG. DEPT.
WALTHAM, MASS.

#91686

BASE MATERIAL	
VESSEL	SA-285, GR.C
JACKET	SA-515, GR.65 (or) SA-516, GR 70
SEALER	SA-515, GR.65 (or) SA-516, GR 70

THICKNESSES	VESSEL	JACKET
HD.-TOP/FRONT	5/8" S.E.	
HD.-BOT./REAR	5/8" S.E.	7/16" F&D
SHELL	11/16"	3/8"
SEALER		3/8"

DESIGN & INSPECTION		
SPECIFICATION	VESSEL	JACKET
ASME CODE DESIGN & STAMP	YES	YES
DESIGN PRESS. PSI	100/FV	90/90*
DESIGN TEMP. °F.	450°	450°
HYDRO TEST PSI	100	135
RADIOGRAPH	NO	NO
HEAT TREAT. SPEC NO.		

SEE OPERATING LIMITATIONS, INSTALLATION & MAINTENANCE INSTRUCTIONS P.I.M. 81-109

FOR INSTALLATION IN AREAS NOT SUBJECT TO WIND OR SEISMIC LOADS, SPECIFIC GRAVITY OF VESSEL CONTENTS NOT TO EXCEED 1.2

FV=FULL VACUUM
* WITH FULL VACUUM IN VESSEL

VESSEL FINISH & ACCESSORY MATL'S.		
VESSEL	5015	
ACCESSORIES	AS SPECIFIED	
PLUGS	TANTALUM	
FILLER	FURAN	
GASKETS	CRT-AF	REFERENCES
PAINT	PFAUDLER	AE-7049
	BLUE PER DATA	3131581
	SH. 159	3133165
CAP. RATED	1,000 GAL.	3133350
CAP. FULL	1,125 GAL.	3136248
WT. UNJKTED	5,000#	3142043
WT. JKTED	7,350#	
WT./ACCS.	9,500#	
		PROD. CODE#

SEND DATA SH 159

TITLE
RA-60-1000 REACTOR
60" x 72" JCWVA

CUSTOMER POLAROID CORP.
ADDRESS 100 Duchaine Blvd.
CONSIGNED New Bedford, Mass.
ADDRESS SAME
CUST. ORDER NO. 879101

THIS DRAWING IS THE PROPERTY OF THE PFAUDLER CO. IT IS NOT TO BE USED FOR WHICH IT WAS NOT SPECIFICALLY PROCURED, NOR REPRODUCED IN ANY WAY WITHOUT WRITTEN PERMISSION, NOR SUBMITTED TO ANY PERSON OR ORGANIZATION WITHOUT PRIOR WRITTEN PERMISSION OF THE PFAUDLER CO. IT IS SUBMITTED TO THE INTEREST OF THE PURCHASER AND MUST BE RETURNED UPON REQUEST.

ISSUED JAN 22 1988
THE PFAUDLER CO.
A DIVISION OF CORPORATION
ROCHESTER, N.Y.

TAG W/EQUIPMENT
D2001 NB-B1

-GLASS LINED EQUIPMENT-
FINAL DIMENSIONS MAY VARY DUE TO HIGH TEMPERATURE PROCESSING.

VESSEL AND/OR JACKET COMPONENTS WELDED IN ACCORDANCE WITH WELD PROCEDURE IN SECTION D-2-1.1 OF THE ROCHESTER WELDING MANUAL

LTR	REVISION	APP	DATE

PFAUDLER
ROCHESTER, N.Y.

APPROVAL
R188-0085
FOR APP'L - REVIEW 1/3