MATL	WT KG. ROUGH	WT KG. FIN.	QTY	SYMBOL	DESCRIPTION	PT

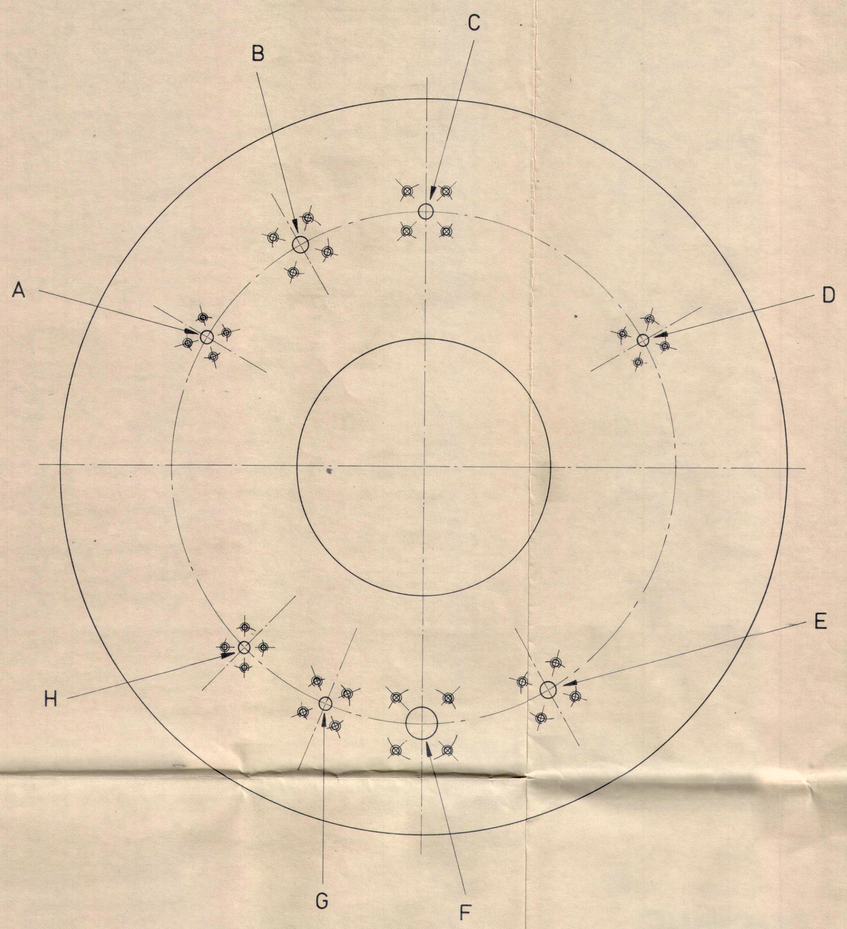

VIEW N_N

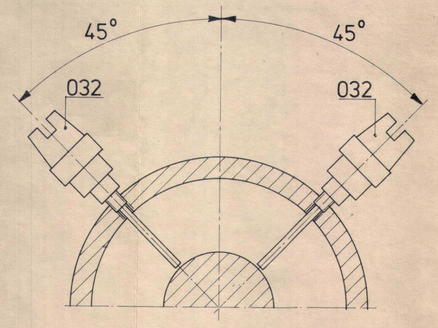

SECTION M_M

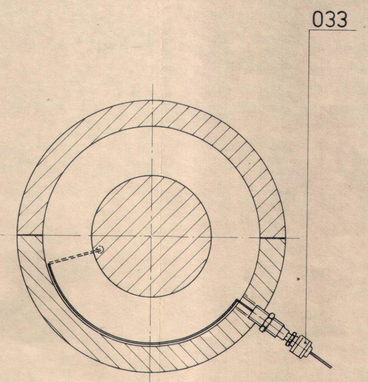

SECTION L_L

NOTE, QUALITY PLAN: C0261 05 M000

SL : VISUAL INSPECTION
PL : MECHANICAL RUNNING TEST (SEE TEST AGENDA)
SL : INSPECTION OF BEARINGS AFTER RUNNING TEST
SL : FINAL INSPECTION BEFORE DESPATCH
L : PERFORMANCE TEST (OPEN AIR ACC. ASME PTC.10)
PL : SPARE ROTOR FIT IN & MECHANICAL RUN. BEFORE MAIN ROTOR
L : LEAK TEST WITH AIR (SOAP BUBBLE)
ACC. DLS SPEC. A7835.097
PRESSURE : 27,5 BARG.
MEDIUM : AIR
DURATION : MIN. ½ HOUR.

DELAVAL-STORK V.O.F.
THIS DRAWING IS FOR:
☐ INFORMATION ONLY.
☐ APPROVAL PRIOR TO MANUFACTURE OR PURCHASE OF MATERIAL. (REQUIRED BY TO ASSURE MAINTAINING PRESENT SCHEDULE.)
☐ RECORD APPROVAL ONLY.
☒ FINAL DISTRIBUTION.
☐
DATE: 07 JUL 1982
SIGN.:

CJB (PROJECTS) LTD.
FINAL DRAWING
SIGNATURE: DATE: 15/7/82

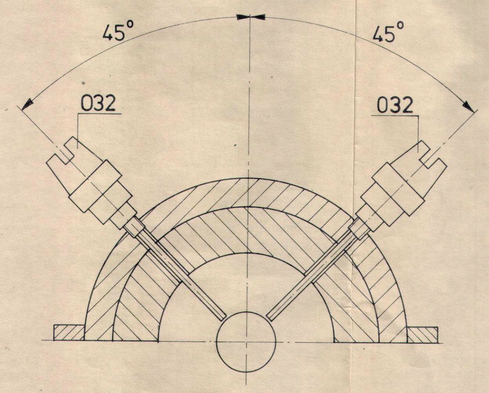

SECTION K_K

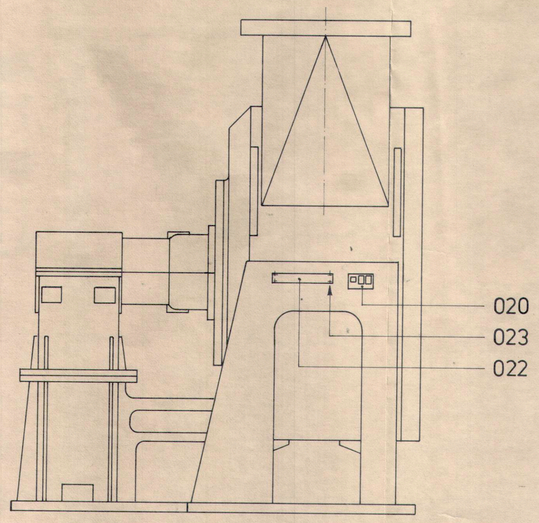

OUTLINE

	REF.	CONNECTION	SIZE
	A	REFERENCE LINE (GAS)	1/2"_ANSI_300 LBS_FF
	B	SEAL OIL SUPPLY	1"_ANSI_300 LBS_FF
	C	BUFFER GAS	1"_ANSI_300 LBS_FF
	D	PURGE (ONLY CONNECTION)	3/4"_ANSI_150 LBS_FF
	E	SEAL OIL CONTROL	1"_ANSI_300 LBS_FF
	F	L.P. SEAL OIL DRAIN	2"_ANSI_150 LBS_FF
	G	H.P. SEAL OIL DRAIN	3/4"_ANSI_300 LBS_FF
	H	LUB. OIL SUPPLY RAD. BEARING	1/2"_ANSI_150 LBS_FF
	J	CASE DRAIN	1"_ANSI_300 LBS_RF
	K	RAD. BEARING DRAIN	2"_ANSI_150 LBS_FF
	L	AX. BEARING DRAIN	3"_ANSI_150 LBS_RF
	M	LUB. OIL SUPPLY AX./RAD. BEARING	1 1/2"_ANSI_150 LBS_FF
	N	RAD. BEARING DRAIN	1 1/2"_ANSI_150 LBS_FF
	O	PURGE (ONLY CONNECTION)	3/4"_ANSI_150 LBS_RF

CJB (PROJECTS) LTD
FOR GREEK PETROCHEMICAL S.A.
PETROCHEMICAL COMPLEX
ACHELOOS ESTUARY _ GREECE
ITEM NR. C 430
DLS ORDER NR. LC 0261
CJB PROJECT NR. 4110
CJB PURCHASE ORDER NR. 4110/A/4/30/01
CJB DWG NR. 4110/C - 430 / 39A

CHG	ZONE	ALTERATIONS	DATE	BY	CHK	WHY	BEDR

0 1 2 3 4 5 6 7 8 9 10 cm.

CERT. FOR CONSTR.: C. Kamp
SEE A0621.2 FOR TOL'S ETC. NOT SPECIFIED

103848
HENGELO (OV.)
NETHERLANDS

FIRST ORDER LC_0261
REF. DWG: C0240 20B500
PROJ. METHOD:

TITLE: COMPRESSOR ASS'Y PV52

DRAWN	G.S.	Mrt.'82	SCALE: 1:5	1:20
CHK.	P.H.	18 MEI '82	SHEET NO.	2 OF 2
ISSUED	C.J.K.	19-5-82	NO.	C.0261 20B500
PVB.	GER.TEK.			

COPYRIGHT IS RESERVED BY LAW. DLS - EC 2811