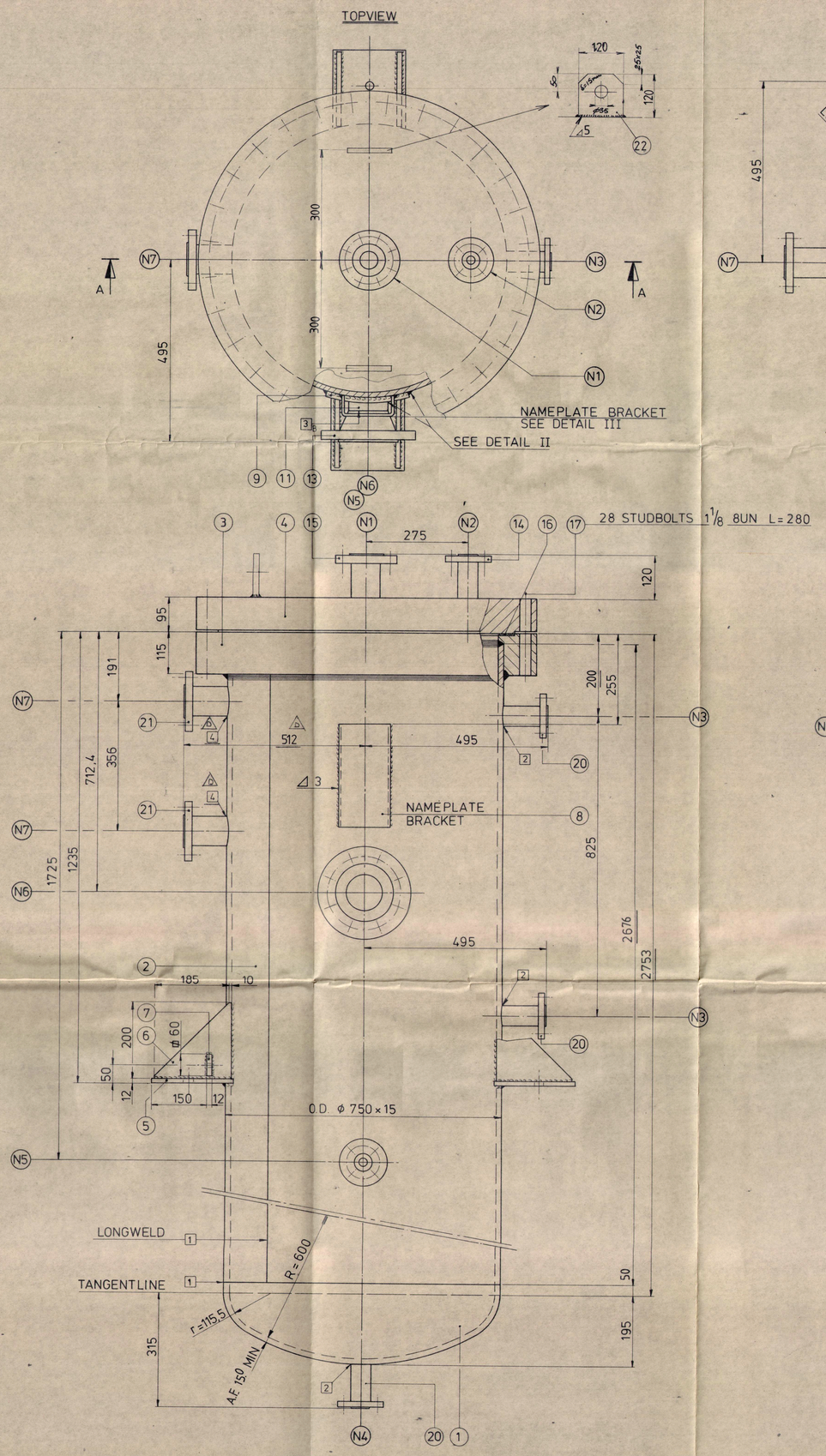

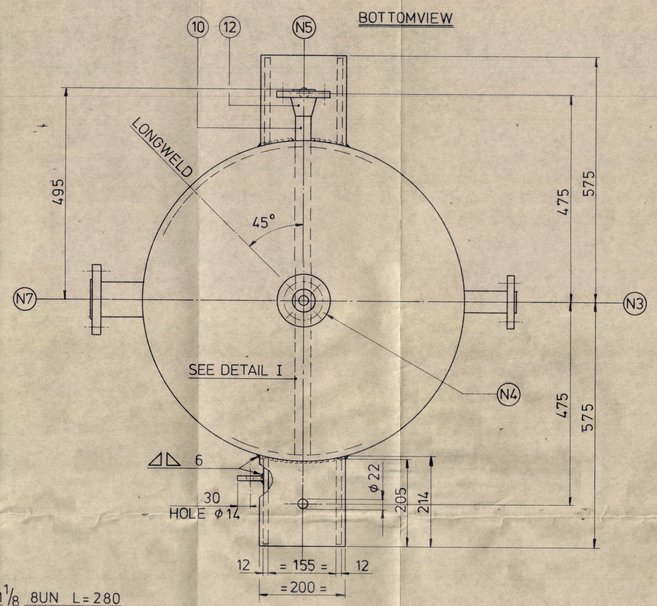

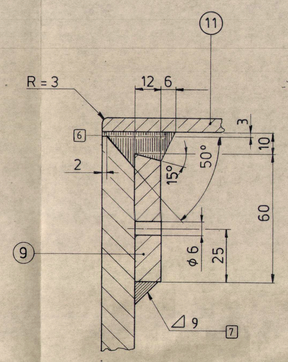

DETAIL II SCH 1:1

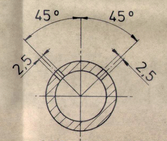

SECTION B - B SCH 1:1

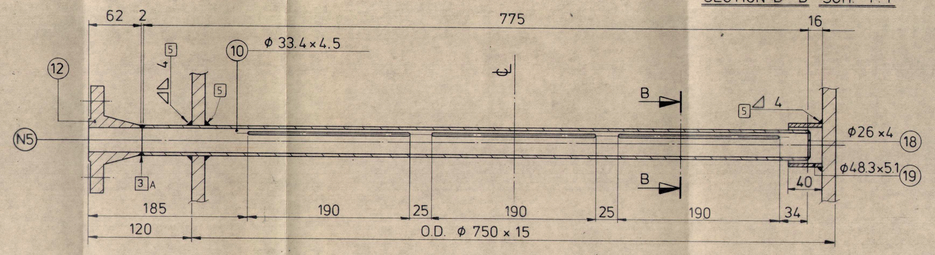

DETAIL I SCH 1:2.5

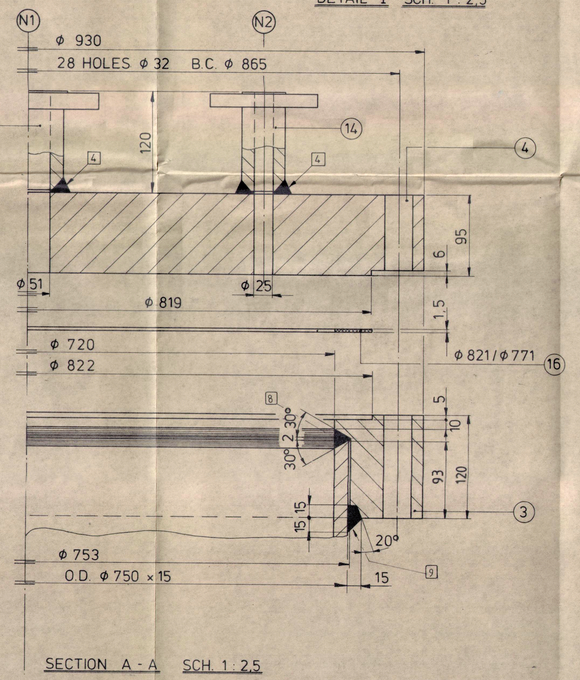

SECTION A - A SCH 1:2.5

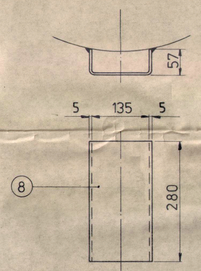

DETAIL III
NAMEPLATE BRACKET

WELD	WPS no
1	12.008 B
2	24.007 A
3 A	11.202 A
3 B	11.204 D
4	24.006 F
5	23.002 A
6	30.007 A
7	30.306 A
8	11.007 A
9	26.007 A

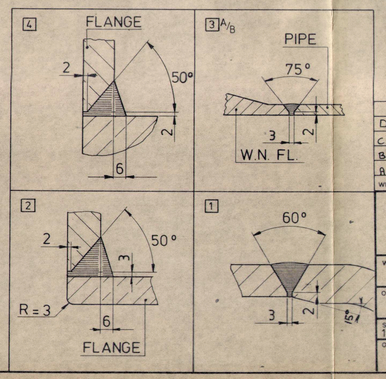

DESIGN DATA

DESIGN CODE	ASME VIII • 5860 - 1110/1 • SUPPLEMENT • 5860-1100/1	
INSPECTION	DLS / CJB	
DESIGN PRESSURE	34.1	barg
DESIGN TEMPERATURE	80	°C
OPERATING PRESSURE	21	barg
OPERATING TEMPERATURE	60	°C
SHOP TEST PRESSURE	51 AT 15°C min.temp.	barg
STRESS RELIEF	NO	
RADIOGRAPHY	100 % X-RAY	
CORROSION ALLOWANCE	1.5 mm	
INSULATION	NO	
EXTERNAL PAINTING	YES (SEE BELOW)	
S.G. OPERATING LIQUID		
M.A.W.P. HOT & CORRODED		
EST WEIGHT - EMPTY	1750 Kg	
EST WEIGHT - OPER / TEST	2950 Kg	
FLUID	SHELL ONDINA 32 OIL	
CAPACITY	1200	LTR

MATERIALS FOR CONSTRUCTION

SHELL	H II acc DIN 17155	C MAX 0.25 %
HEADS	H II acc DIN 17155	C MAX 0.25 %
FORGED FLANGES	A 105-N	C MAX 0.25 %
BLIND FLANGES		
NOZZLES-PIPE	ASTM A106 Gr B	C MAX 0.25 %
FITTINGS	ASTM A105 AND A106	C MAX 0.25 %
SUPPORTS	H II acc DIN 17155	C MAX 0.25 %
REINFORCING PADS	H II acc DIN 17155	C MAX 0.25 %
MISC. EXTERNAL STEEL	H II acc DIN 17155	C MAX 0.25 %
EXT. INTER BOLTS	ASTM A 193 Gr. B7	
EXT. INTER NUTS	ASTM A 194 Gr. 2H	
GASKETS	CAF	
COUPLINGS & PLUGS		
FLAT FLANGES	H II DIN 17155	C MAX 0.25%

NOZZLE SCHEDULE

ITEM Nº		SIZE	RATING	FLANGE	NECK THK	PROJTOL	DESCRIPTION
N1	1	2"	300#	LWN	15.85		
N2	1	1"	300#	LWN	14.3		SAF RELIEF VAL.
N3	2	1"	300#	LWN	14.3	495	LEV. GAUGE
N4	1	1"	300#	LWN	14.3		
N5	1	1"	300#	WN	6.35	495	
N6	1	4"	300#	WN	8.6	495	LEV. SWITCH
N7	2	2"	300#	LWN	15.85	495	LEV. TRANSM. CONTR.

REMARKS

- BOLTHOLES STRADDLE TO NORMAL CENTERLINES
- DIMENSIONS IN MM UNLESS OTHERWISE NOTED
- ONE HARDNESS MEASUREMENT TO BE PERFORMED ON 10 % OF LONGITUDINAL GIRTH AND NOZZLE TO SHELL SEAMS (MAX 225 HBN)
- FLANGES TO ANSI B 16.5 (1977)
- FLANGEFACING STOCKFINISH

SURFACE PREPARATION

Inside : shotblasting SA 2 1/2
grease oil Shell Ondina 32 (before hydrostatic test)

Outside : shotblasting SA 2 1/2
a) mobil zinc Uni Pak (13G 10) P 101 60
b) mobil 37 F 209 P 204 40 RAL 6011 (green)
c) mobil 37 F 209 P 204 40 RAL 6011 (green)

CJB (PROJECTS) LTD
FOR GREEK PETROCHEMICAL S.A.
PETROCHEMICAL COMPLEX
ACHELOOS ESTUARY GREECE
ITEM NR. C 430
DLS ORDER NR. LC 0261
CJB PROJECT NR. 4110
CJB PURCHASE ORDER NR. 4110/A/4/30/01
CJB DWG NR. 4110/C - 430 /45C

CJB (PROJECTS) LTD.
FINAL DRAWING
SIGNATURE DATE 5/10/82

WUZ	DATUM	OMSCHRIJVING	GET.	GEC
D	7.9.82	SET ON FLANGES U7 - 512	J.V.	
C	13-07-82	welds/WPS nº corrected, notes added	L.K.	
B	17-06-82	remarks DLS	L.K.	
A	09-06-82	painting added, remarks DLS, Item pos 3 item pos 15 min.	L.K.	

B. Jansen & Zn. Constructiewerkplaats en Machinefabriek B.V.
BERGEN OP ZOOM

WERK: DELAVAL STORK
D.L.S. Drawing no: C 0261.57.F 425
ONDERWERP: SEAL OIL OVERHEAD TANK (1200 LTR)

SCHAAL	DATUM	GETEK.	GECONTR.
1:1 1:2.5 1:5	19-5-1982	C.J.	

ORDER NO. 82181 | TEK. NO. E-4156-02 | WUZ D