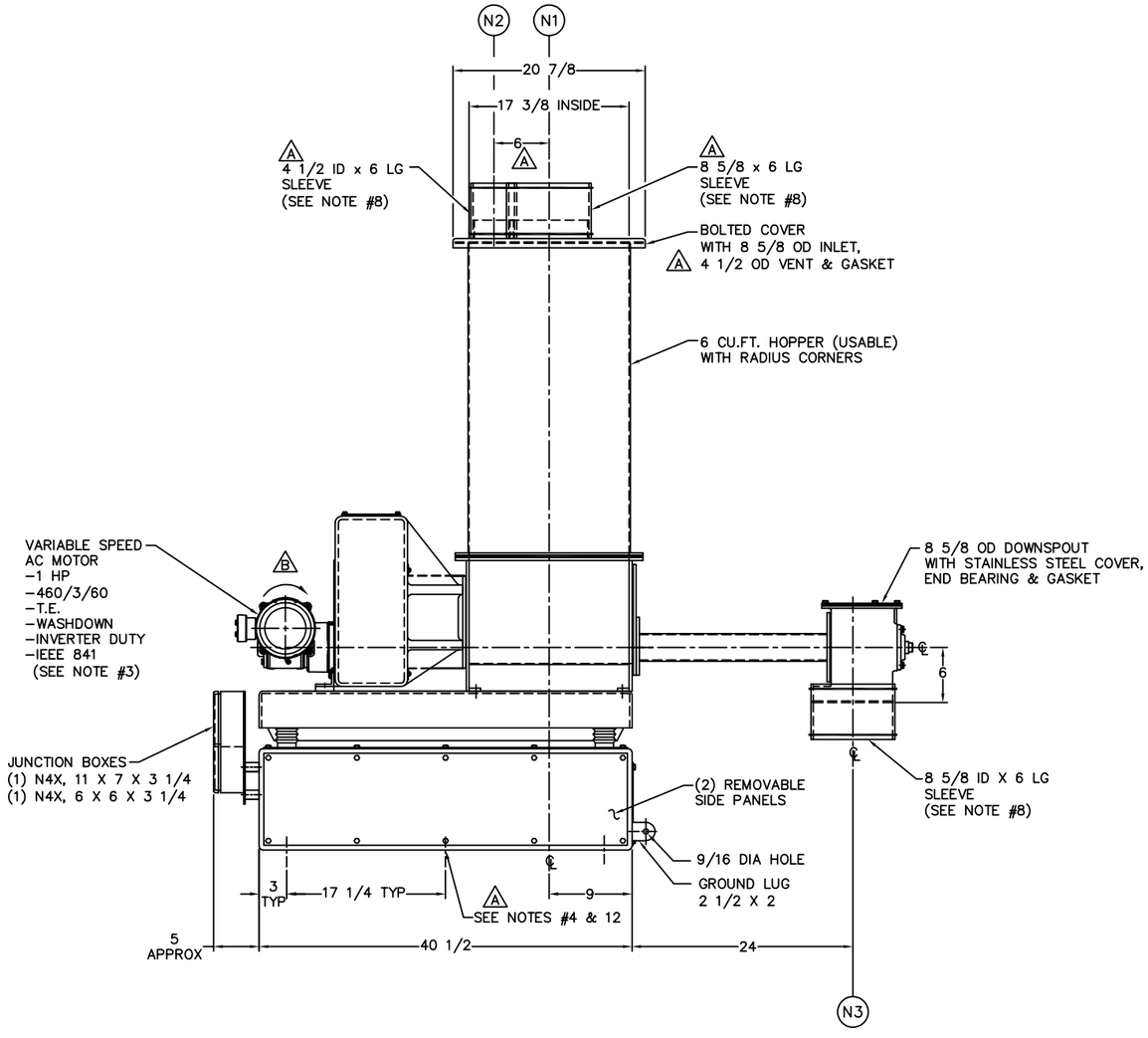

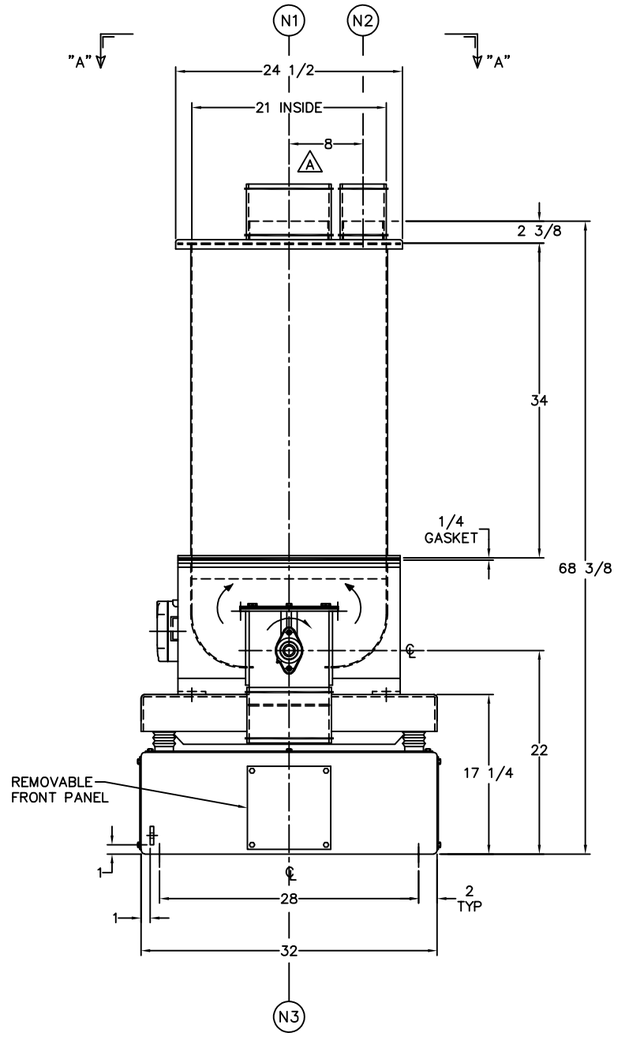

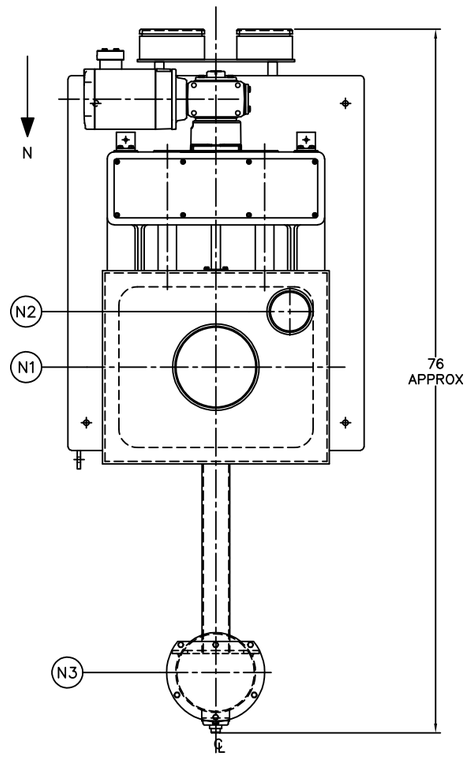

VIEW "A"–"A"

NOTES:
1–APPROX. WEIGHT: 1800 LBS. (EMPTY).
2–ALL CONTACT MATERIAL TO BE 304 STAINLESS STEEL EXCEPT FOR THE DOWNSPOUT WHICH IS 316 STAINLESS STEEL.
3–FEEDER CONTROLS FURNISHED BY ACRISON SHIPPED SEPARATELY.
4–(6) 1" DIA. HOLES FOR SECURING.
5–ALL DIMENSIONS ARE IN INCHES UNLESS OTHERWISE NOTED.
6–INTERNAL HOPPER PRESSURE MUST NOT VARY DURING OPERATION.
7–ANY CONNECTION TO THE SCALE MUST NOT IMPAIR MOVEMENT.
8–SLEEVES TO BE FLEXIBLE WHITE WOVEN SYNTHETIC CLOTH WITH (2) STAINLESS STEEL CLAMPS.
9–REFILL FEEDER OUTLET TO BE NO MORE THAN 1 FT ABOVE INLET.
10–ALL NON–STAINLESS STEEL SURFACES TO BE PAINTED ACRISON BLUE EPOXY. TWO COATS OF EACH PRIMER AND FINISH COAT (6–8 MILLS THICKNESS).
11–WEIGH FEEDER MUST BE LIFTED FROM BOTTOM OF STRUCTURE ONLY.
A 12–THE REQUIRED BOLT SIZE TO BE 7/8–9 AND ARE TO BE SUPPLIED BY OTHERS.

STAINLESS STEEL TAG	A
SILICA 607S.1	19–CN–755

PROJECT - WORPAR
ITEM NBR - 607S.1
TYPE - ASSY
eB NBR - 100200448.002
DATE - 08.03.2022

LTR	REVISIONS	DWN	DATE
B	ADDED ROTATION ARROW.	JR/VP	03/02/22
A	ADDED TAG & NOTE #12. DIM. 6 WAS 6 1/2; 8 WAS 8 1/2; 4 1/2 WAS 4;8 5/8 OD WAS 12.	MS/SP	08/30/21

COPYRIGHT 2021 – ACRISON, INC. – ALL RIGHTS RESERVED.

NOTICE: This drawing and the confidential/proprietary information contained herein is the property of Acrison, Incorporated and is loaned to the recipient subject to the condition that it shall not be reproduced, copied, lent, transmitted or otherwise disposed of either directly or indirectly, in whole or in part, without the expressed written consent of Acrison, Incorporated.

If this drawing is for reference purposes only, not for approval, Acrison must be notified at once upon receipt of same with respect to any user safety requirement(s). No safety interlocks are called out on this drawing. The buyer or user is responsible for specifying any safety interlock(s) which the buyer or user may require, with such information brought to the attention of Acrison prior to commencement of manufacture.

All wiring to this equipment must be made by the buyer or user. This includes all interconnections between the equipment and any Acrison supplied control panel(s) as well as any safety switches and/or safety interlocks either required by law or the electrical standards of the user. This equipment is designed to be a component part of a process or system, with equipment connections to the process also the responsibility of the buyer or user.

All Acrison manufactured equipment shall be in compliance with all applicable federal safety laws, rules and regulations. It is the buyer's or user's responsibility to continuously and properly maintain,in their correct position,all guards,covers, enclosures, etc., which are included and/or installed on the machinery, particularly those which act as a shield for rotating components. In addition, all Warning/Caution Labels must be maintained in a readable condition, and if necessary, replaced with new labels. It is also the buyer's or user's responsibility to ensure that the equipment is operated in accordance with the operating instructions (including the Operator Safety Section) of the applicable Acrison Instruction Manual. Specific safety procedures for maintenance, cleaning, etc. of the equipment must be established and enforced by the buyer or user.

Once installed, the buyer or user has sole control over the equipment and shall be solely responsible for safety compliance. The buyer or user shall defend, indemnify and hold Acrison harmless from all claims for liabilities resulting from accidents involving the equipment, due to negligence on the part of the buyer or user.

Acrison®
Acrison, Inc., 20 Empire Blvd., Moonachie, NJ 07074

MODEL 402X–650–250–BDF–1.5–G
GRAVIMETRIC FEEDER
DESMET BALLESTRA NORTH AMERICA S/N:21326–05

SCALE	DWN	DATE	CKD	DATE	DWG. NO.	REV.
1/8=1	JR	05/18/21	VSP	05/18/21	402–1–1866	B

DO NOT SCALE

THIS DRAWING IS THE PROPERTY OF ACRISON, INCORPORATED. ANY DUPLICATION OR DISTRIBUTION WITHOUT THE WRITTEN CONSENT OF ACRISON, INCORPORATED IS PROHIBITED.