NOZZLE DATA:

MARK.	SIZE	RATING	TYPE	FLG. MAT'L	ELEVATION	PROJECTION	NBR.	SERVICE	REMARKS
N1	6"	ASME B16.5 CL.150	SORF	SA182 F304	318 mm 12.52 In	475 mm 18.7 In	1	INLET	–
N2	6"	ASME B16.5 CL.150	SORF	SA182 F304	2027mm 79.8 In	0 mm 0 In	1	OUTLET	–
N3	4"	ASME B16.5 CL.150	SORF	SA182 F304	598 mm 23.54 In	0 mm 0 In	1	CAKE OUTLET	–
N4	1"	ASME B16.5 CL.150	SORF	SA182 F304	152 mm 5.98 In	450 mm 17.72 In	1	VENT	–
N5	2"	ASME B16.5 CL.150	SORF	SA182 F304	1482 mm 58.35 In	505 mm 19.88 In	1	PRESSURE GAUGE	–
N6	1"	NPT-3000#	–	–	1527 mm 60.12 In	410 mm 16.14 In	1	H.L. SWITCH	PLUG OFF
N7	1"	NPT-3000#	–	–	318 mm 12.52 In	134 mm 5.28 In	1	L.L. SWITCH	PLUG OFF

GENERAL DATA:

DESIGN ACC.	: ASME CODE SECTION VIII DIV.1 2019 EDITION (U-STAMP)			
INSPECTION BY	: ABSG			
DESIGN PRESSURE	: -1.03/10.0 Bar(G)		[-14.5/145.04 Psi(G)]	
DESIGN TEMPERATURE	: 0/150 °C		[302 °F]	
TEST PRESSURE	: 13.8 Bar(G)		[200.15 Psi(G) Hydr.]	
M.A.W.P.	: 10.0 Bar(G) at 150 °C		[145.04 Psi(G) at 302 °F]	
M.A.E.W.P.	: 1.0 Bar(G) at 150 °C		[14.5 Psi(G) at 302 °F]	
M.D.M.T.	: 0 °C at -1.0/10.0 Bar(G)		[32 °F at -14.5/145.04 Psi(G)]	
FILTER VOLUME	: 775 Ltr		[204.73 Gal]	
CORR. ALLOW.	: 0 mm		[0 In]	
INSULATION SURFACE	: – m^2		[– ft^2]	
WEIGHT FULL (WATER)	: 1425 Kg		[3141.59 lb]	
EMPTY	: 328 Kg (VESSEL)		[723.16 lb]	
	: 56 Kg (COVER)		[123.46 lb]	
	: 266 Kg (CANDLES)		[586.43 lb]	
	SA240 304	ACC.	: ASME	
RADIOGRAPHY	: NONE	WELD EFF.	: 0.85	
MEDIUM	: BLEACHED TALLOW/VEGETABLE OIL			
HEAT TREATMENT	: NONE			
MISALIGNMENTS	: AS PER UW 33			
OUT OF ROUNDNESS	: MAX. AS PER UG 80			
PWHT	: N/A			
LETHAL SERVICE	: NO			

WIND
BASIC WIND SPEED
SOURCE : ASCE7-16, LATEST EDITION (WIND HAZARD MAPS)
BASIC WIND SPEED : 162.5 kph [101 mph]
EXPOSURE FACTOR : C
IMPORTANCE FACTOR : 1

SEISMIC CONDITIONS
SEISMEC ZONE FACTOR
SOURCE : ASCE 7-16
SEISMIC DESIGN CATEGORY : D
SEISMIC SITE CLASS : D
IMPORTANCE FACTOR : 1.25
SPECTRAL RESPONSE ACCELERATION AT SHORT PERIOD, Sds : 1.077 g
SPECTRAL RESPONSE ACCELERATION ONE SECOND PERIOD, Sd1 : 0.664 g

SOIL PROFILE
SEISMIC DESIGN CATEGORY : D
SEISMIC SITE CLASS : D

SEISMIC IMPORTANCE FACTOR I : 1.25
SEISMIC IMPORTANCE FACTOR Ip : 1.25

SURFACE TREATMENT :
S.S. PARTS TO BE PICKLED & PASSIVATED

FILTER CANDLE DATA:

FILTER AREA	: 19 m^2 [204.51 ft^2]	MAX. CAKE THICKNESS: 4	mm [0.16	In]
NBR. FILTER CANDLES	: 55	CANDLE PITCH : 85	mm [3.35	In]
LENGTH CANDLES	: 1500 mm [59.06 In]	MAT. FILTER CANDLES : AISI 316L (1.4404)		
MAT. SLEEVES	: PE-021	WEIGHT FILTER ELEM. : 266	Kg [586.43	lb]
DIAMETER SLEEVES	: 70 mm [2.76 In]			

ALLOWABLE NOZZLE LOADS						
NOZZLE	F_x	F_y	F_z	M_x	M_y	M_z
N1	5.62 kN [1263.43 LBf]			2.59 kNm [1910.29 LBf-ft]		
N2	5.62 kN [1263.43 LBf]			2.59 kNm [1910.29 LBf-ft]		
N3	3.76 kN [845.28 LBf]			1.15 kNm [848.2 LBf-ft]		
N4	0.94 kN [211.32 LBf]			0.07 kNm [51.63 LBf-ft]		

LIST OF MATERIAL (LOM)	
PLATE	SA240 304
PIPE	SA312 TP304
NOZZLE FLANGE	SA182 F304

★ STANDARD START-UP AND COMMISSIONING PARTS

	11	4	STUD BOLT, c/w 2x HEAVY NUTS	SA193 B8	5/8"-11 UNC x 90L	–
★	10	2	PLUG 1" NPT	S.S.	3000#	–
★	9	1	MOUNTING PLIER 220mm	OETIKER	1098 L	–
★	8	110	CLAMP 071.0-706R	1.4301	–	–
★	7	55	FILTER SLEEVE PE-021/70 LG.=1590	POLYESTER	–	–
★	6	2	O-RING 70°Sh #724.0 x 7.0	VITON	–	–
	5	1	GASKET 2" 105x60x2t (P.GAUGE)	VITON	ASME B16.21-150#	–
	4	1	MEMBR.MANOMETER -1+10 ASME 2"	S.S.	-14.5 ~ 145 Psi	–
	3	1	COLLECTOR PLATE 711/55	S.S.	14240-RPW-K	–
	2	55	CANDLE 1500/70/1"	S.S.	TC00273	–
	1	1	TANK RP(W) 711/1500 Ref. LOM		14240-RPW-B	–
PART NO.	QTY.	DESCRIPTION	MATERIAL	REMARKS	WEIGHT(KG)	

APPROVAL STAMP:

THIS DOCUMENT AND ITS CONTENT IS THE PROPERTY OF PMI-TECHNOLOGY SDN BHD AND MAY NOT BE COPIED OR OTHERWISE DISCLOSED TO ANY THIRD PARTY WITHOUT OUR WRITTEN CONSENT. IT MUST BE RETURNED UPON REQUEST. CONTRAVENTIONS WILL BE PROSECUTED.

	DRAWN BY	CHECKED BY	APPROVED BY
NAME	ADY	JASON	JASON
DATE	05/05/2021	05/05/2021	05/05/2021

SIZE A1 | SCALE: 1:1

TITLE/DESCRIPTION: BACK PULSE FILTER
SUBJECT: REVERSE PULSE TYPE RP(W) FILTER (POLISH) 711/1500

W/O NO.: 14240
O/C NO.: 2021/123
PROJECT NAME: DESMET (WORPAR)

PMI-TECHNOLOGY SDN. BHD. (568082-K)

DRAWING NO.: 14240-RPW-A REV. 8

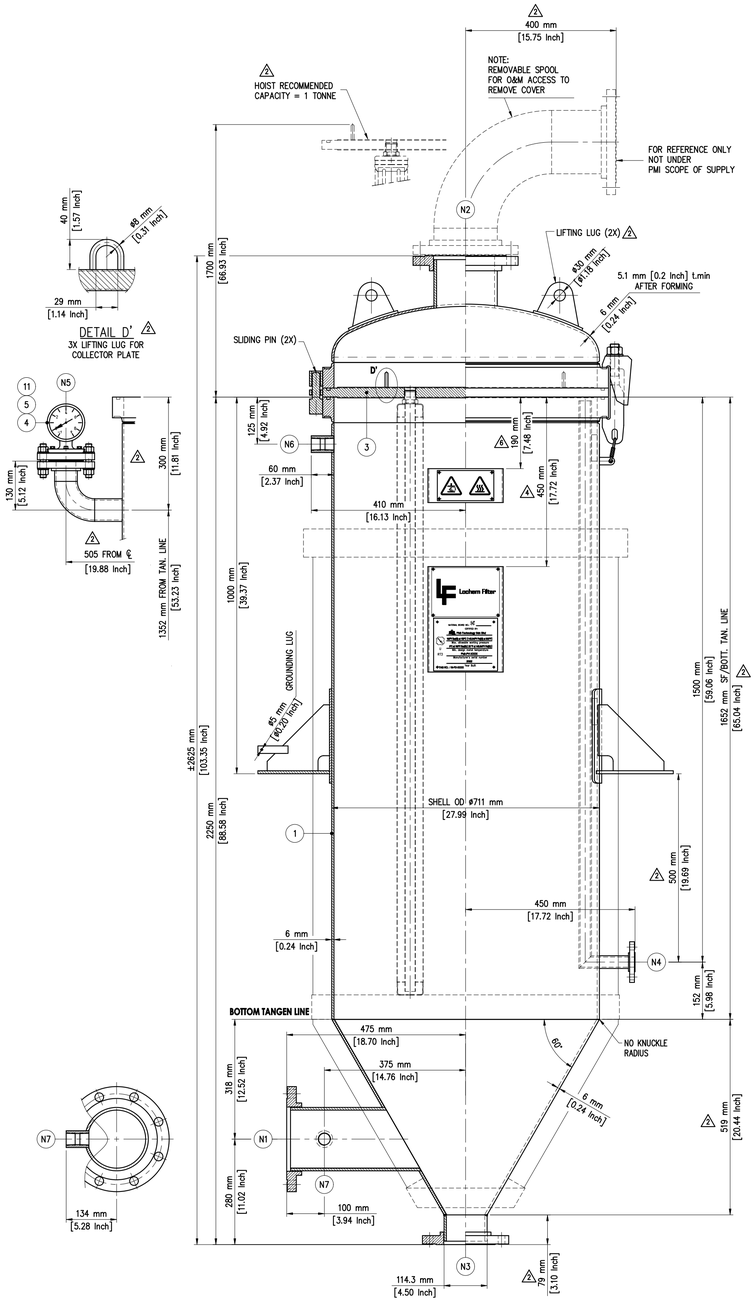

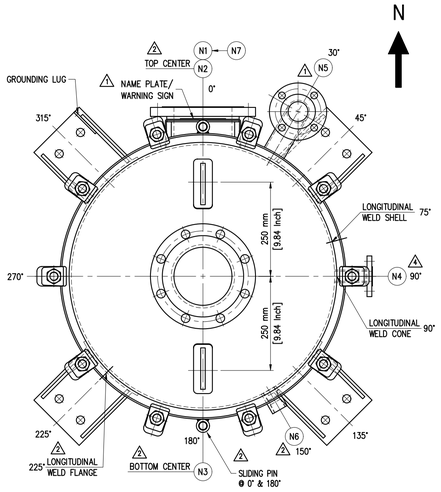

NOZZLE ORIENTATION

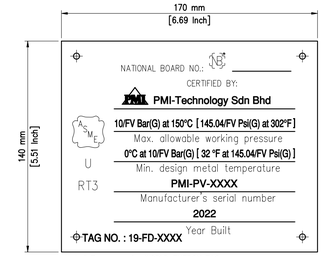

Note# Tag no. refer WORLD ENERGY TAG.

NAME PLATE DETAIL

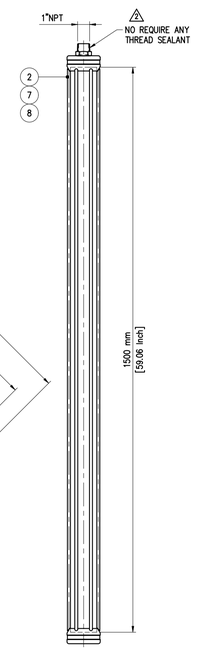

CANDLES

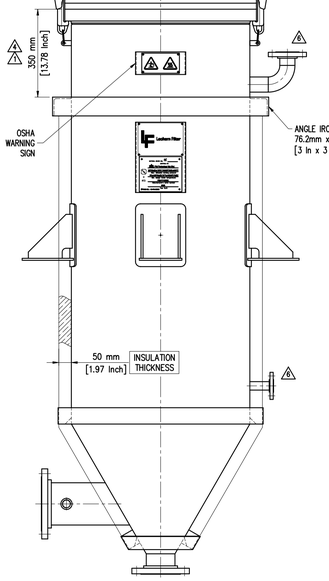

INSULATION RINGS

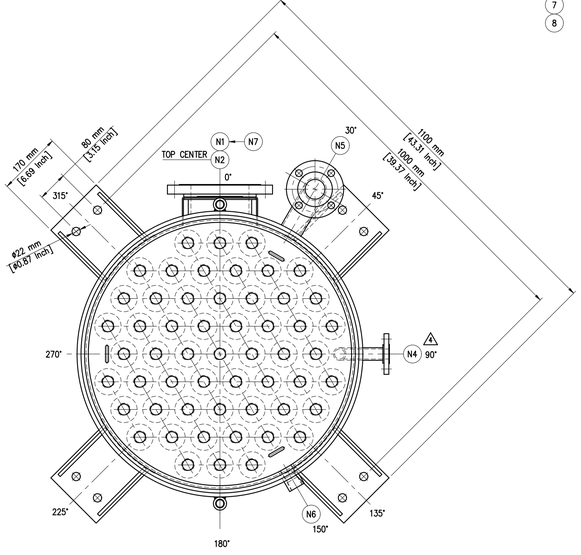

TOP VIEW WITHOUT COVER

PROJECT - WORPAR
ITEM NBR - 616B1.1-616B1.2-616B2.1-616B2.2
TYPE - ASSY
eB NBR - 100187519.008
DATE - 14.03.2022

REV.	DATE	DESCRIPTION	DRAWN BY	CHECKED BY	APPROVED BY
8	08/03/22	CORRECTION UNIT	ADY	JASON-08/03/22	JASON-08/03/22
7	21/02/22	ADD NOZZLE LOAD FOR N3	ADY	JASON-21/02/22	JASON-21/02/22
6	17/01/22	REVISE AS SHOWN	ADY	JASON-17/01/22	JASON-17/01/22
5	07/12/21	REVISE AS SHOWN	ADY	JASON-07/12/21	JASON-07/12/21
4	14/09/21	REVISE AS SHOWN	ADY	JASON-14/09/21	JASON-14/09/21
3	25/08/21	ADD NOZZLE LOAD TABLE	ADY	JASON-25/08/21	JASON-25/08/21
2	01/07/21	REVISE AS SHOWN	ADY	JASON-01/07/21	JASON-01/07/21
1	31/05/21	REVISE AS SHOWN	ADY	JASON-01/06/21	JASON-01/06/21

PROJECT NAME: WORPAR

DESMET TAG.	WORLD ENERGY TAG.
616B1.1	19-FD-767A
616B1.2	19-FD-867A
616B2.1	19-FD-767B
616B2.2	19-FD-867B