1 WPS NO.____N/A
ROOT ____N/A
FILLER ____N/A
CAP ____N/A

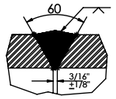

LONG SEAM

2 WPS NO.____BE-16 REV 01
BE-17 REV 01
ROOT ____ER70S-6
FILLER ____E71T-12MJ-H8
CAP ____E71T-12MJ-H8

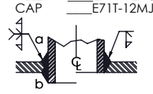

NOZZLE WELD DETAIL

3 WPS NO.____BE-16 REV 01
BE-17 REV 01
ROOT ____ER70S-6
FILLER ____E71T-12MJ-H8
CAP ____E71T-12MJ-H8

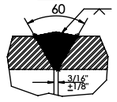

PIPE TO FLANGE WELD DETAIL

4 WPS NO.____BE-16 REV 01
ROOT ____ER70S-6
FILLER ____ER70S-6
CAP ____ EM14-K

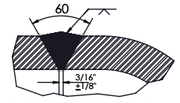

HEAD TO SHELL WELD DETAIL

5 WPS NO.____BE-16 REV 01
BE-17 REV 01
ROOT ____ER70S-6
FILLER ____E71T-12MJ-H8
CAP ____E71T-12MJ-H8

COUPLING WELD DETAIL

6 WPS NO.____BE-16 REV 01
BE-17 REV 01
ROOT ____ER70S-6
FILLER ____E71T-12MJ-H8
CAP ____E71T-12MJ-H8

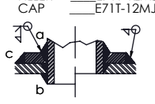

REPAD WELD DETAIL

PALL FILTER HOUSING

PART NO. VV042HP65S4A/ VV007HP65S4A
SERIAL NO. 100791/ 100792
DESIGN PRESS. 270 PSIG; TEMP. 300°F
RATED ____ MANUFACTURER BAGWELL
CAPACITY ____ YEAR BUILT ____
SIZE 24" OD X 7'-6" S/S
CRTG PART NO. HFU660UY045J / HFU660UY100J
FOR MAXIMUM ALLOWABLE DIFFERENTIAL PRESSURE SEE PRODUCT LITERATURE
WARNING DO NOT INSTALL OR SERVICE THIS EQUIPMENT WITHOUT READING THE INSTRUCTION SHEET
PALL TRINITY MICRO CORTLAND, NY 13045
PO NO. ____

	NAT'L BD: XX-XXX			
U	CERTIFIED BY Bagwell Energy Services	10404 Twin Port Rd. Delcambre, LA 70528 Phone: (337) 837-2244		
	MAWP 320 PSIG	AT	300°F	
HT	MDMT 32°F	AT	320 PSIG	
RT-2	OD: 24"	S/S: 7'-6"	CA: 0.125"	
	S/N: 21-446401-02 / 21-446401-03	YR: BLT. 2023		
SHELL MAT'L SA-106 Gr. B	SHELL THK. 0.5"	HEAD MAT'L SA-516-70N	HEAD THK. 0.5"	
TAG NO: 18-FD-260 & 18-FD-26	SEE PROD. LIT. FOR MAWP EXT.			
EMPTY WEIGHT: 2,400 LB	EMPTY WEIGHT: 3,600 LB			
MAEP: 67.18 PSIG	AT	300°F		

MATERIAL SPECIFICATIONS

SHELL #1: 0.5" THK; MAT'L: SA-106 Gr. B	SHELL #2: -
SHELL #3: -	SHELL #4: -
HEAD #1: 0.375" THK; 0.3188" MIN THK; MAT'L: SA-516-70N; TYPE: 2:1 ELLIPTICAL HEAD	
HEAD #2: 24" Quick Opening Closure, Nevis Pipeline Products Series AD Swing Bolt	
ANCHOR BOLT: F1554 GR. 36 **(BY OTHERS)**	
INTERNALS: SA-316L	

FLANGE MAT'L:	SA-105N	STUD BOLT MAT'L:	SA-193-B7M	FLUOROCARBON BOLTS:	
PIPE NOZZLE MAT'L:	SA-106 Gr. B	NUT MAT'L:	SA-194-2HM	O YES X NO	
WELD FITTING MAT'L:	SA-234 WPB	MACH. BOLT MAT'L:	SA-307 Gr. B	MACH BOLTS & NUTS STAINLESS:	
CPLG MAT'L:	SA-105N	MACH. NUT MAT'L:	SA-563 Hvy. Hex	X YES O NO	

DESIGN SPECIFICATIONS

DESIGN PRESSURE: 270 PSIG/FV @ 300°F	**MDMT:** 32°F
FINAL HYDROSTATIC TEST PRESSURE: 416 PSIG	MAWP: 320 PSIG
FINAL HYDROSTATIC TEST PRESSURE BASED ON: 1.3 TIMES MAWP	
POST WELD HEAT TREAT: YES; TIME: 1 Hrs. 0 Min. @ 1175°F ± 25°F	
CORROSION ALLOWANCE: 0.125"	

	RT1	RT2 X	RT3	RT4	NONE
LONG SEAM HEMI HD-SHELL:	FULL LTH.	N/A SMLS	SPOT		
HEAD TO SEAM:	FULL LTH.	SPOT	SPOT		
INTERMEDIATE GIRTH:	FULL LTH.		SPOT		
NOZZLE > 10" OR > 1.125":	FULL		SPOT		
NOZZLE <=10" AND <= 1.25":	N/A		N/A		

JOINT EFFICIENCIES (%)

LONG SEAM:	100	85	70
SEAMLESS:	100	100	85
HEAD-SHELL (HEMI)	90/100	80/85	65/70

VESSEL TO BE CONSTRUCTED IN STRICT ACCORDANCE WITH 2019 EDITION OF ASME PRESSURE VESSEL CODE: SECTION VIII, DIVISION 1. THE LOADING REQUIREMENTS OF UG-22 HAVE BEEN CONSIDERED IN THE DESIGNING OF THIS PRESSURE VESSEL.

1.) ALL NOZZLES IN SHELL(S): FULL PENETRATION ATTACHMENT WELDS

2.) WELDING PROCEDURES: ASME VIII APPROVED

3.) CIRCUMFERENTIAL JOINTS HAVE BACKUP STRIPS: O YES X NO

4.) NO CHILL RINGS TO BE USED IN NOZZLES

5.) ALL FLANGES TO HAVE BOLT HOLES STRADDLING TRUE CENTERLINES

6.) REINFORCEMENT MATERIAL SHALL BE THE MATERIAL SPECIFIED

7.) ALL THREADED OPENINGS SHALL BE PLUGGED WITH LONG SHANK HEX PIPE PLUGS. PLUG MATERIAL SHALL BE EQUIVALENT TO THE MATERIAL BEING PLUGGED.

8.) ALL EXTERNAL REINFORCING PADS TO HAVE 1/4" NPT TAPPED HOLE

9.) MATERIAL OF ALL THICKNESS FOR PARTS NOT SUBJECT TO STRESS DUE TO PRESSURE SHALL COMPLY WITH UG-4(b)

10.) ALL ATTACHMENT WELDS SHALL BE DRY MT EXAMINED AFTER GRINDING

11.) WEIGHT EMPTY: 2,400 LBS
WEIGHT FULL: 3,600 LBS
HYDROSTATIC TEST WEIGHT: 3,600 LBS

PAINT NOTES:
COLOR CODE: RAL 7035
COATING SYSTEM: 2
SURFACE PREP: SSPC-SP10
PRIME COAT: CARBOZINC 11: 2.5-4 MILS DFT
INTERMEDIATE: THERMALINE 4900: 1.5-2 MILS DFT
TOP COAT: THERMALINE 4900: 1.5-2 MILS

HFU660UY045J / HFU660UY100J

NOTE: REFERENCE DWG # PES-21-DF-2761-032 FOR INTERNAL FILTER DETAILS
18-FD-260 Filter Element Part #: HFU660UY045J
18-FD-261 Filter Element Part #: HFU660UY100J

WIND
CODE: ASCE 7-16
SPEED: 101 MPH
RISK CATEGORY: III

SEISMIC
CODE: ASCE 7-16
SITE CLASS: D
RESPONSE MOD,: R = 3
IMPORTANCE FACTOR: 1.25
Ss: 1.616
S1: 0.579

ANCHOR BOLT MOC: MOC-F1554 GR 36 (BY OTHERS)

DESIGN SPECIFICATIONS (CONTINUED)
INSULATION THICKNESS: 3"
INSULATION TYPE: PP (BY OTHERS)
PROCESSING FLUID:
AMINE: SG = 1.02
ALLOWABLE PRESSURE DROP:
CLEAN: 5.0 PSI
DIRTY: 15 PSI
WEIGHTS:
FABRICATED: 2,400 LBS
EMPTY: 2,400 LBS
OPERATING: 3,600 LBS
SITE HYDROTEST: 3,600 LBS
SHIPPING ERECTION: 2,400 LBS
OPERATING PRESSURE (18-FD-260): 187 PSIG
OPERATING PRESSURE (18-FD-261): 177 PSIG
OPERATING TEMPERATURE: 137°F

Nozzle Schedule

MARK	QTY.	SERVICE	SIZE AND RATING	NOZZLE BORE	WELD DETAIL	OUTSIDE PROJECTION FACE TO SHELL	MINIMUM INSIDE PROJECTION	FILLET WELD SIZE: a (OUTSIDE)	FILLET WELD SIZE: b (INSIDE)	FILLET WELD SIZE: c (REPAD)	REMARKS
N1	1	Inlet	6" 300# RF LWN	LWN	2	11.00"	Flush	0.375"	-	-	
N2	1	Outlet	6" 300# RF LWN	LWN	2	11.00"	-	0.375"	-	-	
N3	1	Vent	2" 300# RF LWN	LWN	2	11.00"	Flush	0.375"	-	-	
N4	1	Drain	2" 300# RF WN	Sch. 160	2	See DWG.	Flush	0.375"	-	-	
N5	1	Purge	2" 300# RF LWN	LWN	2	11.00"	-	0.375"	-	-	
SO1	1	Drain Opening	8" Sch. 40	Sch. 40	2	2.00"	1.00"	0.25"	-	-	
SO2	1	Vent	2" Sch. 40	Sch. 40	2	2.00"	1.00"	0.25"	-	-	
SO3	1	Vent	2" Sch. 40	Sch. 40	2	2.00"	1.00"	0.25"	-	-	

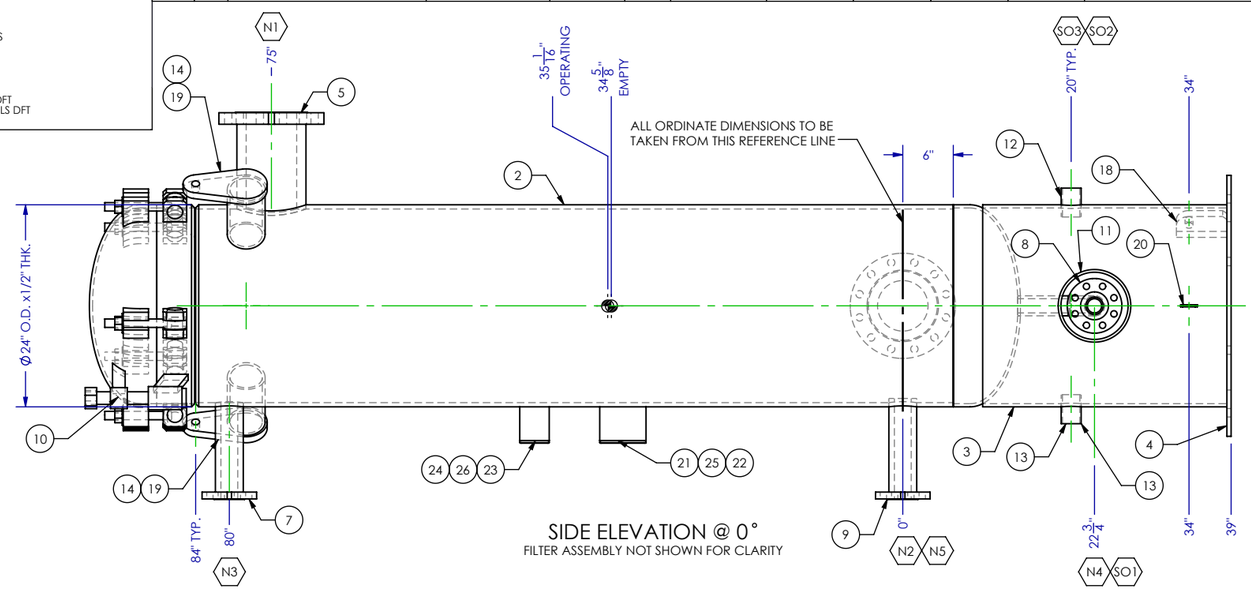

SIDE ELEVATION @ 0°
FILTER ASSEMBLY NOT SHOWN FOR CLARITY

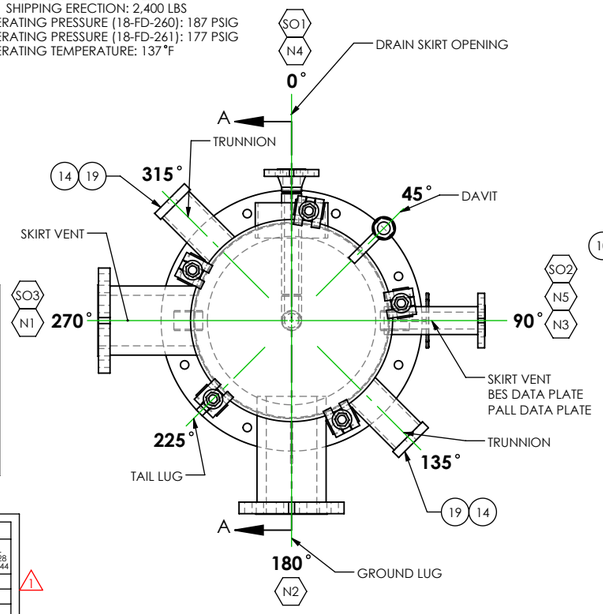

TOP VIEW (18-FD-261)
FILTER ASSEMBLY NOT SHOWN FOR CLARITY
NOTE: SEE LAST PAGE THIS DRAWING FOR PLAN VIEW OF VESSEL TAG 18-FD-260.

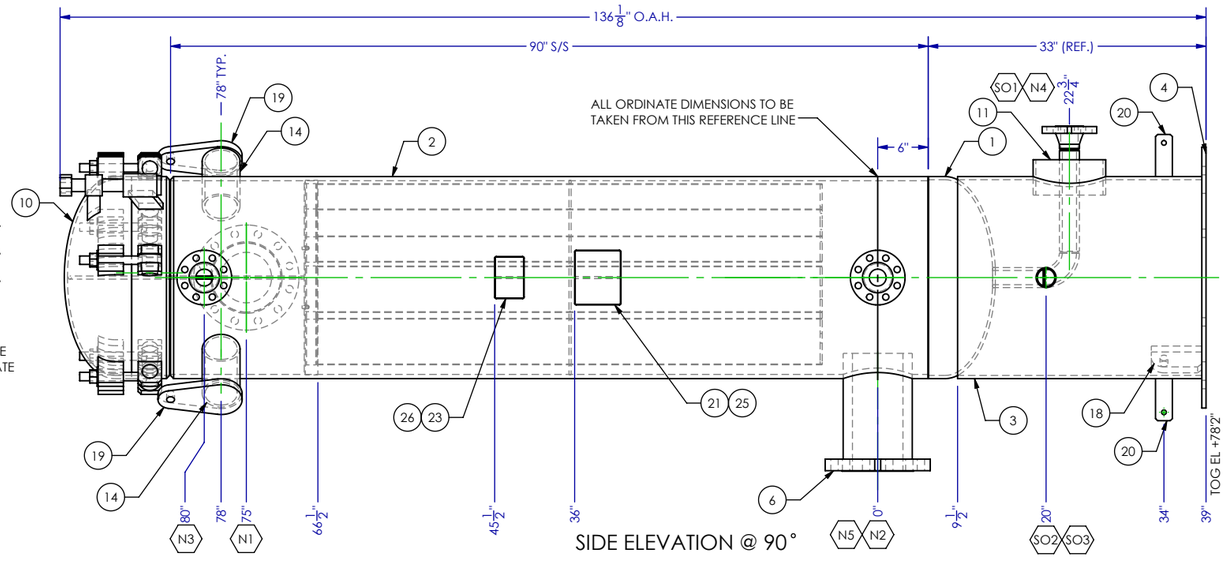

SIDE ELEVATION @ 90°

AMINE SERVICE AND WET H2S SERVICE

DISCLAIMER:
THIS DRAWING IS AN INSTRUMENT OF SERVICE AND SHALL REMAIN THE PROPERTY OF PES. THIS DRAWING SHALL NOT BE REPRODUCED, PUBLISHED, OR USED IN ANY OTHER MANNER WITHOUT THE EXPRESSED WRITTEN PERMISSION OF PES.

GENERAL NOTES:

1. ALL WELDING SHALL BE IN ACCORDANCE WITH AWS D1.1 AND ASME VIII, DIV. 1.
2. ALL WELDS SHALL BE NDE TESTED IN ACCORDANCE WITH ASME VIII, DIV. 1.
3. ALL WELDS SHALL BE FULL PENETRATION WELDS UNLESS NOTED OTHERWISE.
4. ALL LIFT LUG HOLES SHALL BE DRILLED OR REAMED. FLAME CUTTING IS PROHIBITED.
5. ALL "-" TICK MARKS INDICATE NO INSIDE PROJECTION REQUIRED, BUT NOZZLES NOT REQUIRED TO BE CUT FLUSH.
6. NAMEPLATE TO BE STAINLESS STEEL.
7. ALL "REF." DIMENSIONS ARE FOR REFERENCE ONLY AND SHOULD NOT BE USED AS FINAL FIT-UP DIMENSIONS.
8. ALL INTERNAL ATTACHMENTS SHALL WELDED IN ACCORDANCE WITH WPS BE-20 REV 0.
9. ANCHOR BOLT MATERIAL HAS BEEN SPECIFIED BY END USER IN ASME CODE CALCULATIONS. ANCHOR BOLT & FOUNDATION DESIGN NOT PROVIDED IN PES' OR BES' SCOPE OF SUPPLY.
10. ALL PARTS WELDED TO THE SHELL, SHALL BE MADE OF THE SAME MATERIAL AS THE SHELL.
11. ALL MATERIALS FURNISHED SHALL BE IN COMPLIANCE WITH PROJECT SPEC SPEC-ENGMQ042, "MATERIAL CERTIFICATION AND RETESTING REQUIREMENTS."
12. ALL TEMPORARY ATTACHMENTS SHALL BE REMOVED BEFORE HYDROTEST.
13. REPAD ATTACHMENT WELDS AND ACCESSIBLE SURFACES OF INSIDE NOZZLE TO VESSEL WALL WELDS SHALL BE TESTED FOR THE ABSENCE OF LEAKS WITH A GAUGE PRESSURE OF 15 PSIG (100 KPA) DRY AIR OR NITROGEN AND BUBBLE FORMING SOLUTION.
14. TOLERANCES SHALL BE IN ACCORDANCE WITH ASME SEC VIII DIV.1 AND AS PER FIG.2 OF SPECIFICATION A8KM-PP-000-50801-A.
15. ALL WELDS ATTACHING THE LIFTING LUG AND TAILING LUG TO THE EQUIPMENT SHALL BE MT OR PT EXAMINED.

REVISIONS			
REV.	BY	DESCRIPTION	DATE
0	SF	ISSUE FOR CONSTRUCTION	6/20/2023
1	SF	ISSUE FOR CONSTRUCTION	2/5/2024

PALL Corporation
PALL.com

PRACTICAL ENGINEERING SOLUTIONS LLC
P.O. BOX 51564
LAFAYETTE, LA 70505
PHONE: (337) 408-3242
EMAIL: info@eng-pes.com
www.eng-pes.com

DRAWING DESCRIPTION:
24" O.D. x 7'-6" S/S
270 PSIG/FV @ 300°F
18-FD-260 / 261
Lean Amine Filter

CLIENT DRAWING #:
EN207121-PALLCO-9V3-00022

PES DRAWING #:
PES-21-DF-2761-002

DRAWN BY:	APPROVED BY:	DATE:
SL	TC	6/20/2023
SCALE:	SHEET:	REV:
N/A	1 OF 4	1

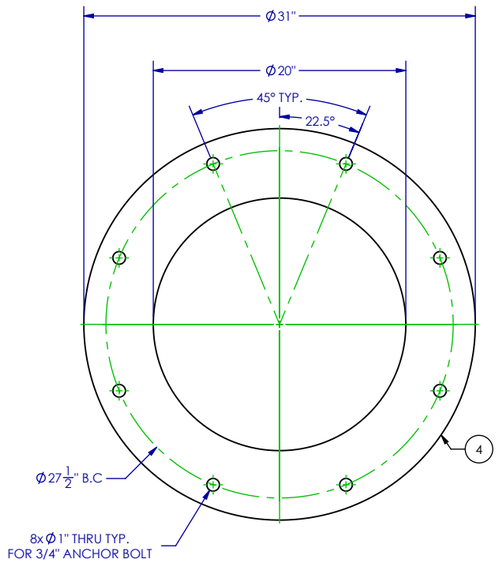

SKIRT BASE DETAIL

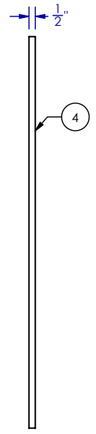

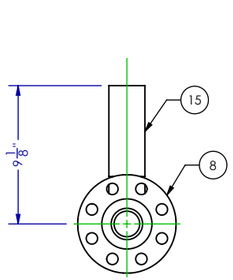

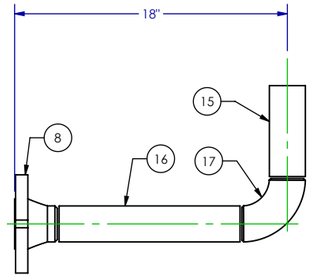

NOZZLE N4 DRAIN ASSEMBLY

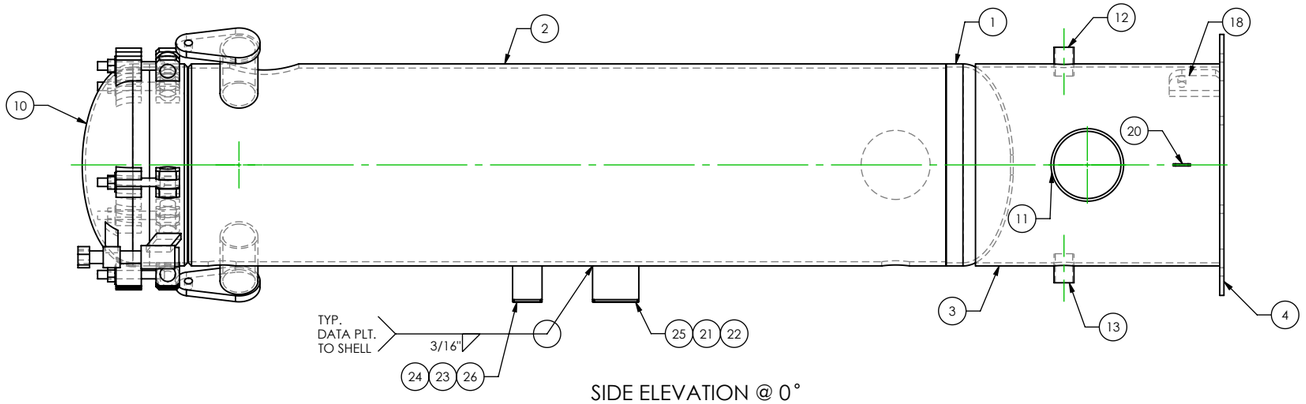

SIDE ELEVATION @ 0°
EXTERNAL ATTACHMENT WELD DETAILS

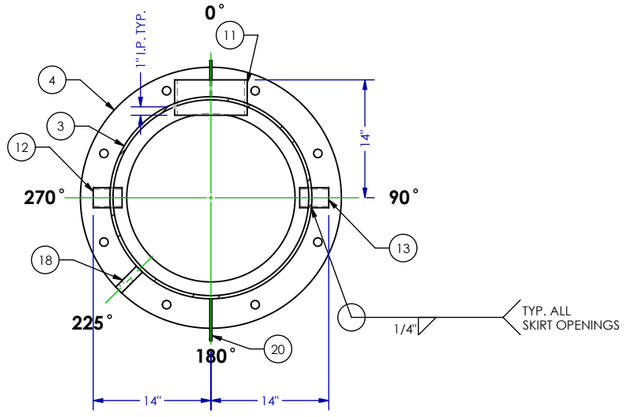

SECTION B-B
SKIRT OPENING DETAILS

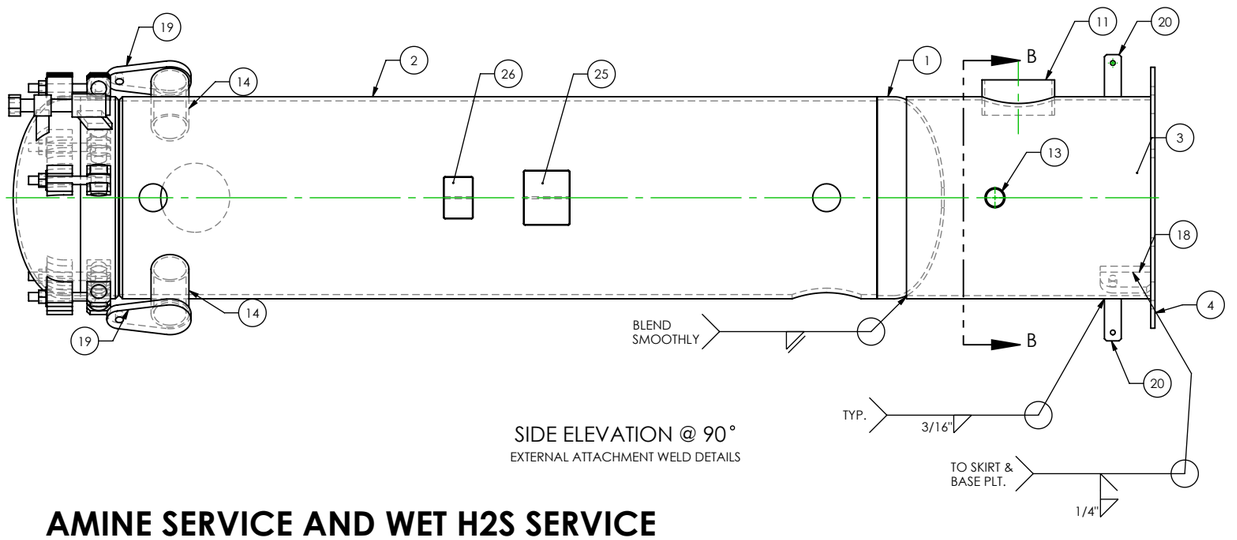

SIDE ELEVATION @ 90°
EXTERNAL ATTACHMENT WELD DETAILS

AMINE SERVICE AND WET H2S SERVICE

DISCLAIMER:
THIS DRAWING IS AN INSTRUMENT OF SERVICE AND SHALL REMAIN THE PROPERTY OF PES. THIS DRAWING SHALL NOT BE REPRODUCED, PUBLISHED, OR USED IN ANY OTHER MANNER WITHOUT THE EXPRESSED WRITTEN PERMISSION OF PES.

GENERAL NOTES:

1. ALL WELDING SHALL BE IN ACCORDANCE WITH AWS D1.1 AND ASME VIII, DIV. 1.
2. ALL WELDS SHALL BE NDE TESTED IN ACCORDANCE WITH ASME VIII, DIV. 1.
3. ALL WELDS SHALL BE FULL PENETRATION WELDS UNLESS NOTED OTHERWISE.
4. ALL LIFT LUG HOLES SHALL BE DRILLED OR REAMED. FLAME CUTTING IS PROHIBITED.
5. ALL "-" TICK MARKS INDICATE NO INSIDE PROJECTION REQUIRED, BUT NOZZLES NOT REQUIRED TO BE CUT FLUSH.
6. NAMEPLATE TO BE STAINLESS STEEL.
7. ALL "REF." DIMENSIONS ARE FOR REFERENCE ONLY AND SHOULD NOT BE USED AS FINAL FIT-UP DIMENSIONS.
8. ALL INTERNAL ATTACHMENTS SHALL WELDED IN ACCORDANCE WITH WPS BE-20 REV 0.
9. ANCHOR BOLT MATERIAL HAS BEEN SPECIFIED BY END USER IN ASME CODE CALCULATIONS. ANCHOR BOLT & FOUNDATION DESIGN NOT PROVIDED IN PES' OR BES' SCOPE OF SUPPLY.
10. ALL PARTS WELDED TO THE SHELL, SHALL BE MADE OF THE SAME MATERIAL AS THE SHELL.
11. ALL MATERIALS FURNISHED SHALL BE IN COMPLIANCE WITH PROJECT SPEC SPEC-ENGMQ042, "MATERIAL CERTIFICATION AND RETESTING REQUIREMENTS."
12. ALL TEMPORARY ATTACHMENTS SHALL BE REMOVED BEFORE HYDROTEST.
13. REPAD ATTACHMENT WELDS AND ACCESSIBLE SURFACES OF INSIDE NOZZLE TO VESSEL WALL WELDS SHALL BE TESTED FOR THE ABSENCE OF LEAKS WITH A GAUGE PRESSURE OF 15 PSIG (100 KPA) DRY AIR OR NITROGEN AND BUBBLE FORMING SOLUTION.
14. TOLERANCES SHALL BE IN ACCORDANCE WITH ASME SEC VIII DIV.1 AND AS PER FIG.2 OF SPECIFICATION A8KM-PP-000-50801-A.
15. ALL WELDS ATTACHING THE LIFTING LUG AND TAILING LUG TO THE EQUIPMENT SHALL BE MT OR PT EXAMINED.

REVISIONS

REV.	BY	DESCRIPTION	DATE
0	SF	ISSUE FOR CONSTRUCTION	6/20/2023
1	SF	ISSUE FOR CONSTRUCTION	2/5/2024

PALL Corporation
PALL.com

PRACTICAL ENGINEERING SOLUTIONS LLC
P.O. BOX 51564
LAFAYETTE, LA 70505
PHONE: (337) 408-3242
EMAIL: info@eng-pes.com
www.eng-pes.com

DRAWING DESCRIPTION:
24" O.D. x 7'-6" S/S
270 PSIG/FV @ 300°F
18-FD-260 / 261
Lean Amine Filter

CLIENT DRAWING #:
EN207121-PALLCO-9V3-00022

PES DRAWING #:
PES-21-DF-2761-002

DRAWN BY:	APPROVED BY:	DATE:
SL	TC	6/20/2023
SCALE:	SHEET:	REV:
N/A	2 OF 4	1

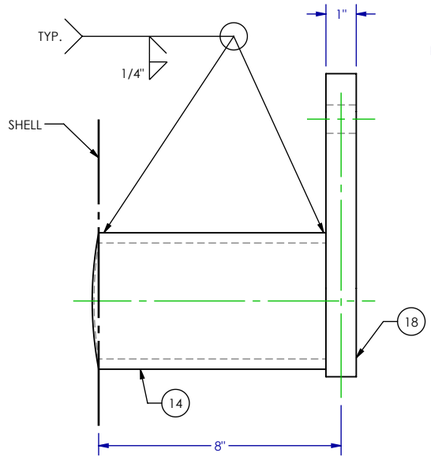

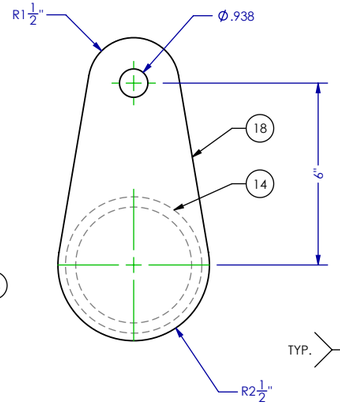

TRUNION LUG DETAIL
2 REQ'D LOCATE @ 0° AND 180°

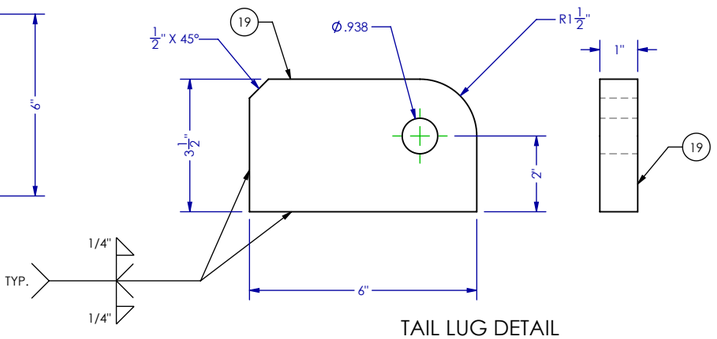

TAIL LUG DETAIL

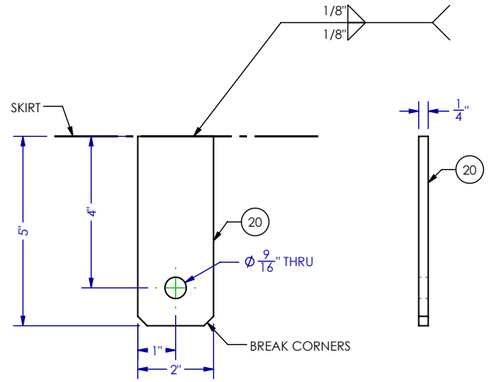

GROUNDING LUG DETAIL
(2 REQUIRED)

BES NAMEPLATE ASSEMBLY
TOP VIEW

BES NAMEPLATE MOUNT

PALL NAMEPLATE ASSEMBLY
TOP VIEW

PALL NAMEPLATE MOUNT

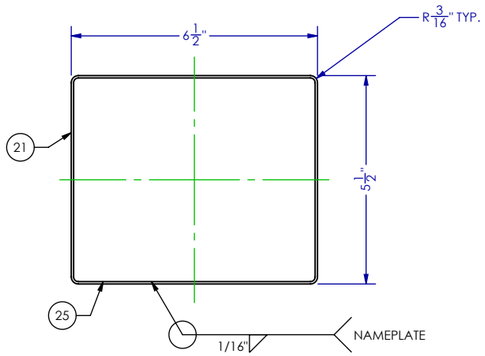

BES NAMEPLATE ASSEMBLY
FRONT VIEW

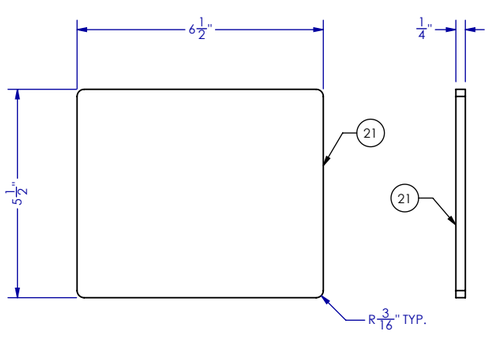

BES NAMEPLATE BRACKET

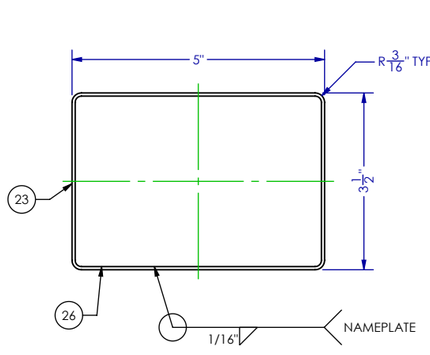

PALL NAMEPLATE ASSEMBLY
FRONT VIEW

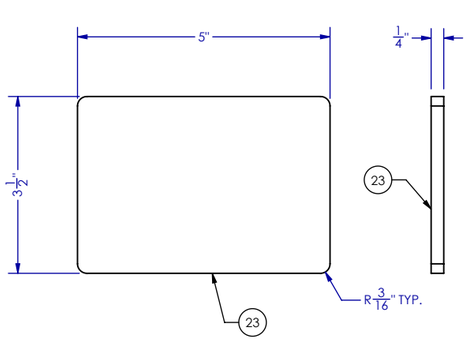

PALL NAMEPLATE BRACKET

AMINE SERVICE AND WET H2S SERVICE

DISCLAIMER:
THIS DRAWING IS AN INSTRUMENT OF SERVICE AND SHALL REMAIN THE PROPERTY OF PES. THIS DRAWING SHALL NOT BE REPRODUCED, PUBLISHED, OR USED IN ANY OTHER MANNER WITHOUT THE EXPRESSED WRITTEN PERMISSION OF PES.

GENERAL NOTES:

1. ALL WELDING SHALL BE IN ACCORDANCE WITH AWS D1.1 AND ASME VIII, DIV. 1.
2. ALL WELDS SHALL BE NDE TESTED IN ACCORDANCE WITH ASME VIII, DIV. 1.
3. ALL WELDS SHALL BE FULL PENETRATION WELDS UNLESS NOTED OTHERWISE.
4. ALL LIFT LUG HOLES SHALL BE DRILLED OR REAMED. FLAME CUTTING IS PROHIBITED.
5. ALL "-" TICK MARKS INDICATE NO INSIDE PROJECTION REQUIRED, BUT NOZZLES NOT REQUIRED TO BE CUT FLUSH.
6. NAMEPLATE TO BE STAINLESS STEEL.
7. ALL "REF." DIMENSIONS ARE FOR REFERENCE ONLY AND SHOULD NOT BE USED AS FINAL FIT-UP DIMENSIONS.
8. ALL INTERNAL ATTACHMENTS SHALL WELDED IN ACCORDANCE WITH WPS BE-20 REV 0.
9. ANCHOR BOLT MATERIAL HAS BEEN SPECIFIED BY END USER IN ASME CODE CALCULATIONS. ANCHOR BOLT & FOUNDATION DESIGN NOT PROVIDED IN PES' OR BES' SCOPE OF SUPPLY.
10. ALL PARTS WELDED TO THE SHELL, SHALL BE MADE OF THE SAME MATERIAL AS THE SHELL.
11. ALL MATERIALS FURNISHED SHALL BE IN COMPLIANCE WITH PROJECT SPEC SPEC-ENGMQ042, "MATERIAL CERTIFICATION AND RETESTING REQUIREMENTS."
12. ALL TEMPORARY ATTACHMENTS SHALL BE REMOVED BEFORE HYDROTEST.
13. REPAD ATTACHMENT WELDS AND ACCESSIBLE SURFACES OF INSIDE NOZZLE TO VESSEL WALL WELDS SHALL BE TESTED FOR THE ABSENCE OF LEAKS WITH A GAUGE PRESSURE OF 15 PSIG (100 KPA) DRY AIR OR NITROGEN AND BUBBLE FORMING SOLUTION.
14. TOLERANCES SHALL BE IN ACCORDANCE WITH ASME SEC VIII DIV.1 AND AS PER FIG.2 OF SPECIFICATION A8KM-PP-000-50801-A.
15. ALL WELDS ATTACHING THE LIFTING LUG AND TAILING LUG TO THE EQUIPMENT SHALL BE MT OR PT EXAMINED.

REVISIONS

REV.	BY	DESCRIPTION	DATE
0	SF	ISSUE FOR CONSTRUCTION	6/20/2023
1	SF	ISSUE FOR CONSTRUCTION	2/5/2024

PALL Corporation
PALL.com

PRACTICAL ENGINEERING SOLUTIONS LLC
P.O. BOX 51564
LAFAYETTE, LA 70505
PHONE: (337) 408-3242
EMAIL: info@eng-pes.com
www.eng-pes.com

DRAWING DESCRIPTION:
24" O.D. x 7'-6" S/S
270 PSIG/FV @ 300°F
18-FD-260 / 261
LEAN AMINE FILTER

CLIENT DRAWING #:
EN207121-PALLCO-9V3-00022

PES DRAWING #:
PES-21-DF-2761-002

DRAWN BY:	APPROVED BY:	DATE:
SL	TC	6/20/2023

SCALE:	SHEET:	REV:
N/A	3 OF 4	1

BOM Table

ITEM NO.	DESCRIPTION	SHAPE	QTY.	MATERIAL
1	24" O.D. x 3/8" Thk. (0.3188 Min. Wall) 2:1 Elliptical Head w/ 2" S.F.	3/8" Plate	1	SA-516-70N
2	24" Sch XS. x 7'-6" Smls Pipe Shell #1	Pipe	1	SA-106 Gr. B
3	24" Sch. Std. x 29" Pipe Skirt	Pipe	1	SA-106 Gr. B
4	Skirt Base Plate	1/2" Plate	1	SA-516-70
5	6" 300# RF LWN x 13" Lg. (N1)	LWN	1	SA-105N
6	6" 300# RF LWN x 14" Lg. (N2)	LWN	1	SA-105N
7	2" 300# RF LWN x 11.5" Lg. (N3)	LWN	1	SA-105N
8	2" 300# RF WN Sch. 160 Bore (N4)	WN	1	SA-105N
9	2" 300# RF LWN x 12" Lg. (N5)	LWN	1	SA-105N
10	Nevis 24" AD Swing Bolt Quick opening Closure w/ Davit (MAWP 320 PSIG / FV)	Q-O-C	1	SA-516-70
11	8in Sch. 40 x 4 3/16" Lg. (SO1)	Pipe	1	SA-106 Gr. B
12	2in Sch. 40 x 2 7/8" Lg. (SO2)	Pipe	1	SA-106 Gr. B
13	2in Sch. 40 x 2 7/8" Lg. (SO3)	Pipe	1	SA-106 Gr. B
14	4in Sch. 80	Pipe	2	SA-106 Gr. B
15	2in Sch. 160	Pipe	1	SA-106 Gr. B
16	2in Sch. 160	Pipe	1	SA-106 Gr. B
17	Elbow, 90°, LR, 2" Sch. 160, Butt Weld	Elbow	1	SA-234 WPB
18	Tailing Lug	1" Plate	1	SA-516-70
19	Lift Lug	1" Plate	2	SA-516-70
20	Grounding Lug	1/4" Plate	2	SA-516-70
21	BES Name Plate Bracket	1/4" Plate	1	SA-516-70
22	BES Name Plate Mount	1/4" Plate	1	SA-516-70
23	Pall Name Plate Bracket	1/4" Plate	1	SA-516-70
24	Pall Name Plate Mount	1/4" Plate	1	SA-516-70
25	BES Data Plate	Mfg. Std.	1	SA-316-SS
26	Pall Data Plate	Mfg. Std.	1	SA-316-SS

Foundation Load Summary

	Wind			Seismic		
	Shear (lb)	Vertical Force (lb)	Moment (ft-lb)	Shear (lb)	Vertical Force (lb)	Moment (ft-lb)
Empty	328	2,176	1,930	881	2,646	6,905
Operating	328	3,670	1,930	1,486	4,462	11,197

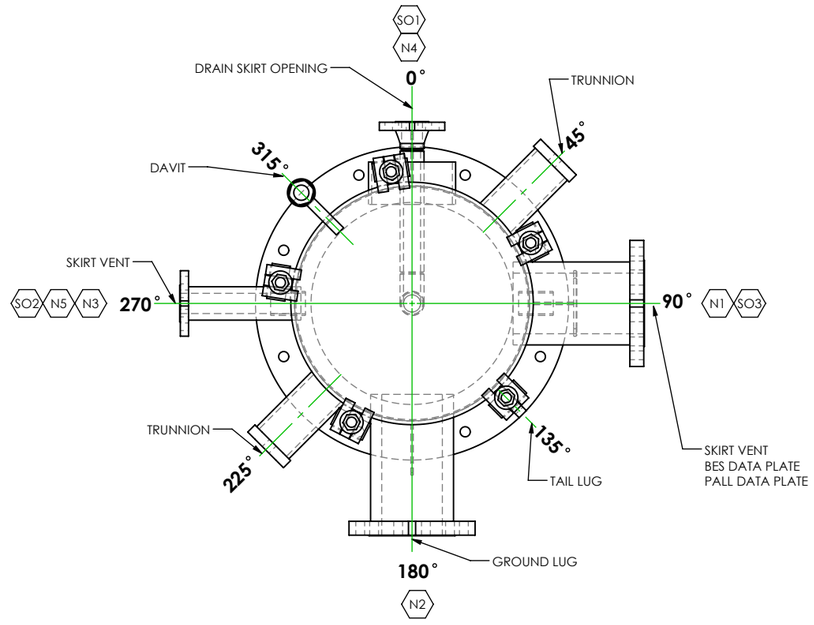

TOP VIEW (18-FD-260)
FILTER ASSEMBLY NOT SHOWN FOR CLARITY

Piping Nozzle Loads for Static Equipment (Ref. Table-5, A8KM-PP-000-50801-A)

	CLASS 300 FLANGE					
Nozzle Size	LBF			LBF-IN		
NPS	FR	FC	FL	MC	ML	MT
2 (Note 1)	441	329	441	1,764	2,268	2,604
3	940	710	940	5,520	7,200	8,400
4	1,300	940	1,300	9,960	13,200	14,400
6	1,900	1,400	1,900	22,800	28,800	33,600
8	2,500	1,900	2,500	39,600	51,600	60,000

NOZZLE LOAD NOTES:
1. NOZZLE LOADS FOR 2" NPS 300# CLASS FLANGES HAVE BEEN REDUCED BY 0.7 * TABLE-5, A8KM-PP-000-50801A AS PER CUSTOMER'S REQUEST.

DISCLAIMER:
THIS DRAWING IS AN INSTRUMENT OF SERVICE AND SHALL REMAIN THE PROPERTY OF PES. THIS DRAWING SHALL NOT BE REPRODUCED, PUBLISHED, OR USED IN ANY OTHER MANNER WITHOUT THE EXPRESSED WRITTEN PERMISSION OF PES.

GENERAL NOTES:

1. ALL WELDING SHALL BE IN ACCORDANCE WITH AWS D1.1 AND ASME VIII, DIV. 1.
2. ALL WELDS SHALL BE NDE TESTED IN ACCORDANCE WITH ASME VIII, DIV. 1.
3. ALL WELDS SHALL BE FULL PENETRATION WELDS UNLESS NOTED OTHERWISE.
4. ALL LIFT LUG HOLES SHALL BE DRILLED OR REAMED. FLAME CUTTING IS PROHIBITED.
5. ALL "-" TICK MARKS INDICATE NO INSIDE PROJECTION REQUIRED, BUT NOZZLES NOT REQUIRED TO BE CUT FLUSH.
6. NAMEPLATE TO BE STAINLESS STEEL.
7. ALL "REF." DIMENSIONS ARE FOR REFERENCE ONLY AND SHOULD NOT BE USED AS FINAL FIT-UP DIMENSIONS.
8. ALL INTERNAL ATTACHMENTS SHALL WELDED IN ACCORDANCE WITH WPS BE-20 REV 0.
9. ANCHOR BOLT MATERIAL HAS BEEN SPECIFIED BY END USER IN ASME CODE CALCULATIONS. ANCHOR BOLT & FOUNDATION DESIGN NOT PROVIDED IN PES' OR BES' SCOPE OF SUPPLY.
10. ALL PARTS WELDED TO THE SHELL, SHALL BE MADE OF THE SAME MATERIAL AS THE SHELL.
11. ALL MATERIALS FURNISHED SHALL BE IN COMPLIANCE WITH PROJECT SPEC SPEC-ENGMQ042, "MATERIAL CERTIFICATION AND RETESTING REQUIREMENTS."
12. ALL TEMPORARY ATTACHMENTS SHALL BE REMOVED BEFORE HYDROTEST.
13. REPAD ATTACHMENT WELDS AND ACCESSIBLE SURFACES OF INSIDE NOZZLE TO VESSEL WALL WELDS SHALL BE TESTED FOR THE ABSENCE OF LEAKS WITH A GAUGE PRESSURE OF 15 PSIG (100 KPA) DRY AIR OR NITROGEN AND BUBBLE FORMING SOLUTION.
14. TOLERANCES SHALL BE IN ACCORDANCE WITH ASME SEC VIII DIV.1 AND AS PER FIG.2 OF SPECIFICATION A8KM-PP-000-50801-A.
15. ALL WELDS ATTACHING THE LIFTING LUG AND TAILING LUG TO THE EQUIPMENT SHALL BE MT OR PT EXAMINED.

REVISIONS			
REV.	BY	DESCRIPTION	DATE
0	SF	ISSUE FOR CONSTRUCTION	6/20/2023
1	SF	ISSUE FOR CONSTRUCTION	2/5/2024

PALL Corporation
PALL.com

PRACTICAL ENGINEERING SOLUTIONS LLC
P.O. BOX 51564
LAFAYETTE, LA 70505
PHONE: (337) 408-3242
EMAIL: info@eng-pes.com
www.eng-pes.com

DRAWING DESCRIPTION:
24" O.D. x 7'-6" S/S
270 PSIG/FV @ 300°F
18-FD-260 / 261
Lean Amine Filter

CLIENT DRAWING #:
EN207121-PALLCO-9V3-00022

PES DRAWING #:
PES-21-DF-2761-002

DRAWN BY:	APPROVED BY:	DATE:
SL	TC	6/20/2023
SCALE:	SHEET:	REV:
N/A	4 OF 4	1

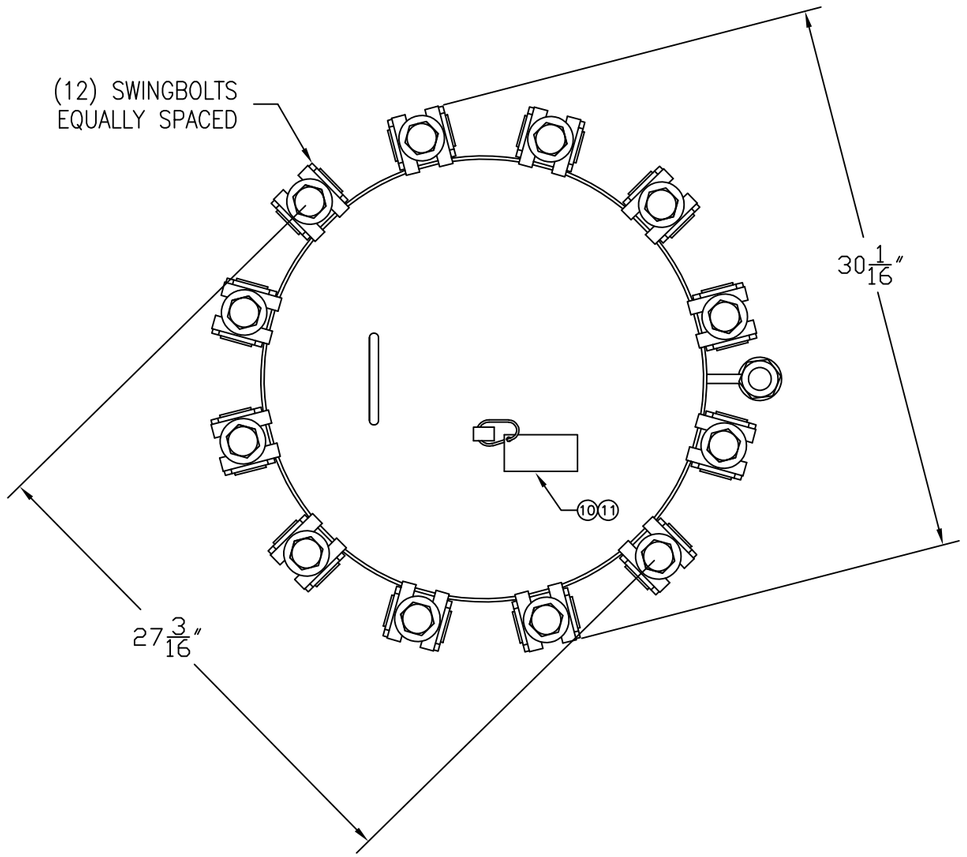

Nevis Pipeline Products, LLC
PO Box 2088, Tomball
Texas, 77377, USA
Tel# 832-632-4450

U
PART

Certified by: NPPLLC
Serial Number: 4608-1 THRU 2

BOM ITEM 11
NAMEPLATE DETAIL

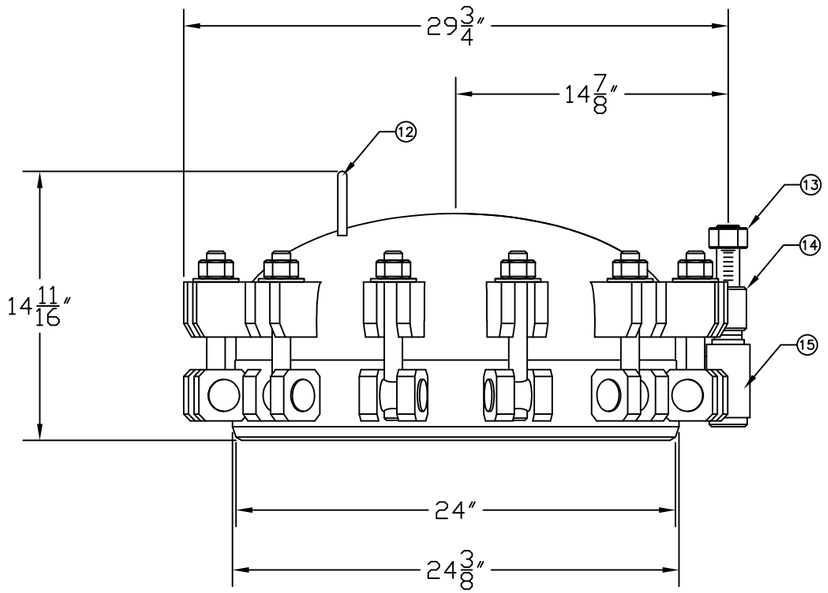

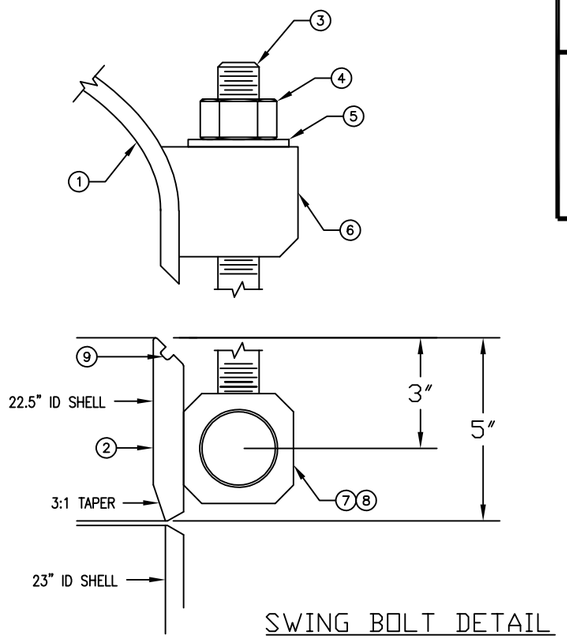

SWING BOLT DETAIL

BILL OF MATERIALS

ITEM	NAME	QTY.	DESCRIPTION	MATERIAL
1	HEAD	1	24" NOM ASME 2:1 SEMI ELLIP HEAD: SEE DWG 4608-A2	SA-516 GR 70
2	RING FLANGE	1	FORGED RING: SEE DWG 4608-A2	SA-106 GR B
3	STUD	12	1" - 8 XYLAN PLATED SEE DWG 4608-A3	SA-193-B7M
4	NUT	12	1" - 8 HEAVY HEX NUT XYLAN PLATED	SA-194-2HM
5	WASHER	12	1" PLAIN FLAT WASHER XYLAN PLATED	SA-36
6	LUG	24	PROFILE CUT PLATE - SEE DWG 4608-A5	SA-516 GR 70
7	BOLT RING	24	PROFILE CUT PLATE - SEE DWG 4608-A5	SA-516 GR 70
8	PIN	12	SWING PIN XYLAN PLATED - SEE DWG 4608-A3	SA-193-B7
9	GASKET	1	24" O-RING COVER GASKET P/N: 24-A-150-03V	VITON
10	TAG LUG	1	CLOSURE TAG PLATE LUG	SA-106 GR B
11	NAMEPLATE	1	CLOSURE TAG PLATE	SS316
12	HANDLE	1	HANDLE - MFG STD 3" MIN CLEARANCE	SA-36
13	JACK SCREW	1	1-1/4" JACK SCREW ASSEMBLY - MFG STD	SA-36
14	NUT	1	1-1/4" DAVIT NUT & BRACKET ASSEMBLY. MFG STD	SA-36
15	SOCKET	1	1-1/4" DAVIT SOCKET - MFG STD	SA-106 GR B

DESIGN DATA

CONSTRUCTION IN ACCORDANCE WITH:
ASME VIII 2023 EDITION
CODE STAMPED: YES NATIONAL BOARD: NO

DESIGN PRESSURE:
INTERNAL: 320 PSIG AT 300 °F
MDMT: -20 °F AT 320 PSIG
CORROSION ALLOWANCE: 0.125"

Internal design pressure and MAWP are the same for closures as per resolution provided by vendor as closure is standard part

SURFACE PREP./PAINTING REQUIREMENTS

INTERNAL COATING: NONE
EXTERNAL COATING: MECHANICAL CLEAN ONLY
SEALING SURFACE: COATED WITH LITHIUM BASED GREASE

Coating same as equipment confirmed by vendor

SERIAL NUMBER: 4608-1 THRU 2

QTY: 2 PCS

Nevis Pipeline Products, LLC.
PO Box 2088, Tomball, TX, 77377-2088
Tel # 832-632-4450

Drawing Title	24" Series AD - Vertical		
Drawing Number	4608-A1	**Rev**	0
Issued By	SAM	**Date**	1/16/2024

This drawing is the property of Nevis Pipeline Products, LLC. and must not be used nor copied without their specific written permission.