REVISION HISTORY					
ZONE	REV	ECN	DESCRIPTION	DATE	APPROVAL
–	01	5052047	PRELIMINARY RELEASE	2022/09/15	B. KELLY
–	02	1158415	INITIAL RELEASE	2023/06/13	JD/EZ
–	03	1160134	ADD MAX FORCE MOMENTS CHART, REMOVED NOTE 3.	2023/07/24	JD/EZ
–	04	1164046	ADDED ROTATION ARROW, EXPANDED NOTE 4 TO INCLUDE MOTOR BEARING OIL FLOW RATE, REVISED NOTE 7 TO REFERENCE AAIL-2957	2023/10/20	EZ/AH
A7	05	1165237	UPDATED VIEW A-A FOR RE-DESIGN OF OIL FAN ASSEMBLY	2023/11/21	EJZ

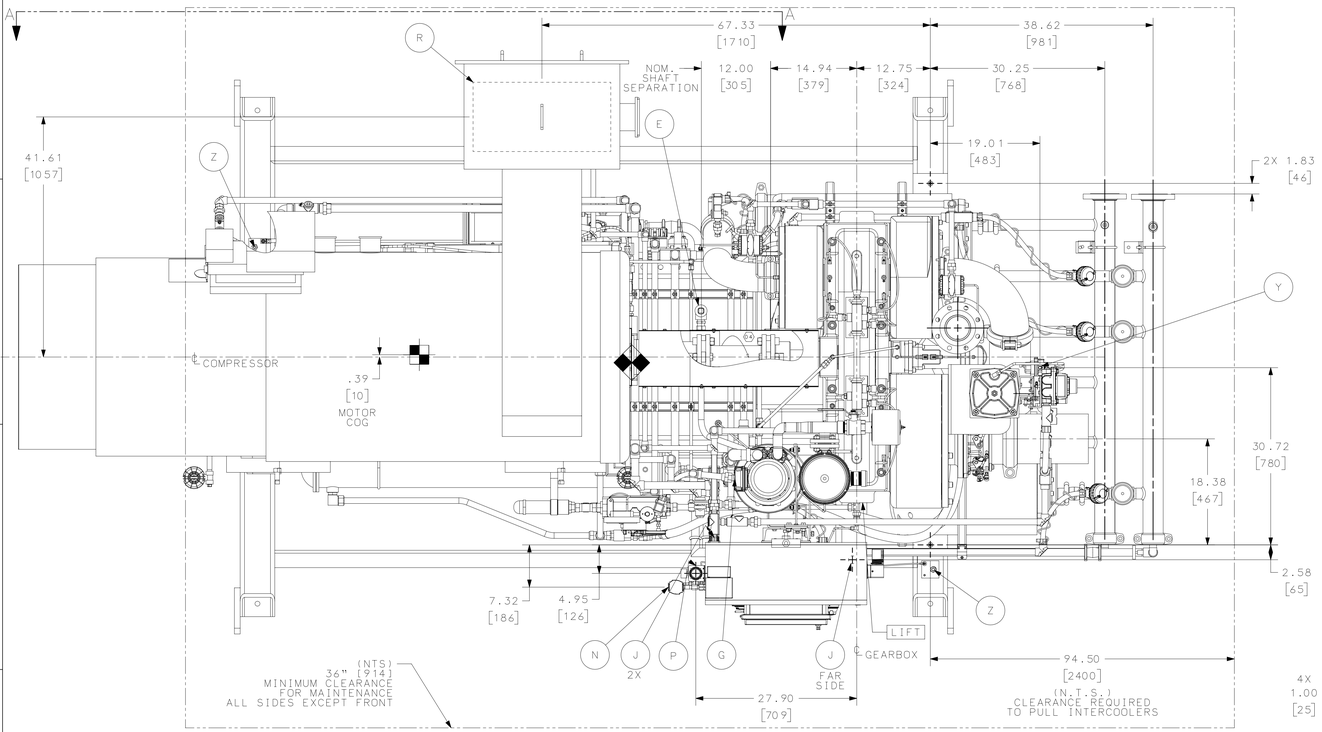

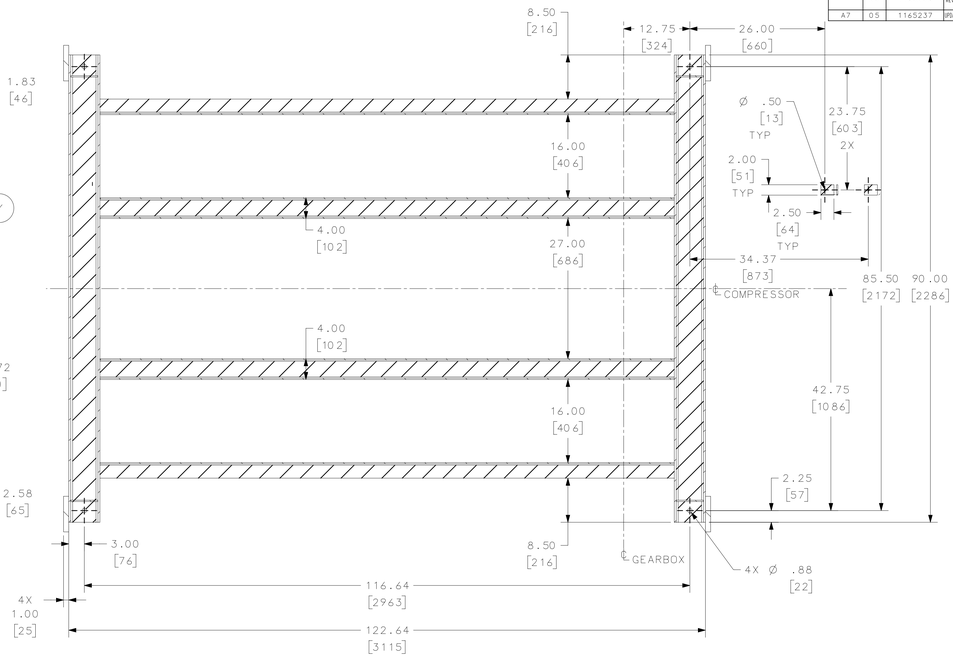

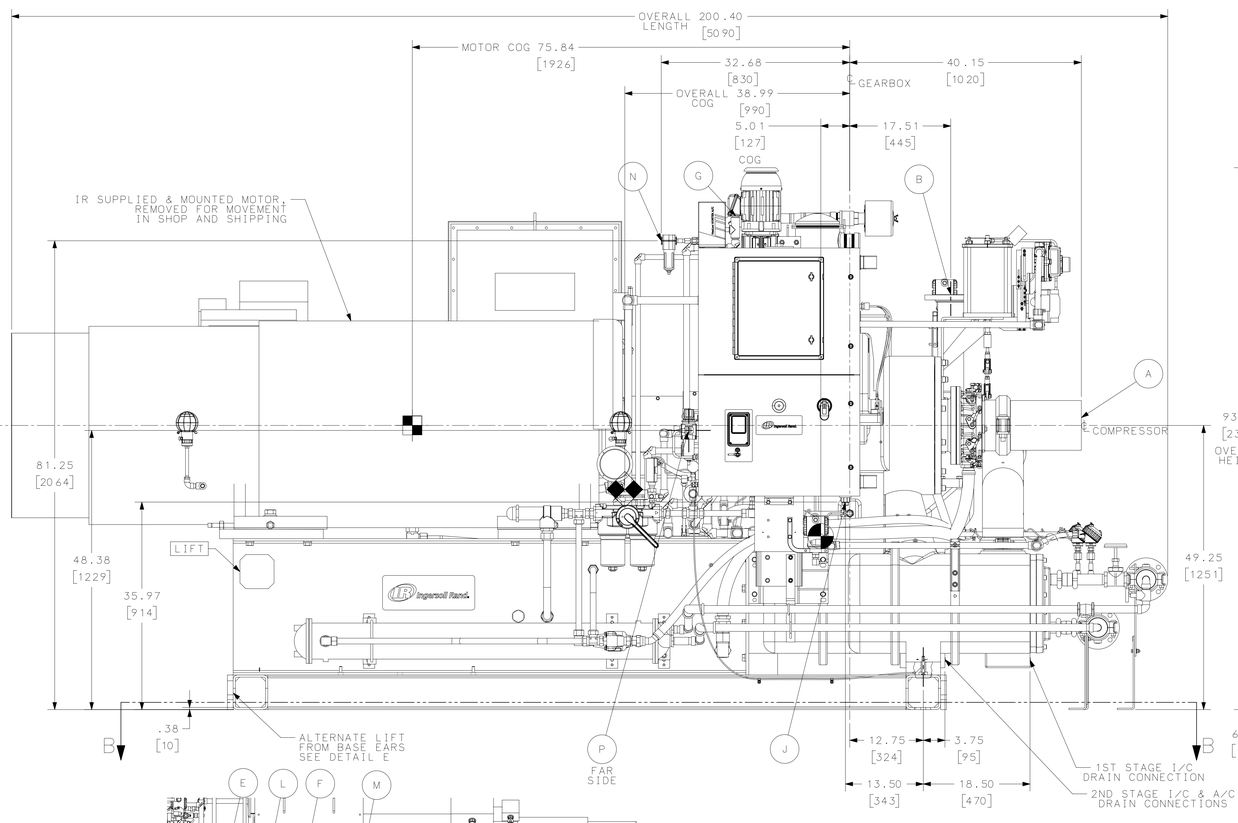

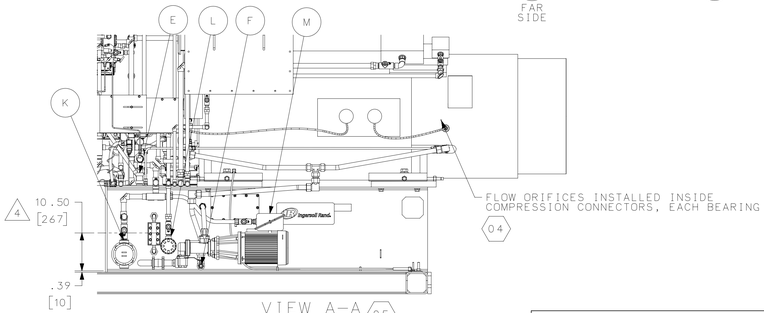

VIEW A-A 05

FOUNDATION DETAIL

(SHADED AREA REPRESENTS CONTACT WITH FOUNDATION)

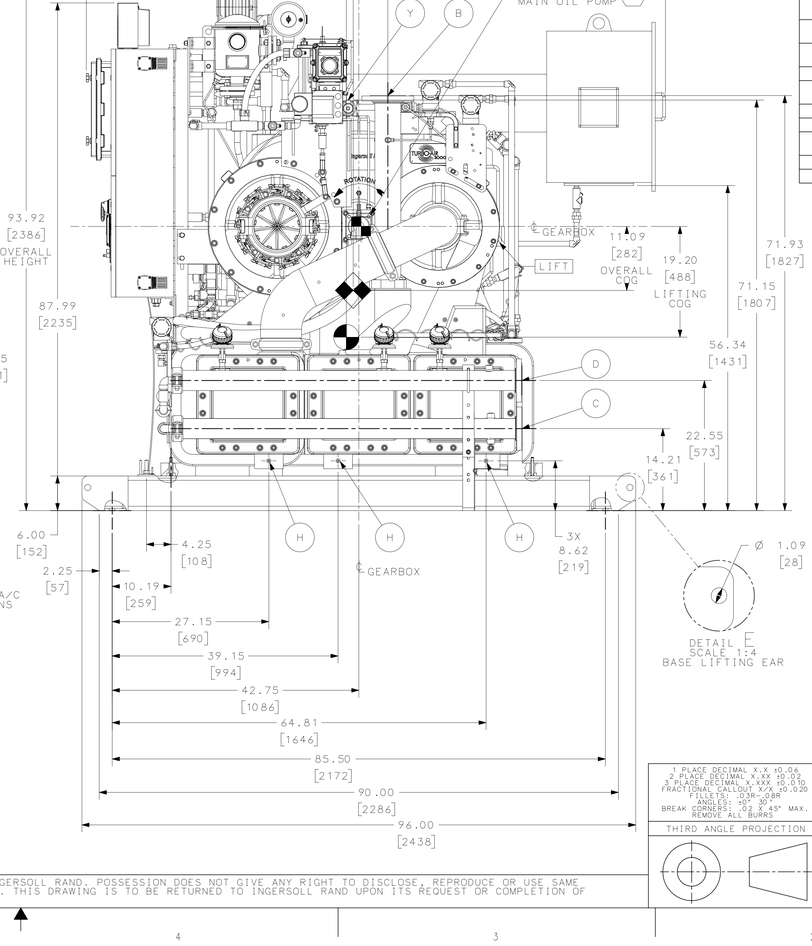

DETAIL E
SCALE 1:4
BASE LIFTING EAR

CUSTOMER CONNECTIONS

ITEM	CONNECTION	DESCRIPTION
A	COMPRESSOR INLET	8" PLAIN END PIPE
B	COMPRESSOR DISCHARGE	4"–150# RF FLANGE
C	COOLING WATER INLET	3"–150# RF FLANGE
D	COOLING WATER DISCHARGE	3"–150# RF FLANGE
E	OIL TANK – FILL	1" NPTF TEE (PLUGGED)
F	OIL TANK – DRAIN VALVE	3/4" NPTF (PLUGGED)
G	EVC – ELECTRICAL ACCESS	WIRED BY INGERSOLL RAND
H	CONDENSATE DRAIN – INTERCOOLERS	1/2" NPT (PLUGGED)
J	CONTROL PANEL – ELECTRICAL ACCESS	1" NPTF (CONDUIT HUB)
K	OIL HEATER – ELECTRICAL ACCESS	WIRED BY INGERSOLL RAND
L	OIL LEVEL SWITCH	WIRED BY INGERSOLL RAND
M	AUX OIL PUMP MOTOR – ELECTRICAL ACCESS	WIRED BY INGERSOLL RAND
N	PANEL COOLER	3/8" NPTF
P	PANEL Z-PURGE	3/8" NPTF
R	DRIVE MOTOR – ELECTRICAL ACCESS	GLAND PLATE– DRILLED IN FIELD
Y	PNEUMATIC IGV	1/4" NPT
Z	EARTH GROUND	5/8–11UNC X 2" LONG STUD

03

MAXIMUM FORCE AND MOMENT CHART

ITEM	FLANGE SIZE & CLASS	MAXIMUM FORCE	MAXIMUM MOMENT
A	8" 150#	660 LB 2936 N	1000 FT-LB 1356 NM
B	4" 150#	330 LB 1468 N	500 FT-LB 678 NM
C, D	3" 150#	330 LB 1468 N	500 FT-LB 678 NM

PACKAGE TAGS:
22590: 18-PK-1801
22591: 18-PK-1839

NOTES:

1. THE PURCHASER IS TO PROVIDE FOUNDATION BOLTS, NUTS, SHIMS, AS WELL AS INLET/DISCHARGE PIPING.
2. DIMENSIONS ARE IN INCHES [MM]. ALL DIMENSIONS ARE LIMITED TO A TOLERANCE OF ±.25"[6] UNLESS LIMIT DIMENSIONS APPLY. FINAL PIPING TO THE COMPRESSOR SHOULD BE FIELD FABRICATED TO ENSURE PROPER ALIGNMENT.
3. NOTE REMOVED. SEE MAXIMUM FORCE AND MOMENTS CHART ABOVE.
4. OIL LEVEL OF 10.5" EQUATES TO APPROXIMATELY 55 US GALLONS (208L). THIS COMPRESSOR IS DESIGNED FOR USE WITH INGERSOLL RAND TECHTROL GOLD TL PER AAIL-2957.(A)
5. PACKAGE WEIGHT EXCLUDING THE DRIVER MOTOR IS APPROXIMATELY 13,400 LB (6100Kg). WEIGHT INCLUDING THE DRIVER GROUP IS APPROXIMATELY 24,900 LB (11300Kg).

LIFTING CENTER OF GRAVITY (EXCLUDING DRIVER)

MOTOR CENTER OF GRAVITY

OVERALL CENTER OF GRAVITY

THIS DRAWING AND THE CONFIDENTIAL TRADE SECRET INFORMATION ON IT ARE THE PROPERTY OF INGERSOLL RAND. POSSESSION DOES NOT GIVE ANY RIGHT TO DISCLOSE, REPRODUCE OR USE SAME FOR ANY PURPOSE OTHER THAN THAT GRANTED BY EXPRESS WRITTEN PERMISSION OF INGERSOLL RAND. THIS DRAWING IS TO BE RETURNED TO INGERSOLL RAND UPON ITS REQUEST OR COMPLETION OF AUTHORIZED USE.

.1 PLACE DECIMAL X.X ±0.04
.2 PLACE DECIMAL X.XX ±0.02
.3 PLACE DECIMAL X.XXX ±0.010
FRACTIONAL CALLOUT X/X ±0.020
FILLETS: .03R–.08R
BREAK CORNERS: .01 X 45° MAX.
REMOVE ALL BURRS

THIRD ANGLE PROJECTION

DRAFTER: J. DOWD	DATE 2022/09/15	
CHECKER: E. ZAGMESTER	DATE 2022/09/15	
ENGINEER: E. ZAGMESTER	DATE 2022/09/15	
APPROVAL: B. KELLY	DATE 2022/09/15	
DRAWING PER ASME Y14.5–1994 DIMENSIONS IN INCHES UNLESS OTHERWISE SPECIFIED		

Ingersoll Rand.

INSTALLATION_ARRANGEMENT TURBO AIR 3000 (60HZ)

SIZE	NX DRAWING	DWG. NO.	REV
E		AAFF900 1–22590	05

SCALE NONE | 101 BROADWAY, P.O. BOX 209 BUFFALO, NEW YORK 14225-0209, U.S.A. | SHEET 1 OF 1

AAFF900 1-22590 05 1

REVISION HISTORY					
ZONE	REV	ECN	DESCRIPTION	DATE	APPROVAL
–	01	5052047	PRELIMINARY RELEASE	2022/09/15	B. KELLY
–	02	1158415	INITIAL RELEASE	2023/06/13	JD/EZ
–	03	1160134	ADD MAX FORCE MOMENTS CHART. REMOVED NOTE 3.	2023/07/24	JD/EZ
–	04	1164046	ADDED ROTATION ARROW PER AAIL-3997. REVISED NOTE 6 AND ADDED NOTE 7 PER AAIL-2957. REMOVED NOTE 10 PER ECN 1165237	2023/10/20	EZ/AH
A7	05	1165237	UPDATED NEW A-L FOR RE-DESIGN OF OIL END ASSEMBLY	2023/11/21	EJZ

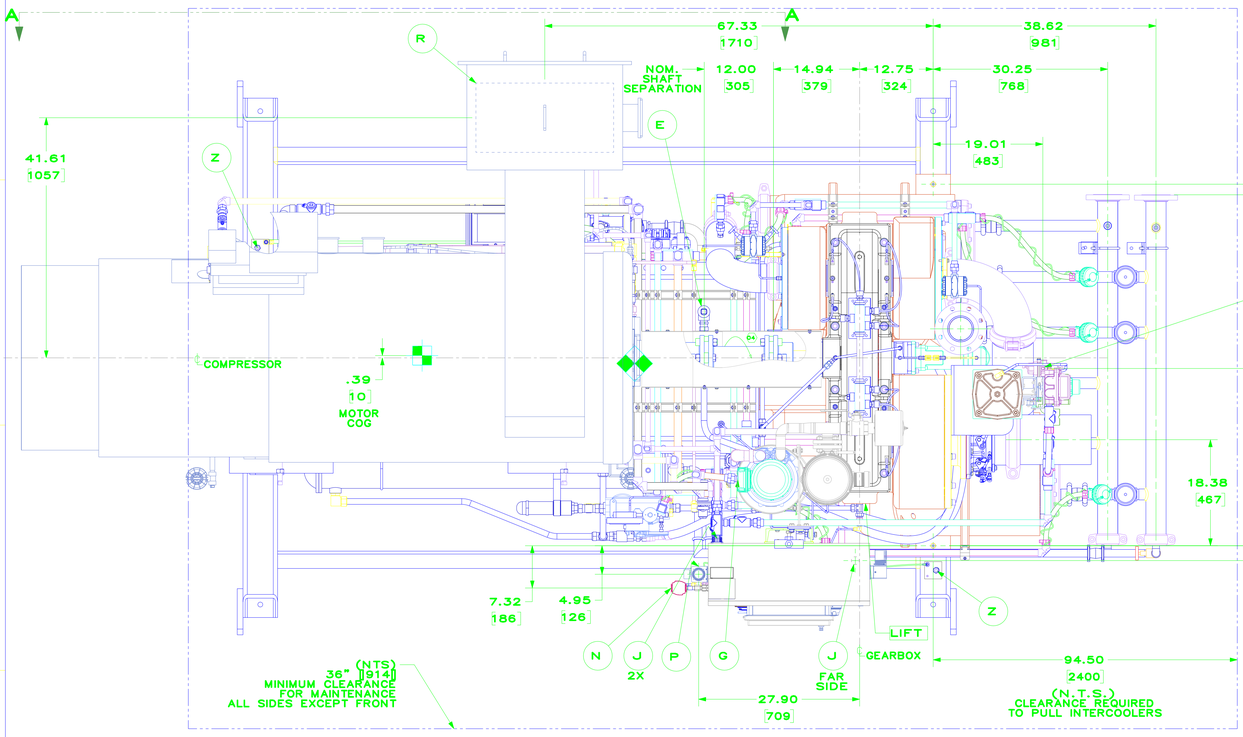

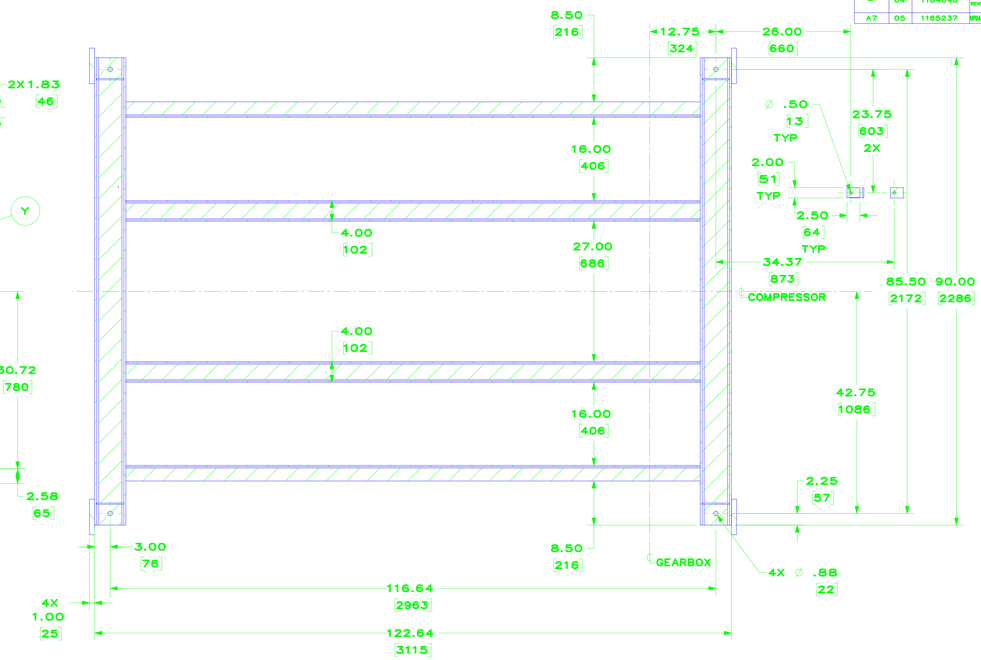

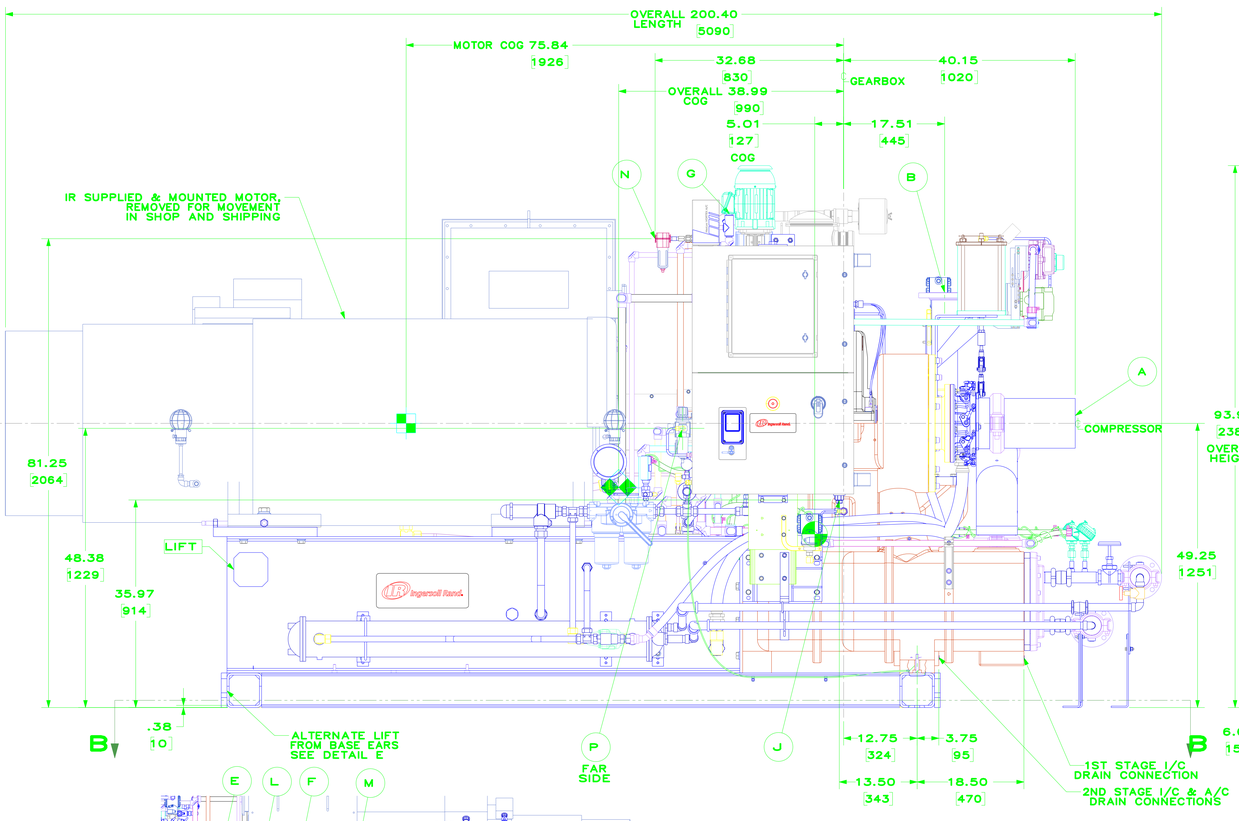

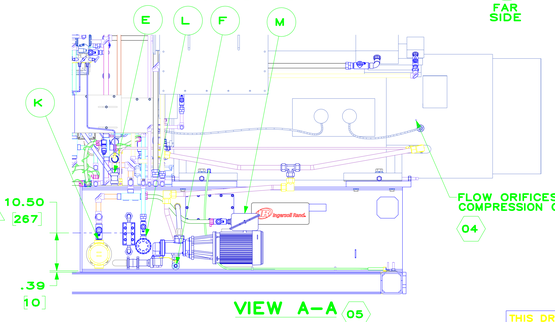

FOUNDATION DETAIL

(SHADED AREA REPRESENTS CONTACT WITH FOUNDATION)

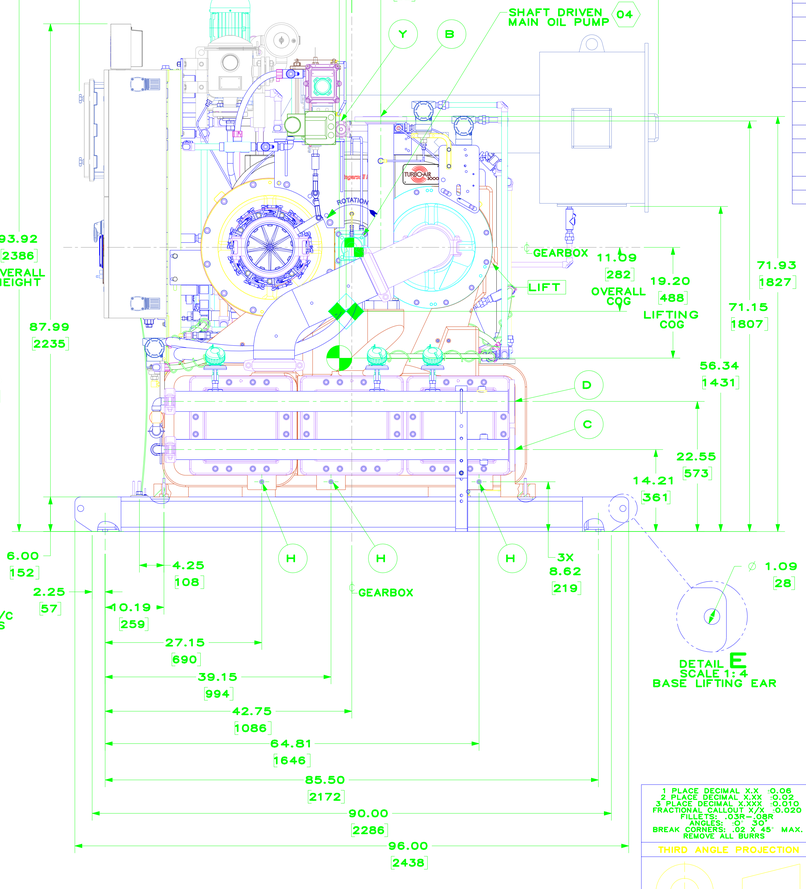

CUSTOMER CONNECTIONS

ITEM	CONNECTION	DESCRIPTION
A	COMPRESSOR INLET	8" PLAIN END PIPE
B	COMPRESSOR DISCHARGE	4"–150# RF FLANGE
C	COOLING WATER INLET	3"–150# RF FLANGE
D	COOLING WATER DISCHARGE	3"–150# RF FLANGE
E	OIL TANK – FILL	1" NPTF TEE (PLUGGED)
F	OIL TANK – DRAIN VALVE	3/4" NPTF (PLUGGED)
G	EVC – ELECTRICAL ACCESS	WIRED BY INGERSOLL RAND
H	CONDENSATE DRAIN – INTERCOOLERS	1/2" NPT (PLUGGED)
J	CONTROL PANEL – ELECTRICAL ACCESS	1" NPTF (CONDUIT HUB)
K	OIL HEATER – ELECTRICAL ACCESS	WIRED BY INGERSOLL RAND
L	OIL LEVEL SWITCH	WIRED BY INGERSOLL RAND
M	AUX OIL PUMP MOTOR – ELECTRICAL ACCESS	WIRED BY INGERSOLL RAND
N	PANEL COOLER	3/8" NPTF
P	PANEL Z–PURGE	3/8" NPTF
R	DRIVE MOTOR – ELECTRICAL ACCESS	GLAND PLATE– DRILLED IN FIELD
Y	PNEUMATIC IGV	1/4" NPT
Z	EARTH GROUND	5/8–11UNC X 2" LONG STUD

03 MAXIMUM FORCE AND MOMENT CHART

ITEM	FLANGE SIZE & CLASS	MAXIMUM FORCE	MAXIMUM MOMENT
A	8" 150#	660 LB 2936 N	1000 FT–LB 1356 NM
B	4" 150#	330 LB 1468 N	500 FT–LB 678 NM
C, D	3" 150#	330 LB 1468 N	500 FT–LB 678 NM

PACKAGE TAGS:
22590: 18–PK–1801
22591: 18–PK–1839

NOTES:

1. THE PURCHASER IS TO PROVIDE FOUNDATION BOLTS, NUTS, SHIMS, AS WELL AS INLET/DISCHARGE PIPING.
2. DIMENSIONS ARE IN INCHES [MM]. ALL DIMENSIONS ARE LIMITED TO A TOLERANCE OF 0.25 [6] UNLESS LIMIT DIMENSIONS APPLY. FINAL PIPING TO THE COMPRESSOR SHOULD BE FIELD FABRICATED TO ENSURE PROPER ALIGNMENT.
3. NOTE REMOVED. SEE MAXIMUM FORCE AND MOMENTS CHART ABOVE.
4. OIL LEVEL OF 10.5" EQUATES TO APPROXIMATELY 55 US GALLONS (208L). THIS COMPRESSOR IS DESIGNED FOR USE WITH INGERSOLL RAND TECHTROL GOLD TL PER AAIL–2957.04
5. PACKAGE WEIGHT EXCLUDING THE DRIVER MOTOR IS APPROXIMATELY 13,400 LB (6100Kg). WEIGHT INCLUDING THE DRIVER GROUP IS APPROXIMATELY 24,900 LB (11300Kg).

LIFTING CENTER OF GRAVITY (EXCLUDING DRIVER)

MOTOR CENTER OF GRAVITY

OVERALL CENTER OF GRAVITY

THIS DRAWING AND THE CONFIDENTIAL TRADE SECRET INFORMATION ON IT ARE THE PROPERTY OF INGERSOLL RAND. POSSESSION DOES NOT GIVE ANY RIGHT TO DISCLOSE, REPRODUCE OR USE SAME FOR ANY PURPOSE OTHER THAN THAT GRANTED BY EXPRESS WRITTEN PERMISSION OF INGERSOLL RAND. THIS DRAWING IS TO BE RETURNED TO INGERSOLL RAND UPON ITS REQUEST OR COMPLETION OF AUTHORIZED USE.

1 PLACE DECIMAL X.X ±0.06
2 PLACE DECIMAL X.XX ±0.02
3 PLACE DECIMAL X.XXX ±0.010
FRACTIONAL CALLOUT X/X ±0.020
FILLETS: .03R–.06R
ANGLES: ± 30'
BREAK CORNERS: .02 X 45° MAX. REMOVE ALL BURRS

THIRD ANGLE PROJECTION

DRAFTER: J. DOWD	DATE: 2022/09/15	
CHECKER: E. ZAGMESTER	DATE: 2022/09/15	
ENGINEER: E. ZAGMESTER	DATE: 2022/09/15	
APPROVAL: B. KELLY	DATE: 2022/09/15	
DRAWING PER ASME Y14.5–1994	DIMENSIONS IN INCHES UNLESS OTHERWISE SPECIFIED	

Ingersoll Rand

INSTALLATION_ARRANGEMENT TURBO AIR 3000 (60HZ)

E | NX DRAWING | DWG. NO. AAFF9001–22590 | SCALE NONE | SHEET 1 OF 1

800 BEAUTY WAY, P.O. BOX 309
BUFFALO, NEW YORK 14225–0309, U.S.A.

AAFF9001–22590