Ingersoll Rand
338 Valley Rd
Mocksville, NC 27028

Level II
Quality Documentation Package

Date:	02/08/2024
Customer:	Air Products
User:	Air Products
Compressor Model:	TA3000
Customer Order Number:	4505773730
Compressor Serial Number:	22590

Ingersoll Rand
338 Valley Rd
Mocksville, NC 27028

22590 - TABLE OF CONTENTS

TAB NUMBER	DOCUMENT
1.	Material Specifications (castings, gearing, rotor assemblies)
2.	Material Certificates (castings, gearing, impellers)
3.	Gearbox Hydrostatic Test Certificate
4.	Control Panel Functional Certificate
5.	Lube System Cleanliness Certificate
6.	Oil System Functional (leak) Test Certificate
7.	Certificate of Quality
8.	Certificate of Compliance
9.	U-1 Forms
10.	Driver Test Certificate
11.	Quality Verification Report
12.	Standard Certificate of Test
13.	Mechanical Test and Design Point Data Results
14.	Test Procedure

Ingersoll Rand
338 Valley Rd
Mocksville, NC 27028

DOCUMENT 1A: MATERIAL SPECIFICATIONS: CASTING

Date:	02/08/2024
Customer:	Air Products
User:	Air Products
Compressor Model:	TA3000
Customer Order Number:	4505773730
Compressor Serial Number:	22590

TO WHOM IT MAY CONCERN:

Ingersoll Rand hereby certifies the gearbox conforms to applicable specifications: AAIL-648, ASTM A536 (cover only).

- Gearbox: Cover 23011122; 80-55-6 Ductile Iron
- Gearbox: Base 23021512; 80-55-6 Ductile Iron

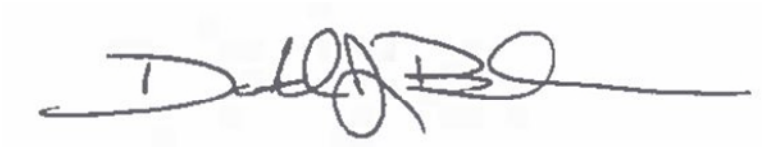

Don Bauch
PAC Quality Engineer
Ingersoll Rand

普什联动科技有限公司
PUSH LINKO TECHNOLOGY CO.,LTD.
ADD.5#HUANYANG,YUEJIANG YIBIN,SICHUAN,CHINA
ZIP:645152 TEL:(0831)5352019 FAX:(0831)5352002

CERTIFICATE OF QUALITY

产品质量证明书

CC Part Number	AAA3409071-15243
Part Description	TA3000 60 HZ GEARBOX MACHINED
Purchase Order #	30016280-60
Serial Number	Base- PF23021512 Cover- 23011122
Client Name 客户名称	Ingersoll-Rand Company
Inspector 检验员	Wei Yong/Gan Lichun 魏勇　甘利春
Auditor 审核员	Zhang Hao/Ma Wei 张浩/马委
Date of Report 日期	2023.04.24

REVISION HISTORY					
ZONE	REV	ECO NO	DESCRIPTION	DATE	APPROVED
------	01	4573269	REDRAWN IN NX & SYNC WITH SAP MATERIAL MASTER	2013/10/29	EJZ/SRC
------	02	4573345	THIS DRAWING SUPERSEDES AAP379809-0240DG. CHANGE THE MOUNTING SIDE SLOT FROM 1.06" MAX. TO 1.42" MAX. ADDED BASLINE FOR COOLER SURFACE MACHINING CALL OUT. NOTE 1 REVISED AND SITE NOW 720.33' WAS 28.34 COOLER DEPTH DIMEN ADDED & NOTE 6	2013/11/04	EJZ/SRC
------	03	4753986	CORRECTED 5/16 C'BORE TO BE FROM BOTTOM OF G/B COVER (DETAIL A)	2015/10/02	EJZ/SRC

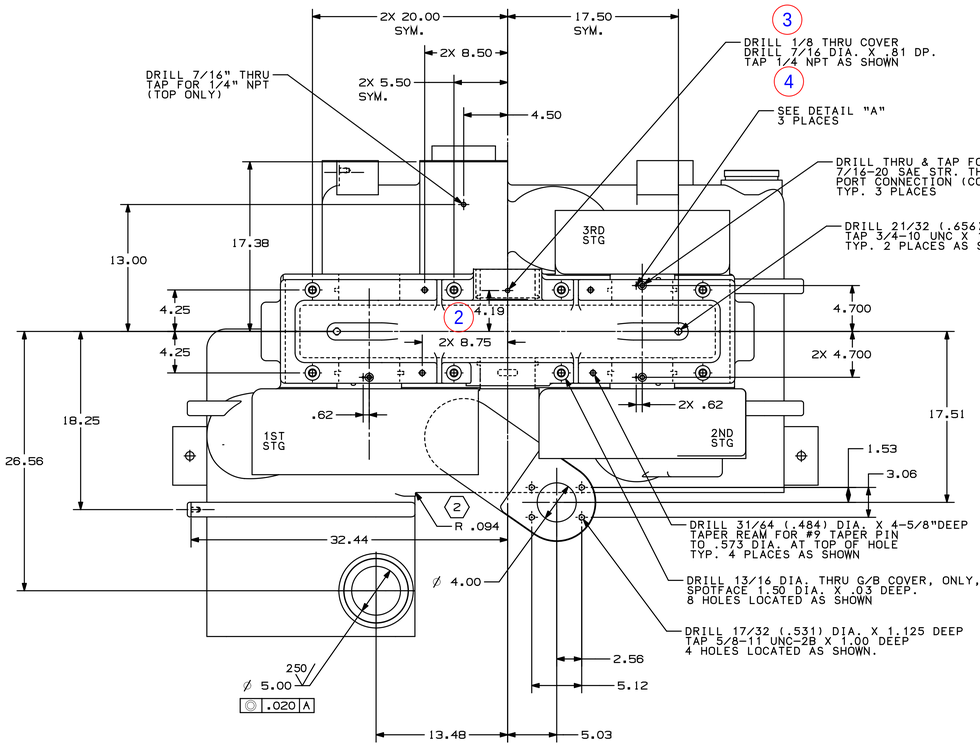

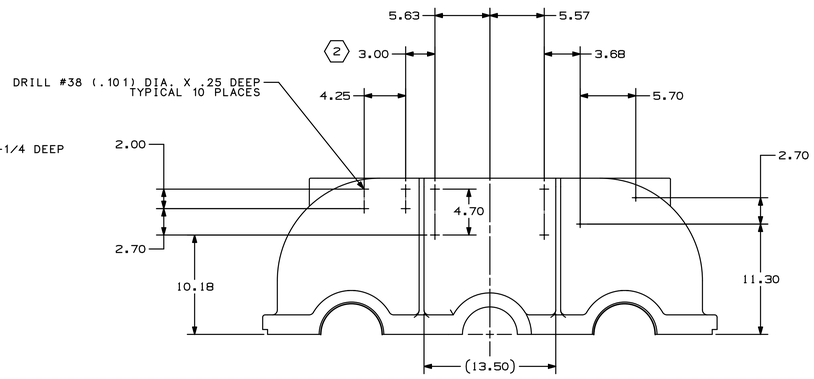

GEARBOX COVER MACHINING
FRONT OF COVER

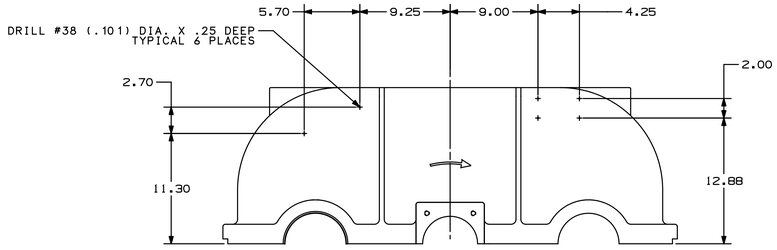

GEARBOX COVER MACHINING
BACK OF COVER

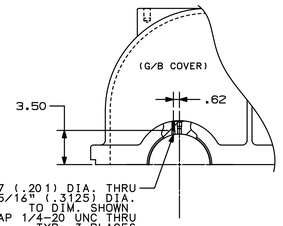

DETAIL "A"

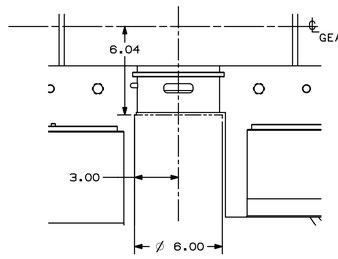

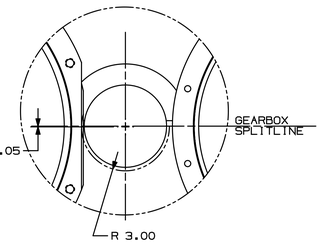

DETAIL "C"

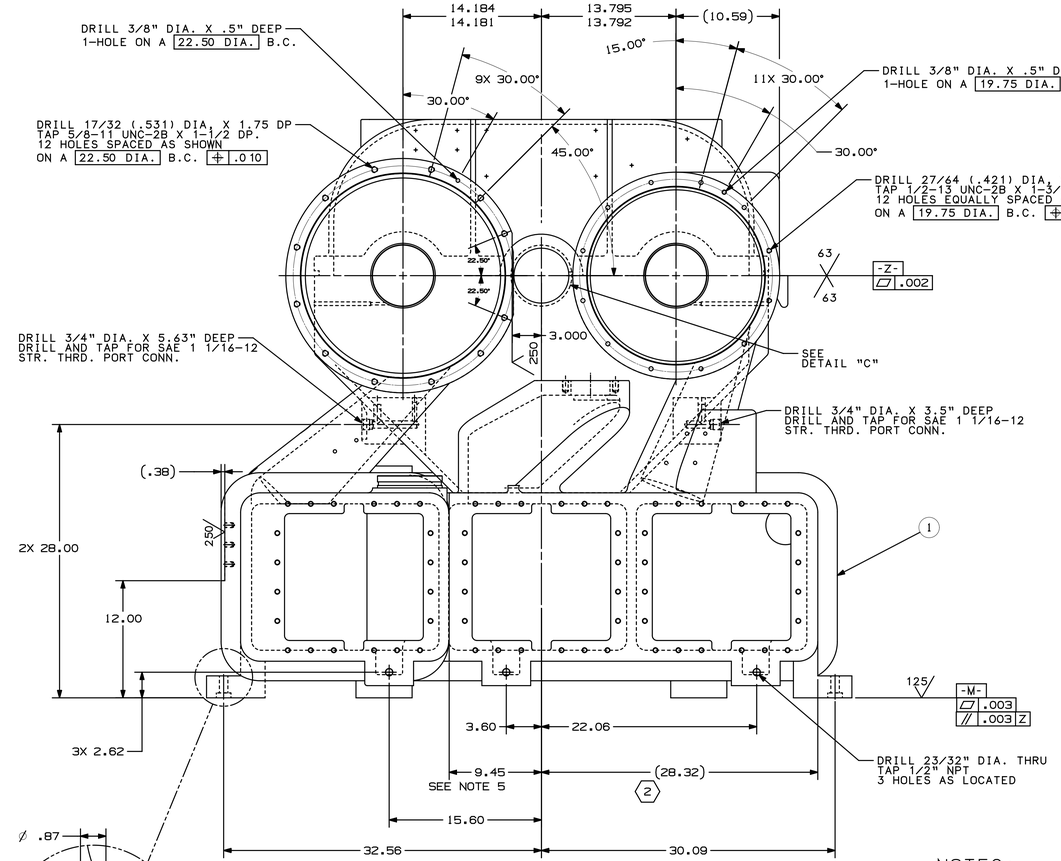

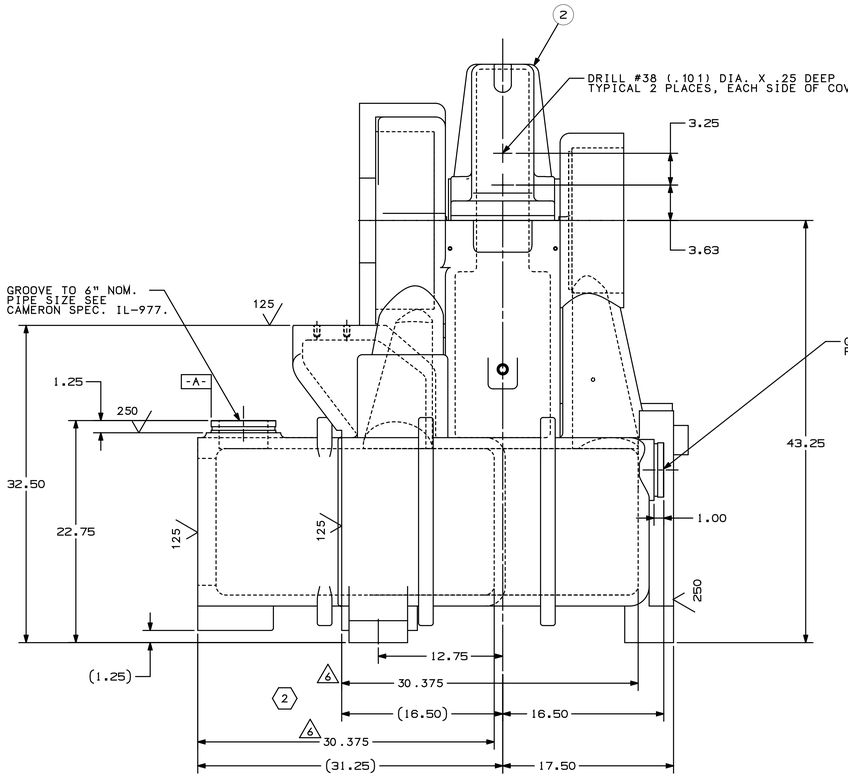

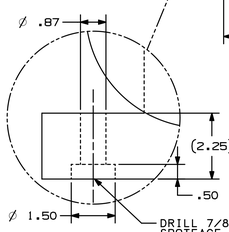

NOTES:

1. INITIAL MACHINING TO BE STARTED USING SURFACE Z.
2. TORQUE SPLITLINE BOLTS TO 125-150 FT-LBS PRIOR TO MACHINING (THREADS TO BE LUBRICATED WITH MOLYKOTE).
3. BREAK SHARP EDGES AT .03
4. THIS DWG. USED IN CONJUCTION WITH CAMERON SPEC. IL-977, PIPE GROOVING.
5. SURFACE MUST BE MACHINED TO DIMENSION FOR COOLER ASSEMBLY.
6. COOLER DEPTH TOLERANCE FOR ALL COOLERS TO BE +/- 3/16"

.1 PLACE DECIMAL X.X ±0.06 .2 PLACE DECIMAL X.XX ±0.02 .3 PLACE DECIMAL X.XXX ±0.010 FRACTIONAL CALLOUT X/X ±0.020 FILLETS: .03R-.08R ANGLES: 45° ±1° BREAK CORNERS: .02 X 45° MAX. REMOVE ALL BURRS THIRD ANGLE PROJECTION	DRAFTER: E. ZAGMESTER	DATE 2013/10/29	CAMERON COMPRESSION SYSTEMS
	CHECKER: E. ZAGMESTER	DATE 2013/10/29	GEARBOX_MACHINED_TA3000(60HZ)
	ENGINEER: S. CASE	DATE 2013/10/29	(1ST STG. REDUCED SCROLL)
	APPROVAL: T. MAZIERSKI	DATE 2013/10/29	E NX DRAWING DWG. NO. AAP379380 9-00360DG
	DRAWING PER ASME Y14.5-1994 DIMENSIONS IN INCHES UNLESS OTHERWISE SPECIFIED		SCALE 1:6 [1ST BROADWAY, P.O. BOX 287, BUFFALO, NEW YORK 14225-0287, U.S.A.] SHEET 1 OF 4

DWG NO AAP379380 9-00360DG REV 1

"THIS DRAWING AND THE CONFIDENTIAL TRADE SECRET INFORMATION ON IT ARE THE PROPERTY OF CAMERON. POSSESSION DOES NOT GIVE ANY RIGHT TO DISCLOSE, REPRODUCE OR USE SAME FOR ANY PURPOSE OTHER THAN THAT GRANTED BY EXPRESS WRITTEN PERMISSION OF CAMERON. THIS DRAWING IS TO BE RETURNED TO CAMERON UPON ITS REQUEST OR COMPLETION OF AUTHORIZED USE."

REVISION HISTORY					
ZONE	REV	ECO NO	DESCRIPTION	DATE	APPROVED
———	01	4573269	REDRAWN IN NX & SYNC WITH SAP MATERIAL MASTER	2013/10/29	EJZ/SRC
———	02	4573345	[illegible]	2013/11/04	EJZ/SRC
———	03	4753986	SEE SH 1 FOR CHANGES	2015/10/02	EJZ/SRC

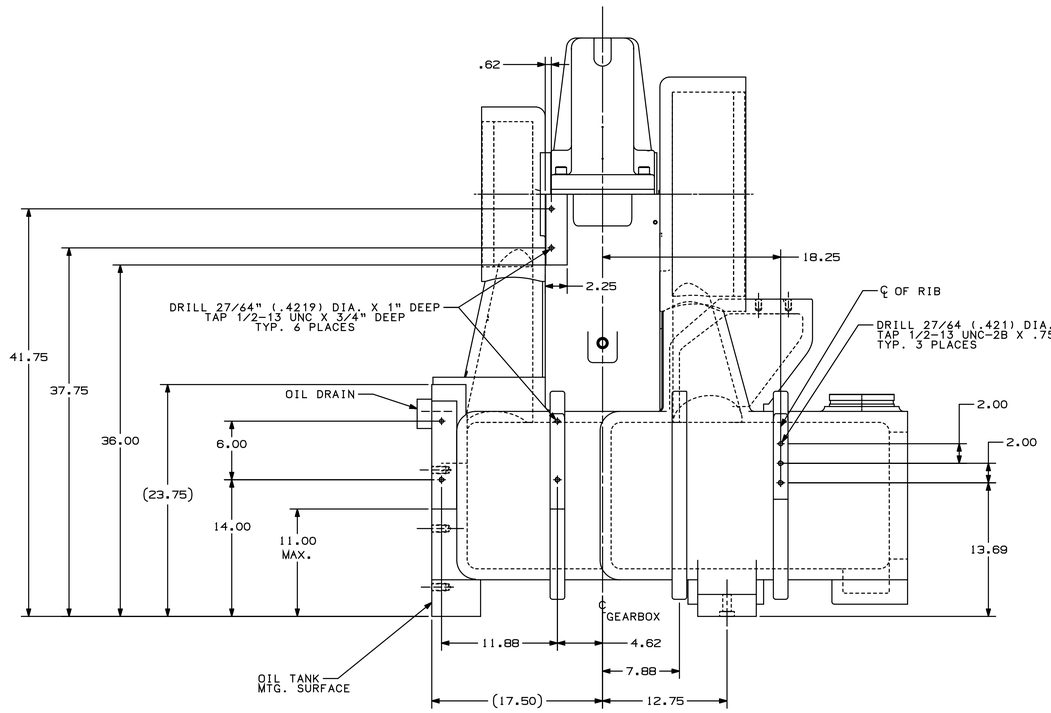

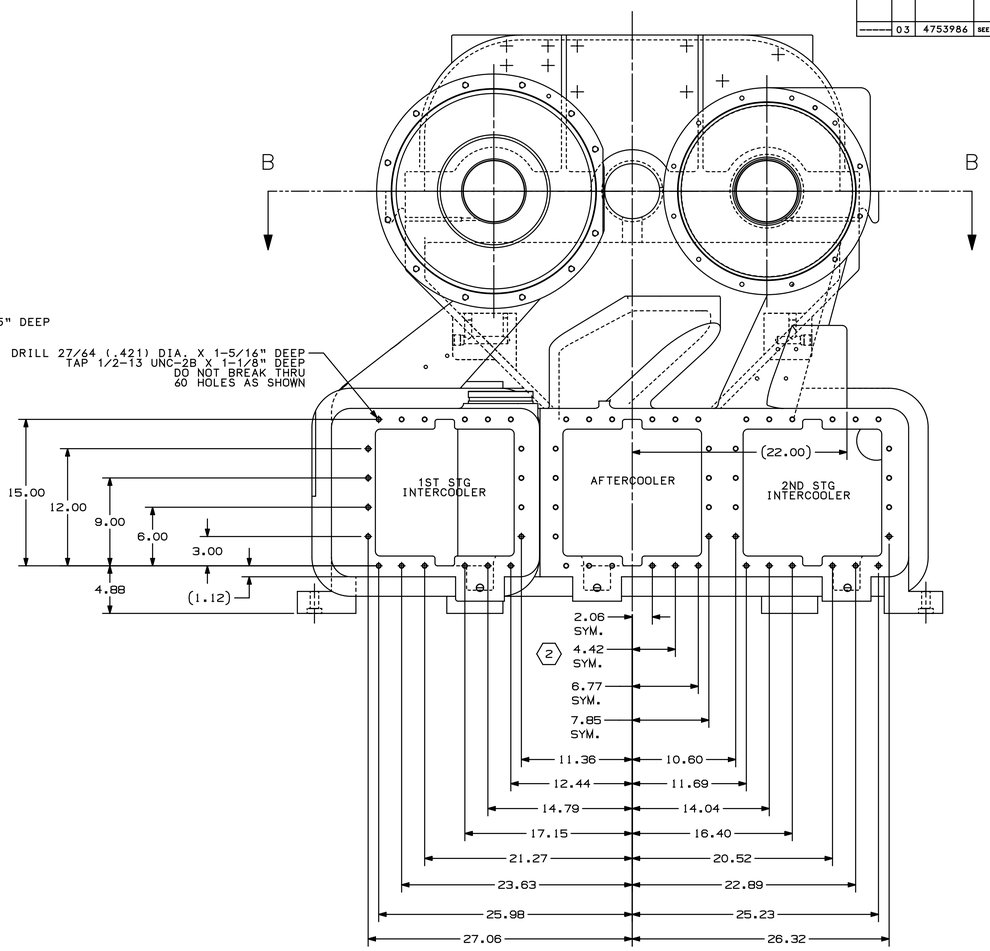

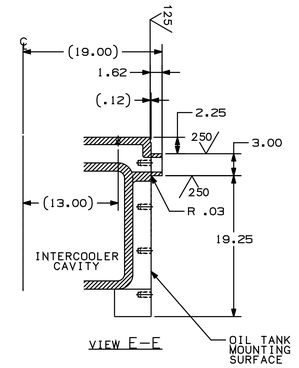

VIEW E-E

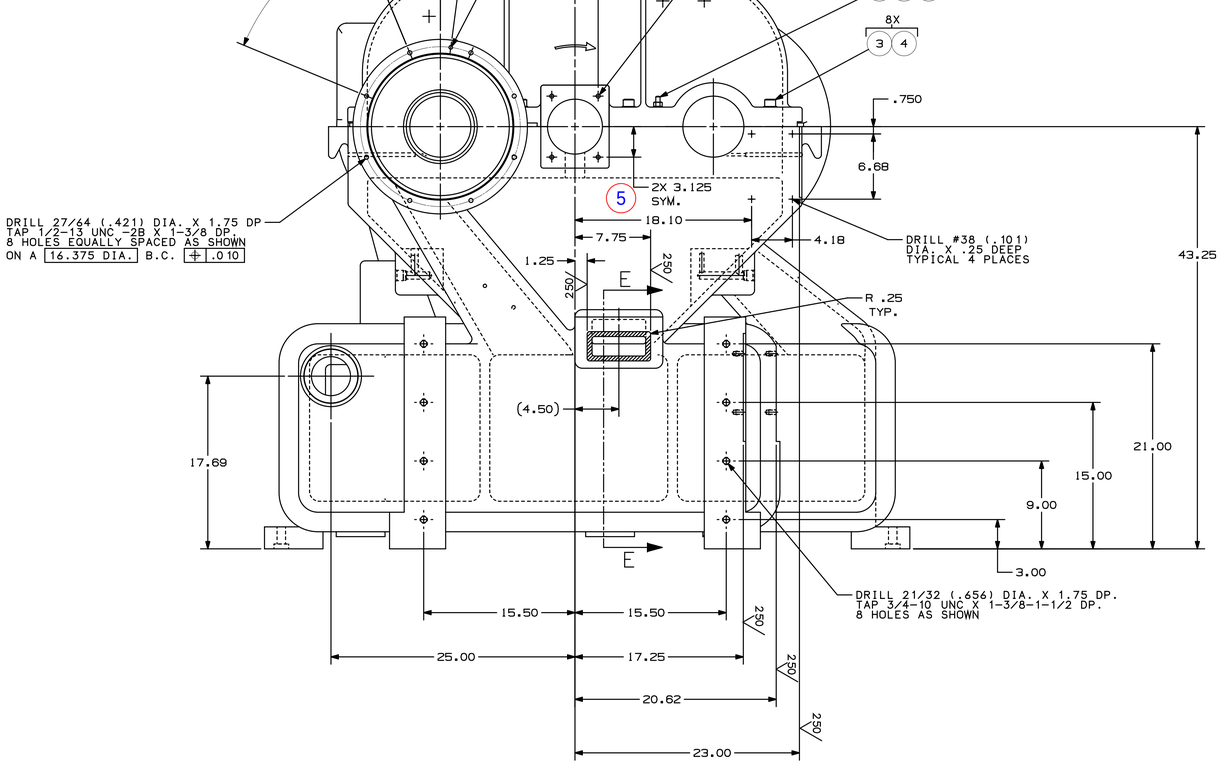

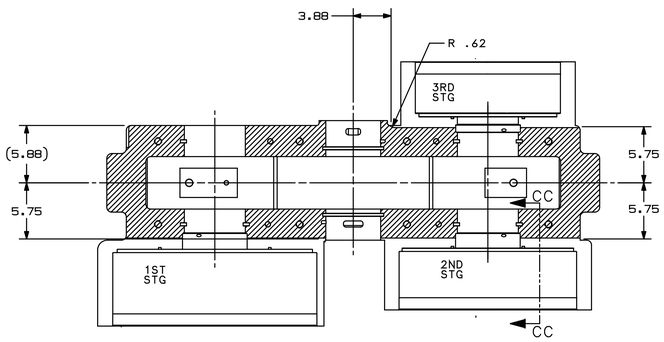

SPECIAL VIEW B-B

FOR SPLITLINE MACHINING OF BASE ONLY
(MACHINED SURFACE DENOTED BY CROSS HATCHING)

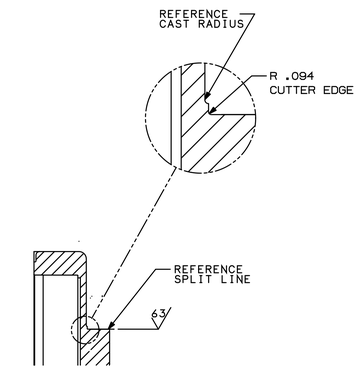

"VIEW CC-CC"

DRW NO. AAP379380 9-00360DG REV 2

"THIS DRAWING AND THE CONFIDENTIAL TRADE SECRET INFORMATION ON IT ARE THE PROPERTY OF CAMERON. POSSESSION DOES NOT GIVE ANY RIGHT TO DISCLOSE, REPRODUCE OR USE SAME FOR ANY PURPOSE OTHER THAN THAT GRANTED BY EXPRESS WRITTEN PERMISSION OF CAMERON. THIS DRAWING IS TO BE RETURNED TO CAMERON UPON ITS REQUEST OR COMPLETION OF AUTHORIZED USE."

1 PLACE DECIMAL X.X ±0.06
2 PLACE DECIMAL X.XX ±0.02
3 PLACE DECIMAL X.XXX ±0.010
FRACTIONAL CALLOUT X/X ±0.020
FILLETS: .03R-.08R
ANGLES: ±0° 30'
BREAK CORNERS: .02 X 45° MAX.
REMOVE ALL BURRS

THIRD ANGLE PROJECTION

DRAFTER: E. ZAGMESTER	DATE 2013/10/29	CAMERON — COMPRESSION SYSTEMS
CHECKER: E. ZAGMESTER	DATE 2013/10/29	GEARBOX_MACHINED_TA3000(60HZ)
ENGINEER: S. CASE	DATE 2013/10/29	(1ST STG. REDUCED SCROLL)
APPROVAL: T. MAZIERSKI	DATE 2013/10/29	
DRAWING PER ASME Y14.5-1994	DIMENSIONS IN INCHES UNLESS OTHERWISE SPECIFIED	E — NX DRAWING — DWG. NO. AAP379380 9-00360DG
SCALE 1:6	1101 BROADWAY, P.O. BOX 209 BUFFALO, NEW YORK 14225-0209, U.S.A.	SHEET 2 OF 4

REVISION HISTORY					
ZONE	REV	ECO NO	DESCRIPTION	DATE	APPROVED
———	01	4573269	REDRAWN IN NX & SYNC WITH SAP MATERIAL MASTER	2013/10/29	EJZ/SRC
———	02	4573345	THIS DRAWING SUPERSEDES AA3793809-03440/05 ADDED DETAIL "J" ADDED DETAIL "G" ADDED DIM. 11.37 & 10.25 TO VIEW B270 CENTERLINE CHANGE "G" TO "X" IN POSITION B270 & B90, NOTE 3 ALSO UPDATED	2013/11/04	EJZ/SRC
———	03	4753986	ALL DISCHARGE HOLES NOW 1/4" NPT, WAS 1/8" NPT	2015/10/02	EJZ/SRC

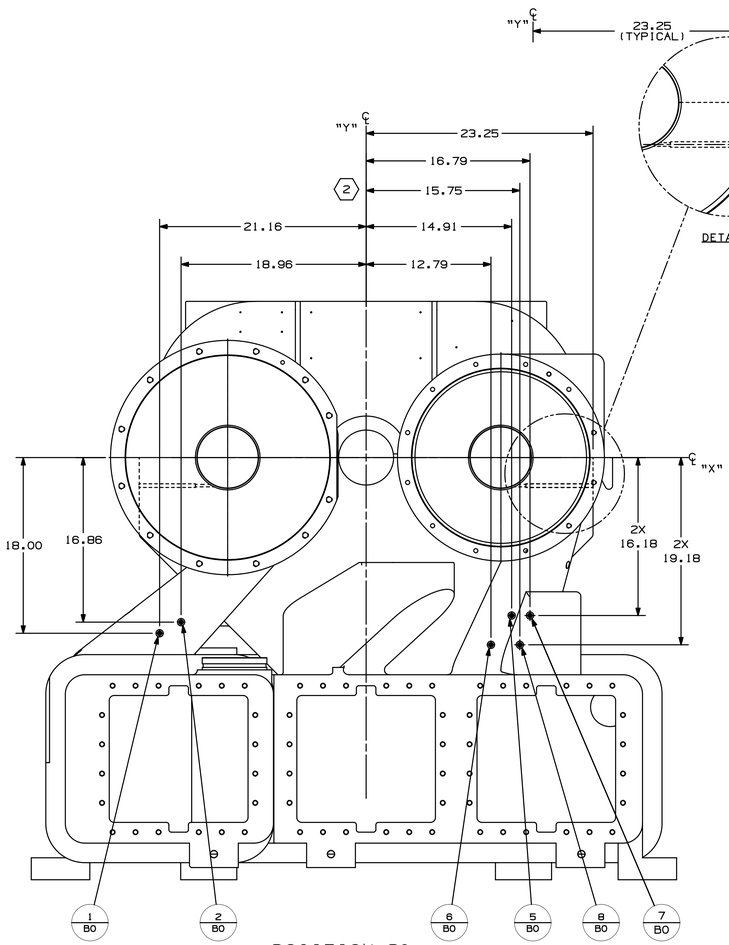

POSITION B0

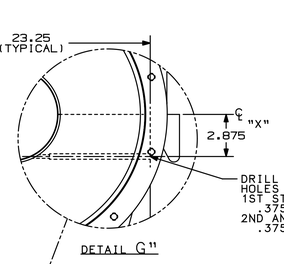

DETAIL "G"

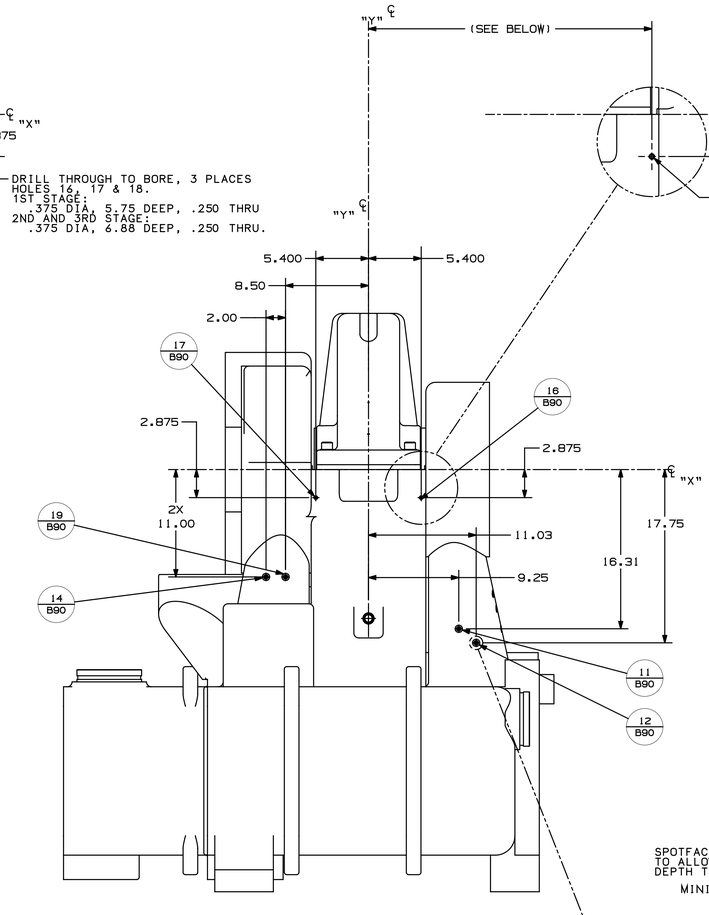

POSITON B90

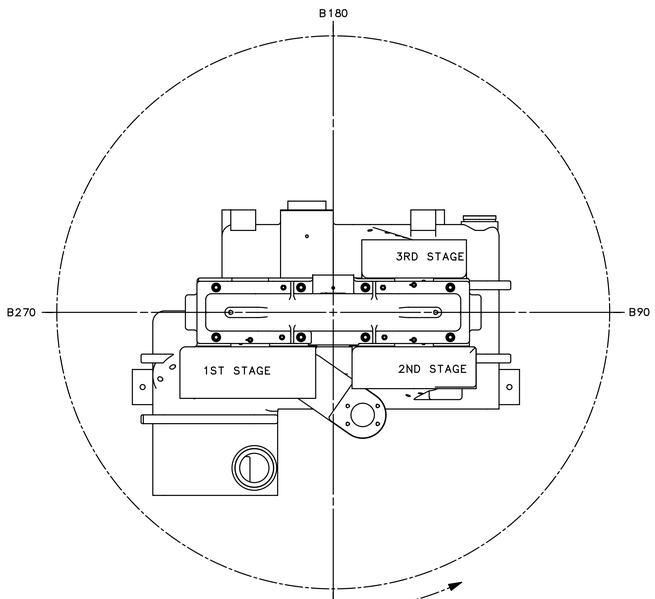

(WITH TOOLING STATIONARY AND GEARBOX AT ZERO DEGREES)

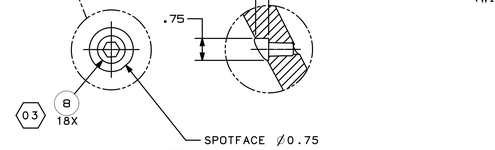

DETAIL "J"

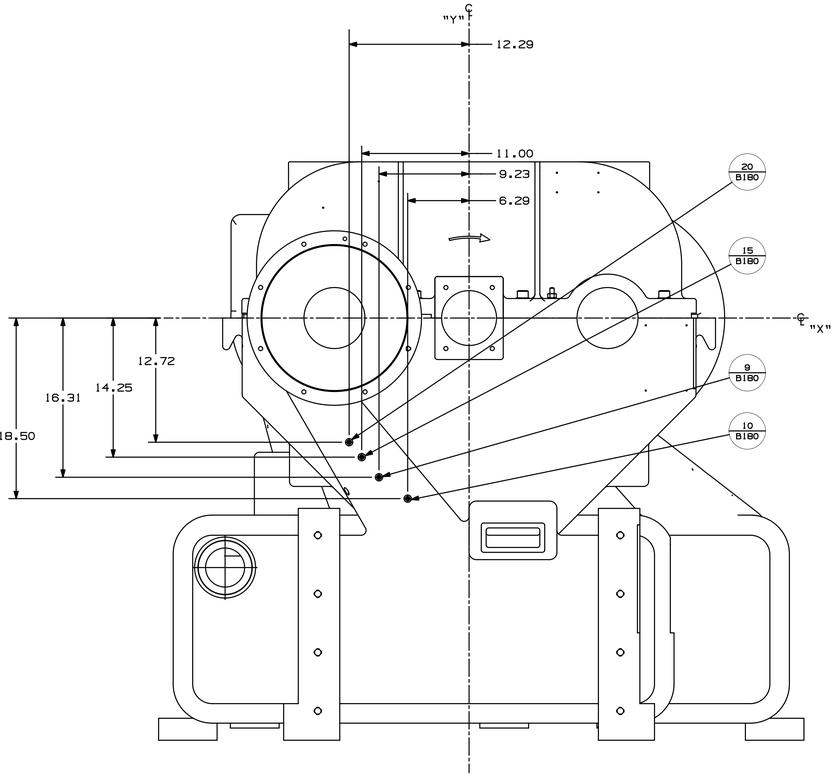

POSITION B180

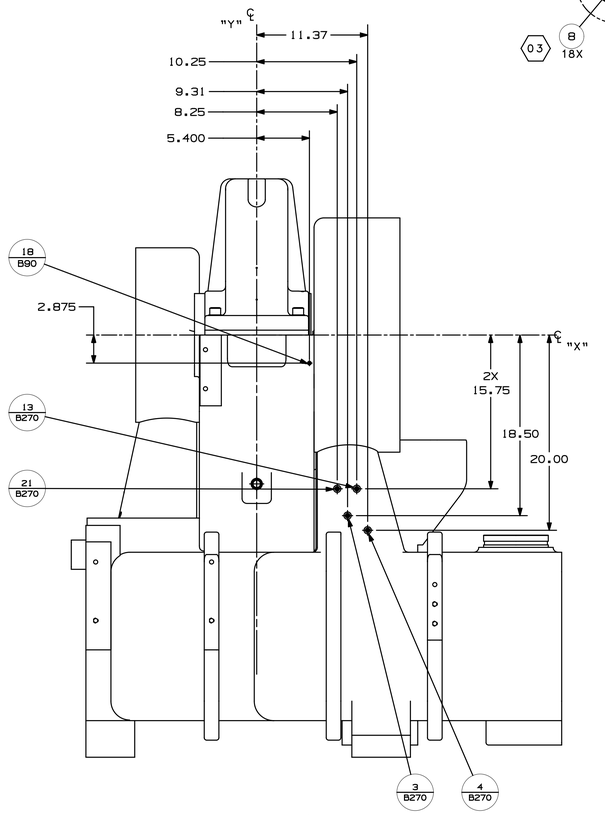

POSITION B270

NOTES:

1. DRILLING DEVICE IS ALWAYS ASSUMED STATIONARY IN THE ZERO DEGREE POSITION ("B0").
2. HOLES ARE DIMENSIONED BASED ON THE GEARBOX BEING POSITIONED AT THE ROTATION ANGLE "BXXX" GIVEN FOR EACH HOLES.

   EXAMPLE:

   4 B270 — HOLE NUMBER; ROTATION OF GEARBOX IN RELATION TO TOOLING
3. AFTER ROTATION TO "BXXX" ANGLE, INCREMENT "X" & "Y" DIMENSION TO DRILL/TAP HOLE.
4. CLEAN AND REMOVE ALL OIL,BURRS & CHIPS.

"THIS DRAWING AND THE CONFIDENTIAL TRADE SECRET INFORMATION ON IT ARE THE PROPERTY OF CAMERON. POSSESSION DOES NOT GIVE ANY RIGHT TO DISCLOSE, REPRODUCE OR USE SAME FOR ANY PURPOSE OTHER THAN THAT GRANTED BY EXPRESS WRITTEN PERMISSION OF CAMERON. THIS DRAWING IS TO BE RETURNED TO CAMERON UPON ITS REQUEST OR COMPLETION OF AUTHORIZED USE."

1 PLACE DECIMAL X.X ±0.06
2 PLACE DECIMAL X.XX ±0.02
3 PLACE DECIMAL X.XXX ±0.010
FRACTIONAL CALLOUT X.XX ±0.020
FINISH: 63 ⌀ OR BETTER
BREAK CORNERS: .02 X 45° MAX.
REMOVE ALL BURRS

THIRD ANGLE PROJECTION

DRAFTER: E. ZAGMESTER	DATE 2013/10/29	CAMERON — COMPRESSION SYSTEMS
CHECKER: E. ZAGMESTER	DATE 2013/10/29	GEARBOX_MACHINED_TA3000(60HZ)
ENGINEER: S. CASE	DATE 2013/10/29	(1ST STG. REDUCED SCROLL)
APPROVAL: T. WAZIERSKI	DATE 2013/10/29	E — NX DRAWING — DWG. NO. AAP379380 9-00360DG
DRAWING PER ASME Y14.5-1994		SCALE 1:6 — SHEET 3 OF 4
DIMENSIONS IN INCHES UNLESS OTHERWISE SPECIFIED		1101 BROADWAY, P.O. BOX 207, BUFFALO, NEW YORK 14225-0207, U.S.A.

DWG NO AAP379380 9-00360DG REV 3

REVISION HISTORY					
ZONE	REV.	ECO NO.	DESCRIPTION	DATE	APPROVED
------	01	4573269	REDRAWN IN NX & SYNC WITH SAP	2013/10/29	EJZ/SRC
------	02	4573345	THIS DRAWING SUPERSEDES AAP379380?-G3460/05 SHEET 4 OF 4 ONLY. SHEET UPDATED TO MATCH INSPECTION DRAWING	2013/11/04	EJZ/SRC
------	03	4753986	SEE SH 1 FOR CHANGES	2015/10/02	EJZ/SRC

DETAIL "F"
TYP. 2 PLACES

DRILL 7/16" DIA. X 2-3/4" DEEP
TAP 1/4" NPT TO FIT STD. PLUG GAGE

DRILL 23/32" DIA. X 2-3/4" DEEP
TAP 1/2" NPT TO FIT STD. PLUG GAGE
TYPICAL 2 PLACES

DRILL 21/32 DIA. X 2.12 DEEP
TAP 3/4-10UNC-2B X 1.75 DEEP
8 HOLES LOCATED AS SHOWN ON
PLAN VIEW, SHEET 1 OF 4

TYP. 7 PLACES
BETWEEN H.S. & L.S
PINIONS AS SHOWN

℄ L.S. PINION
℄ BULLGEAR
℄ H.S. PINION

1ST STG.
2ND STG.
3RD STG.

SEE DETAIL K
TYP. ALL STAGES

SEE DETAIL "U"
TYP. 7 PLACES

THRU BORE TO BE MACHINED
TO THIS THEORETICAL POINT
TO GUARANTEE CLEARANCE

DETAIL "U"
TYPICAL 7 PLACES

DETAIL "K"
TYP. 2 PLACES EACH STAGE

"THIS DRAWING AND THE CONFIDENTIAL TRADE SECRET INFORMATION ON IT ARE THE PROPERTY OF CAMERON. POSSESSION DOES NOT GIVE ANY RIGHT TO DISCLOSE, REPRODUCE OR USE SAME FOR ANY PURPOSE OTHER THAN THAT GRANTED BY EXPRESS WRITTEN PERMISSION OF CAMERON. THIS DRAWING IS TO BE RETURNED TO CAMERON UPON ITS REQUEST OR COMPLETION OF AUTHORIZED USE."

1 PLACE DECIMAL X.X ±0.06
2 PLACE DECIMAL X.XX ±0.02
3 PLACE DECIMAL X.XXX ±0.010
FRACTIONAL CALLOUT X/X ±0.020
FILLETS: 0.38~0.88
ANGLES: ±0° 30'
BREAK CORNERS: .02 X 45° MAX.
REMOVE ALL BURRS

THIRD ANGLE PROJECTION

DRAFTER: E. ZAGMESTER	DATE	2013/10/29
CHECKER: E. ZAGMESTER	DATE	2013/10/29
ENGINEER: S. CASE	DATE	2013/10/29
APPROVAL: T. MAZIERSKI	DATE	2013/10/29

DRAWING PER ASME Y14.5-1994
DIMENSIONS IN INCHES UNLESS OTHERWISE SPECIFIED

CAMERON — COMPRESSION SYSTEMS

GEARBOX_MACHINED_TA3000(60HZ)

(1ST STG, REDUCED SCROLL)

E — NX DRAWING — DWG. NO. AAP3793809-00360DG

SCALE 3:8 — 1521 BROADWAY, P.O. BOX 207, BUFFALO, NEW YORK 14225-0207, U.S.A. — SHEET 4 OF 4

AAP3793809-00360DG SH 4

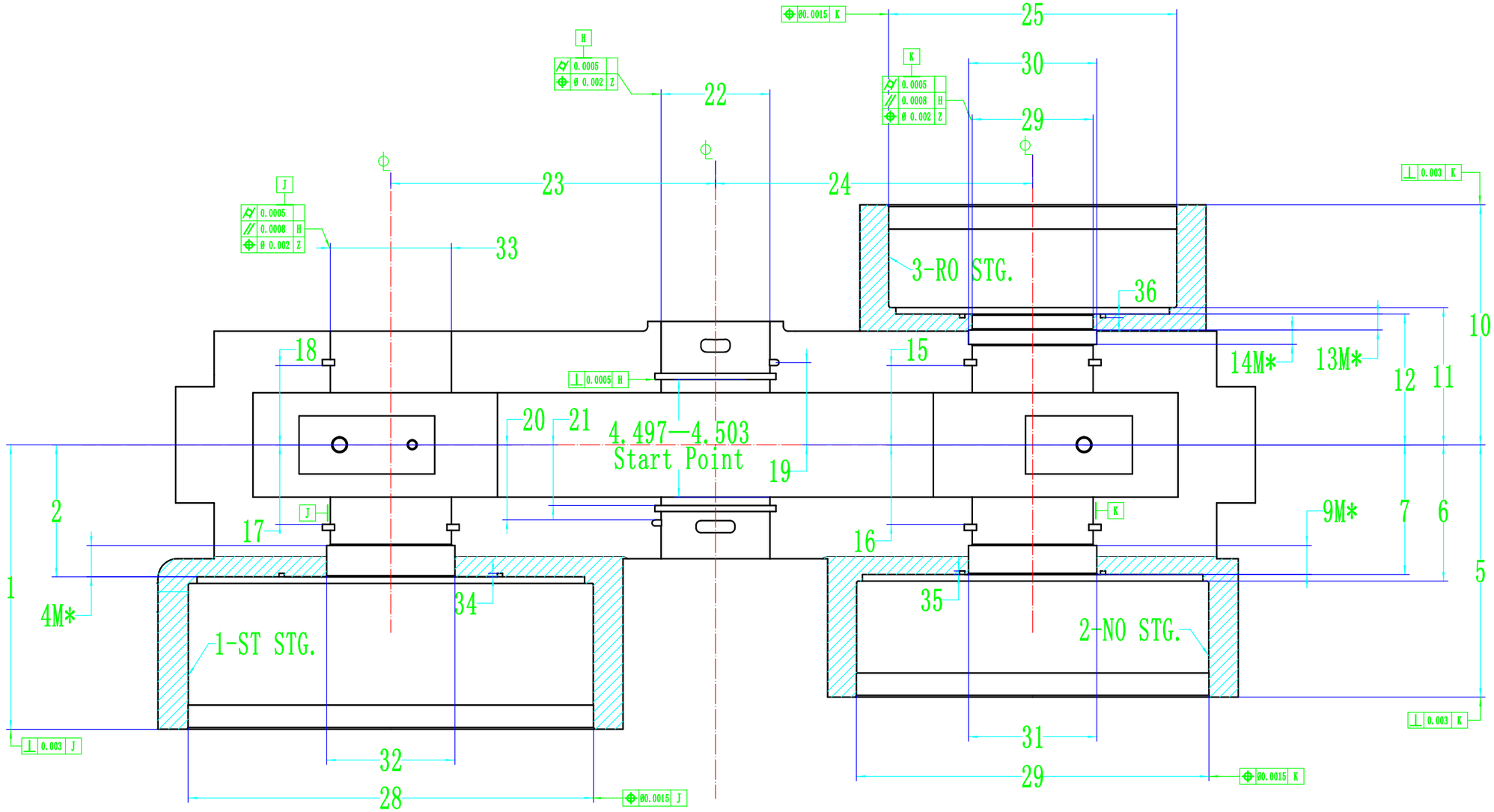

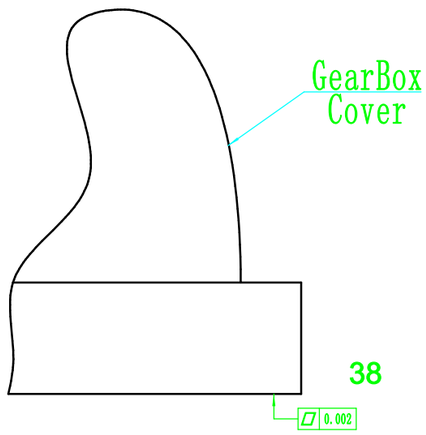

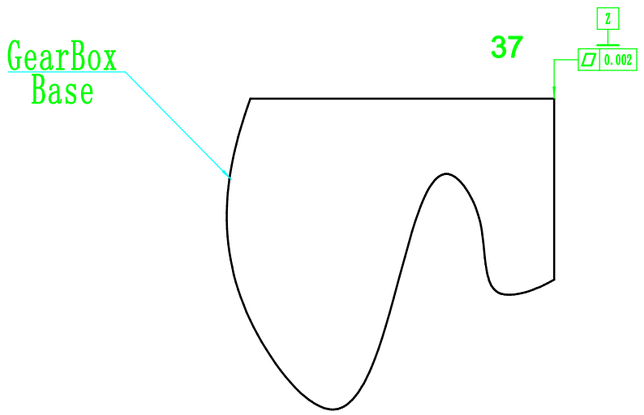

制图			TA3000系列蜗壳关键尺寸图	1:3
校核				
CAMERON			检验-5	

普什联动科技有限公司
PUSH LINKO TECHNOLOGY CO.,LTD.
ADD.5#HUANYANG,YUEJIANG YIBIN,SICHUAN,CHINA
ZIP:645152 TEL:(0831)5352019 FAX:(0831)5352002

TA3000 Gearbox Inspection Form – External (60Hz)

MACHINING：PUSH LINKO TECHNOLOGY CO .,LTD. 加工厂	CASTING SUPPLIER: 毛坯供应商 PUSH LINKO TECHNOLOGY CO .,LTD.
PART NUMBER: AAP3793809-00360DG 零件号	DRAWING REVISION:Rev 3 图纸版本号
P.O. NUMBER:30016280-60 订单号	CASTING SERIAL NUMBER: Base:PF23021512 Cover:23011122
S/N: 30016280-60-154	inspector: Ma Wei date: 20230424

1	Verify gearbox cover & base have been stamped with the same serial number. # 请确认所有的箱体和盖子上都打了相同的序列编号	OK	
2	Inner cooler cavity depth is 30.37 +/- 3/16” 内冷却器型腔深度30.38″	OK	
3	Tap depth of ½ - 13 intercooler mounting holes are 1 1/8" . 箱体中间冷却器安装孔 ½ - 13的螺纹深度为：1 1/8"深。	OK	
4	¼” NPT hole in cover for bullgear feedline is tapped straight and located at .496” from edge of groove to hole center. 箱盖进料管¼” NPT孔中心位于槽边缘.496”。	OK	
5	Φ .250” drain holes are in proper location on bearing bores on all three stages, (.29/.22”). Φ0.250的漏油孔在三个轴孔台阶的正确位置，到边的距离(.29/.22”)	OK	
6	½” NPT intercooler condensate holes thread depth, 3 places. Use plug gauge. 冷却器下方3个1/2 NPT螺纹孔通止规检测合格并用堵头堵住。	OK	
7	SAE Port fitting holes drilled and tapped to proper depth 2 places. (Visually) 箱体2处SAE port安装孔钻攻到了应有的深度。	OK	
8	¼” NPT holes in gearbox cavity tapped per print (under the center line). 齿轮箱内腔¼” NPT根据图纸孔钻到了应有深度.	OK	
9	½” NPT holes in gearbox cavity tapped per print, 2 places (under the center line). 2处齿轮箱内腔½” NPT孔根据图纸钻到了应有深度。	OK	
10	Entire box free of porosity. 整个产品没有气孔。	OK	
11	All 1/8” and 1/4” NPT instrumentation holes drilled per drawing, sheet 3 所有的1/8” and 1/4” NPT仪表孔都根据图纸第三页钻孔。	OK	
12	Verify the completion of “Operator Check List” Form. 检查Operator Check List” Form（操作者清单）是否完成	OK	
13	If unacceptable, contact Cameron buyer		

普什联动科技有限公司
PUSH LINKO TECHNOLOGY CO.,LTD.
ADD.5#HUANYANG,YUEJIANG YIBIN,SICHUAN,CHINA
ZIP:645152 TEL:(0831)5352019 FAX:(0831)5352002

	Item Number	Required (Inch)	Actual (Inch)	Result					
	Start Point	3.378/3.372	3.3750	OK					
	Start Point	0.0005	0.0004	OK					
	1	14.680/14.670	14.6709	OK					
	1	⊥ 0.003 J	0.0011	OK					
	2	7.153/7.143	7.1486	OK					
	3	6.809/6.804	6.8050	OK					
	4 M*	1.628/1.608	1.616	OK					
	5	13.025/13.015	13.0163	OK					
	5	⊥ 0.003 K	0.0024	OK					
	6	7.033/7.023	7.0313	OK					
	7	6.687/6.682	6.6838	OK					
	8	4.096/4.092	4.0928	OK					
	9 M*	1.507/1.487	1.496	OK					
	10	12.400/12.390	12.3925	OK					
	10	⊥ 0.003 K	0.0024	OK					
	11	7.098/7.088	7.0918	OK					
	12	6.754/6.749	6.7513	OK					
	13 M*	.824/.804	0.807	OK					
	14 M*	.765/.735	0.742	OK					
	15	4.096/4.092	4.0941	OK					
	16	4.096/4.092	4.0928	OK					
	17	4.096/4.092	4.0929	OK					
	18	4.096/4.092	4.0946	OK					
	19	4.104/4.084	4.0967	OK					
	20	3.882/3.862	3.8686	OK					
	21	3.124/3.118	3.1188	OK					
	22	5.625/5.624	5.625	OK					
	22	/O/ Φ 0.0005	0.0003	OK					
	22	⊕ Φ 0.0020 Z	0.0016	OK					

	23(60Hz)	14.184/14.181	14.1824	OK					
	24(60Hz)	13.795/13.792	13.7936	OK					
	25	14.876/14.874	14.8753	OK					
	25	⊕ Φ 0.0015	0.0014	OK					
	26	18.201/18.199	18.2008	OK					
	26	⊕ Φ 0.0015 K	0.0010	OK					
	27	4.096/4.092	4.0921	OK					
	28	20.923/20.921	20.9226	OK					
	28	⊕ Φ 0.0040 J	0.0017	OK					
	29	Φ 6.249 / Φ 6.250	6.25	OK					
	29	/O/ Φ 0.0005	0.0003	OK					
	29	// Φ 0.0008 H	0.0007	OK					
	29	⊕ Φ 0.0020 Z	0.0016	OK					
	30 M*	Φ 6.625 ±0.01	6.621	OK					
	31	Φ 6.623 / Φ 6.626	6.625	OK					
	32	Φ 6.623 / Φ 6.626	6.623	OK					
	33	Φ 6.249 / Φ 6.250	6.25	OK					
	33	/O/ Φ 0.0005	0.0005	OK					
	33	// Φ 0.0008 H	0.0004	OK					
	33	⊕ Φ 0.0020 Z	0.0006	OK					
	34	0.185/0.178	0.181	OK					
	35	0.185/0.178	0.185	OK					
	36	0.185/0.178	0.185	OK					
	37	◊ 0.0020	0.0012	OK					
	38	◊ 0.0020	0.0004	OK					

普什联动科技有限公司
PUSH LINKO TECHNOLOGY CO.,LTD.
ADD.5#HUANYANG,YUEJIANG YIBIN,SICHUAN,CHINA
ZIP:645152 TEL:(0831)5352019 FAX:(0831)5352002

Inspected By: Ma Wei Date: 20230424	Reviewed by: Lichun Gan Date:20230424
DRAWING REVISION:3793809-00360DG Rev 3 S/N: 30016280-60-154	
Product Name:GearBox ,Machined ,TA3000-60HZ GEARBOX	P/N:PF23021512 Material: AAA3409071-15243

No.	Location	Requirement			Actual Value	Result	Equipment
		UT	Nominal value	LT			
2	G6	4.21	4.19	4.17	4.202	OK	Vernier Caliper
3	H5	0.439	7/16	0.437	0.439	OK	Vernier Caliper
4	H6		1 / 4 NPT		1 / 4 NPT	OK	Thread Plug Gauge
5	D6	2.247	2.237	2.227	2.235	OK	Vernier Caliper
		3.135	3.125	3.115	3.117	OK	Vernier Caliper
6	E4	1.145	4* 1 1/8	1.105	1.110	OK	Vernier Caliper
7	E4	1.52	4* 1.50	1.48	1.504	OK	Depth Gague
8	E5	0.432	4* Φ 0.421	0.412	0.415	OK	Digital Caliper
9	E5		1 / 2 - 13 UNC		1 / 2 - 13 UNC	OK	Thread Plug Gauge
11	E5	0.020	⊕ 0.020	0.000	0.0080	OK	CMM
12	D4	3.124		3.118	3.1188	OK	CMM
13	D5	4.038		4.018	4.0296	OK	CMM
14	E4	0.0005	⊥ 0.0005 H	0.0000	0.0004	OK	CMM
15	E5	3.378		3.372	3.3750	OK	CMM
16	E5	4.260		4.240	4.2412	OK	CMM

Ingersoll Rand
338 Valley Rd
Mocksville, NC 27028

DOCUMENT 1B: MATERIAL SPECIFICATIONS: GEARING

Date:	02/08/2024
Customer:	Air Products
User:	Air Products
Compressor Model:	TA3000
Customer Order Number:	4505773730
Compressor Serial Number:	22590

TO WHOM IT MAY CONCERN:

Ingersoll Rand hereby certifies the bullgear conforms to applicable specifications: AGMA, AISI-AAIL-0951, AISI-4340E AQ and AMS2301 (shaft only).

- Bullgear (34CrNiMo6) and Shaft (4140E Steel): SN 413



Donald J Bauch
PAC Quality Engineer
Ingersoll Rand

Columbia Gear Corporation

A SUBSIDIARY OF INDUSTRIAL MANUFACTURING COMPANY

Certificate of Compliance

I, the undersigned, hereby confirm that the shipment described below meets all of the requirements according to specifications and that the said parts have been manufactured in accordance with the latest requirements. All pertaining records will be on file at Columbia Gear for your review.

Customer Name:	Ingersoll Rand		
Purchase Order Number:	30019282-145		
Part Number & Revision:	AAP3793815-03163A		
Part Description:	BULLGEAR ASSEMBLY - AGMA 12		
Quantity:	5	***Date:***	Aug 18, 2023
Serial Numbers:	Assm SO 266726 - SN 412-414, 417, 418		

Columbia Gear Corporation

Sara Peters
Signature

QA Administrative Assistant
Title

Columbia Gear Corporation

Assembly
AAP3793815-03163A
SO 266726
PO 30019282-145
SN 412-414, 417, 418

MAGNETIC PARTICLE PRODUCTION RECORD

Customer	Ingersoll Rand	Part Number	3793815-03163A
Description	Bull Gear Assembly	Drawing Number	AAP3793815-03163DG Rev. 1
Material	4340	Specification	IL-650
Procedure	QAWI 7.5.2-09	Acceptance Class	Zero Defects
Job Number	265997	Serial Numbers	412 – 419

Amperage: Head shot: N/A Stationary Coil: N/A Portable coil: 2,000

Equipment Make: Magnaflux Corp Model: H-720 SN: 72079

Machine Current (max): 6,000 Amps, DC, Full Wave Rectified

Coil / Solenoid Turns: 6

Particles: Wet Suspension

Concentrate: Fluorescent Powder MI Glow 800 Batch No. 21187

Suspension Vehicle: Base Oil HF Batch No. 22470

Reject number for non conforming material:

DEMAG Method: AC Coil or Degaussatron III | Residual Field After Demag: +/- 2 Gauss

Inspector: Randy Tamm QAWI 7.5.2-03 Level I	Accepted Qty: 8	Rejected Qty: 0
Trainer/Approver: *Eli Roth CG Metallurgist*		Date: 08/17/23



S/O 265997

S/N 413

Ingersoll Rand
338 Valley Rd
Mocksville, NC 27028

DOCUMENT 1C: MATERIAL SPECIFICATIONS: GEARING

Date:	02/08/2024
Customer:	Air Products
User:	Air Products
Compressor Model:	TA3000
Customer Order Number:	4505773730
Compressor Serial Number:	22590

TO WHOM IT MAY CONCERN:

Ingersoll Rand hereby certifies the pinions conform to applicable specifications: AGMA, AISI-4340E AQ and AMS2301.

- Low speed Pinion (4340E Steel): SN 265235-2444
- High speed Pinion (4340E Steel): SN 266460-2298

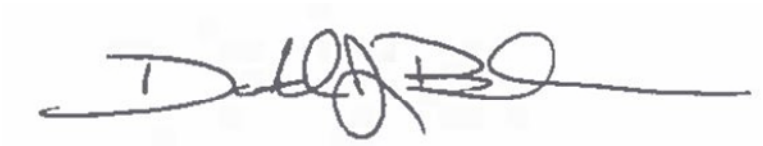

Donald J Bauch
PAC Quality Engineer
Ingersoll Rand

Columbia Gear Corporation

A SUBSIDIARY OF INDUSTRIAL MANUFACTURING COMPANY

Certificate of Compliance

I, the undersigned, hereby confirm that the shipment described below meets all of the requirements according to specifications and that the said parts have been manufactured in accordance with the latest requirements. All pertaining records will be on file at Columbia Gear for your review.

Customer Name:	Ingersoll Rand
Purchase Order Number:	30019282-139
Part Number & Revision:	AAP1793827-02003
Part Description:	PINION ASS'Y-AGMA 12
Quantity:	7 ***Date:*** May 31, 2023
Serial Numbers:	SO 265369 (Assm 265360) - SN 2441 thru 2447

Columbia Gear Corporation

Sara Peters
Signature

QA Administrative Assistant
Title

Columbia Gear Corporation

Assembly
AAP1793827-02003
SO 265369
PO 30019282-139
SN 2441 thru 2447

MAGNETIC PARTICLE PRODUCTION RECORD

Customer	Cameron Compression	Part Number	1793827-02003
Description	Pinion Assembly	Drawing Number	1793827-02003 Rev: 3
Material	4340	Specification	IL – 650
Procedure	QAWI 7.5.2-09	Acceptance Class	Zero Defects
Job Number	265369	Serial Numbers	2441 – 2447
Amperage:	Head shot: 1,500	Stationary Coil: 500	Portable coil: N/A

Equipment Make:	Magnaflux Corp	Model: H-720	SN: 72079
Machine Current (max):	6,000 Amps, DC, Full Wave Rectified		
Coil / Solenoid Turns:	5		
Particles:	Wet Suspension		
Concentrate:	Fluorescent Powder MI Glow 800	Batch No.	21187
Suspension Vehicle:	Base Oil HF	Batch No.	22274

Reject number for non conforming material:

DEMAG Method: AC Coil or Degaussatron III	Residual Field After Demag: +/- 2 Gauss

Inspector: Mike Koroll QAWI 7.5.2-03 Level II	Accepted Qty: 7	Rejected Qty: 0
Approved By: *Eli Roth CG Metallurgist*		Date: 5/19/2023

Cooper Compression

Columbia Gear Corporation

5/19/2023 7:31 AM

Peak Slow Roll

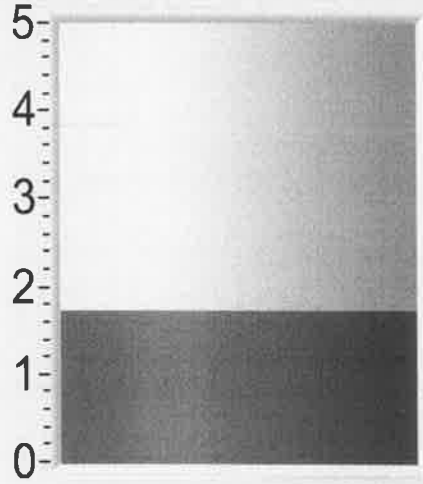

C.G. Shop Order No. 265235

Cooper PO No. 30019282-139

Part Number 1793827-02003

Revision 03

Serial Number 2444

Clock No. 02752

Print

Finished

Retest

About

1.729

mils

tenths

Combined Electrical / Mechanical Runout

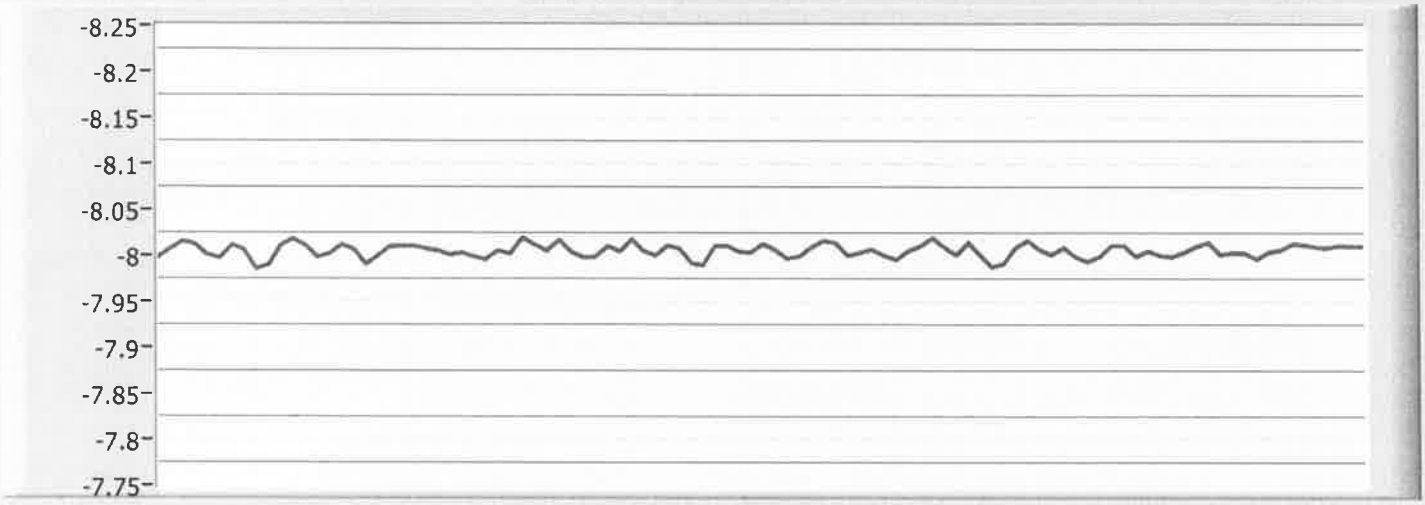

Actual DC Volts

Columbia Gear Corporation

A SUBSIDIARY OF INDUSTRIAL MANUFACTURING COMPANY

Certificate of Compliance

I, the undersigned, hereby confirm that the shipment described below meets all of the requirements according to specifications and that the said parts have been manufactured in accordance with the latest requirements. All pertaining records will be on file at Columbia Gear for your review.

Customer Name:	Ingersoll Rand		
Purchase Order Number:	30019282-142		
Part Number & Revision:	AAP1793827-02002		
Part Description:	PINION ASSY		
Quantity:	6	***Date:***	July 28, 2023
Serial Numbers:	Assm 266284 - SN 2293, 2295 thru 2298		

Columbia Gear Corporation

Sara Peters
Signature

QA Administrative Assistant
Title

Columbia Gear Corporation

Assembly
AAP1793827-02002
SO 266284
PO 30019282-142
SN 2293, 2295 thru 2299

MAGNETIC PARTICLE PRODUCTION RECORD

Customer	Cameron	Part Number	1793827-02002SF
Description	High Speed Pinion Ass	Drawing Number	1793827-02002 Rev: 02
Material	4340	Specification	ASTM E1444
Procedure	QAWI 7.5.2-09	Acceptance Class	Zero Defects
Job Number	265960	Serial Numbers	2293, 2295 – 2302, 2304 – 2319, 2321

Amperage: Head shot: 1,800 Stationary Coil: 1,500 Portable coil: N/A

Equipment Make:	Magnaflux Corp	Model: H-720	SN: 72079
Machine Current (max):	6,000 Amps, DC, Full Wave Rectified		
Coil / Solenoid Turns:	5		
Particles:	Wet Suspension		
Concentrate:	Fluorescent Powder MI Glow 800	Batch No.	21187
Suspension Vehicle:	Base Oil HF	Batch No.	22470

Reject number for non conforming material:

DEMAG Method: AC Coil or Degaussatron III	Residual Field After Demag: +/- 2 Gauss

Inspector: Mike Koroll QAWI 7.5.2-03 Level II	Accepted Qty: 26	Rejected Qty: 0
Approved By: *Eli Roth CG Metallurgist*		Date: 07/25/23

Cooper Compression

Columbia Gear Corporation

Peak Slow Roll

7/25/2023 7:03 AM

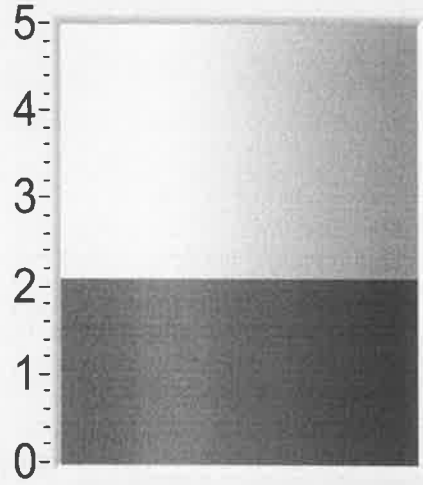

C.G. Shop Order No.: 265960

Cooper PO No.: 30019282-142

Part Number: 1793827-02002

Revision: 02

Serial Number: 2298 long

Clock No.: 02752

Print

Finished

Retest

About

2.083

mils

tenths

Combined Electrical / Mechanical Runout

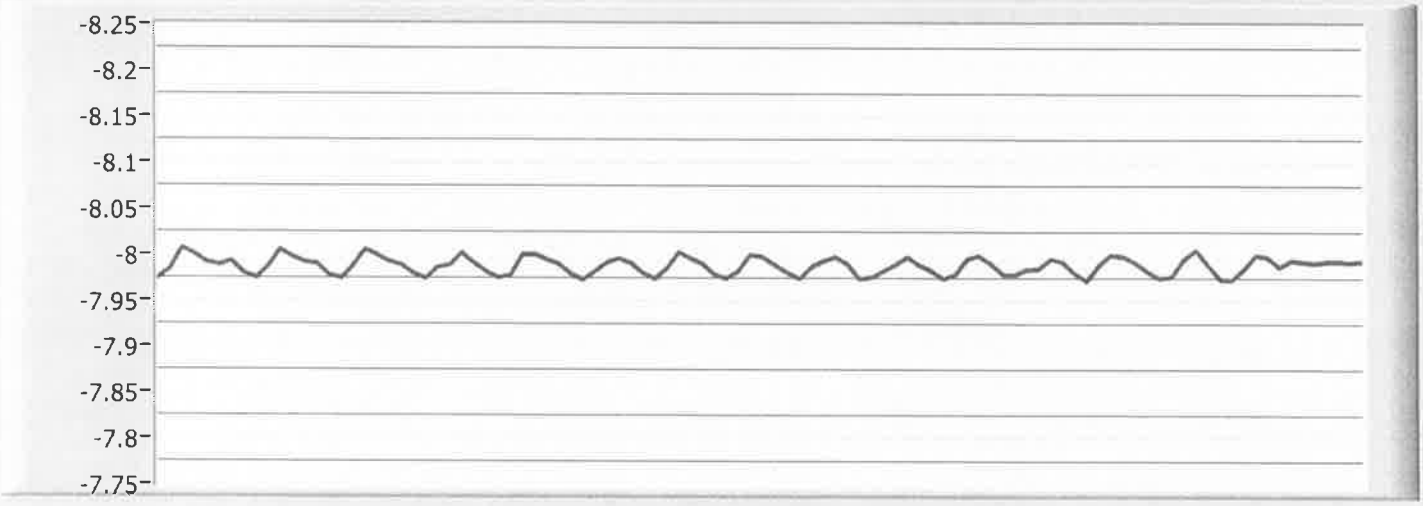

Actual DC Volts

Cooper Compression

Columbia Gear Corporation

7/25/2023 7:04 AM

Peak Slow Roll

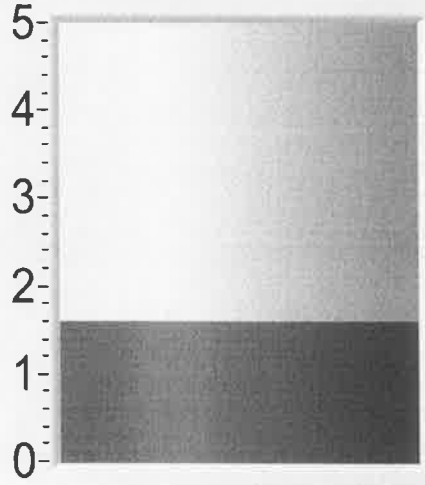

C.G. Shop Order No. 265960

Cooper PO No. 30019282-142

Part Number 1793827-02002

Revision 02

Serial Number 2298 short

Clock No. 02752

Print

Finished

Retest

About

1.609

mils

tenths

Combined Electrical / Mechanical Runout

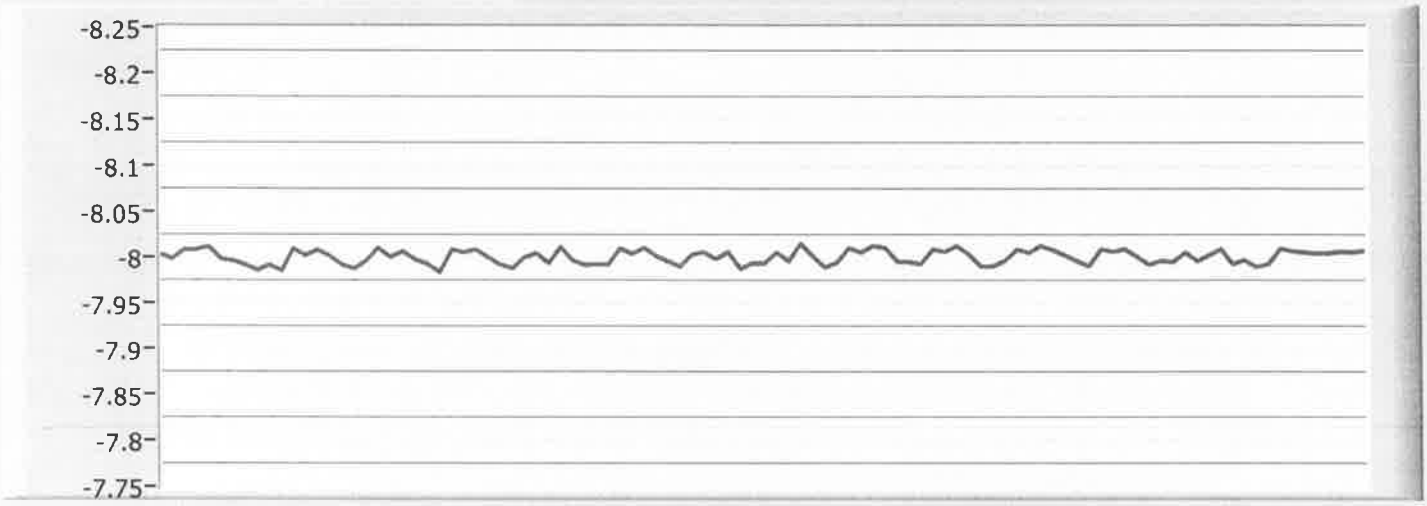

Actual DC Volts

Ingersoll Rand
338 Valley Rd
Mocksville, NC 27028

DOCUMENT 1D: MATERIAL SPECIFICATIONS: ROTOR ASSEMBLIES

Date:	02/08/2024
Customer:	Air Products
User:	Air Products
Compressor Model:	TA3000
Customer Order Number:	4505773730
Compressor Serial Number:	22590

TO WHOM IT MAY CONCERN:

Ingersoll Rand hereby certifies the balanced rotor assemblies conform to applicable specifications: AMS 5659M and ASTM A705.

- Low speed rotor assembly: 30035293
- High speed rotor assembly: 30044683



Donald J Bauch
PAC Quality Engineer
Ingersoll Rand

Ingersoll Rand Industrial Technologies	Title: TA 3000 Balance Data (QAF127)	Department: Centac Machining	Document No.: CF-318	Reviewed By: Brian Parrish
	Originated By: Brian Parrish	Date: 1/08/2019	Page 1 of 2	Date Reviewed: 12/3/2020
Safety	Verify (In Process Check)	Normal Work	Critical To Quality (CTQ)	

Ingersoll Rand.

ASSEMBLY – BALANCE SHEET

SALES ORDER NO: TA 2 2 5 9 0

SERVICE ORDER NO:

PROJECT SERIAL NO:

STG 1 PRODUCTION ORDER NO: 3 0 0 3 5 2 9 3

STG

TA 3000 Balance Data Form Date Started: 7-10-23

Outer Bearing S/N's: 1st 7961 2nd 3rd 4th 7890

Part	Balance Tol. MFG-023	RPM	A	B	C	Initial Unbalance Left (Circle Units)	Initial Unbalance Right (Circle Units)	Final Unbalance Left	Final Unbalance Right
L/S Pinion Serial #: 265235-2444	42	2,200	2	6.3	7.15	152.444	156.524	21.537	20.741
Operator Initials: DW	mg-in	rpm	in	in	in	(mg-in) / g-in	mg-in / g-in	mg-in	mg-in
H/S Pinion Serial #:	25	2,500							
Operator Initials:	mg-in	rpm	in	in	in	mg-in / g-in	mg-in / g-in	mg-in	mg-in

Rotor Part #: LS AAA3793835-82590 **HS**

ARBOR BALANCE

STAGE	Initial Unbalance Left (Circle Units)	Initial Unbalance Right (Circle Units)	Final Unbalance Left	Final Unbalance Right	RPM	Balance Tolerance MFG-023	
1st Stage Arbor	BIASED				1,800	Arbor Runout = 0.0002"	
						Actual Runout = .0004	
1st Stage Impeller Heat # 64331-LV Serial #: D300379919-1	211.574	114161.680	6.310	27.155	1,800	2 Plane	
						Left: 70	Right: 70
Operator Initials: DW	(mg-in) / g-in	(mg-in) / g-in	mg-in	mg-in	rpm	mg-in	mg-in
2nd Stage Arbor	BIASED				2,000	Arbor Runout = 0.0002"	
						Actual Runout =	
2nd Stage Impeller Heat #: Serial #:					2,000	Left (2 Plane): 25	Right (2 Plane): 25
Operator Initials:	mg-in / g-in	mg-in / g-in	mg-in	mg-in	rpm	mg-in	mg-in
3rd Stage Arbor	BIASED				2,500	Arbor Runout = 0.0002"	
						Actual Runout =	
3rd Stage Impeller Heat #: Serial #:					2,500	Left (2 Plane): 15	Right (2 Plane): 15
Operator Initials:	mg-in / g-in	mg-in / g-in	mg-in	mg-in	rpm	mg-in	mg-in

Revision:	Description:	Approved By:	Date:
2	Added line for Serial Number information	Clint Mittelsteadt	12/3/2020

DYNAMIC BALANCING TEST CERTIFICATE

BalanceMaster EasyBalance 2.2, Date: 2023-07-11, Time: 02:51
Machine name: AHC 13.1

Ingersoll Rand
501 Sanford Ave

Phone: Mocksville, NC 27028 Fax: 336-751-3561

TA3000 STG.1 IMPELLER

No Key compensation

No Tooling Compensation

Balancing Quality Standard:
User-defined

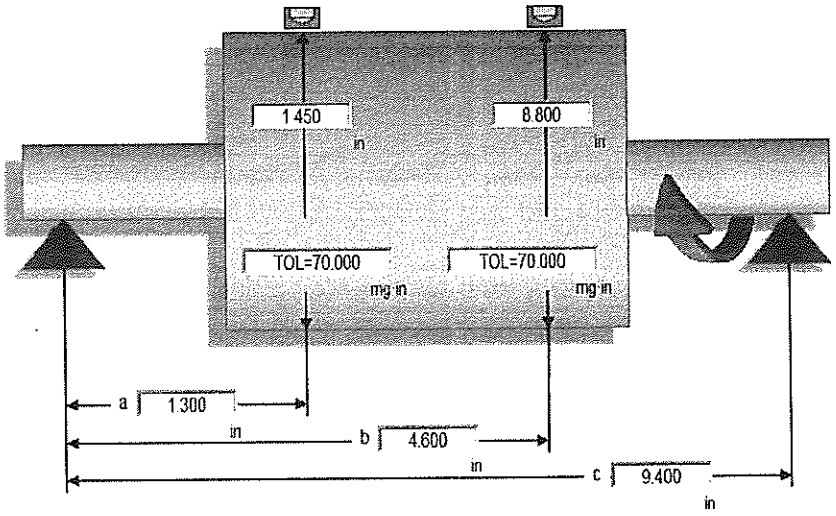

INITIAL RESULT:	Reject (1.56 x Tol)		Reject (4.82 x Tol)	
1857 RPM	Left		Right	
Correction mass:	-	150.822 mg at 155°	-	76.691 mg at 321°
Unbalance:		109.346 mg·in		337.439 mg·in

CURRENT RESULT:	OK (0.09 x Tol)		OK (0.39 x Tol)	
1850 RPM	Left		Right	
Correction mass:	-	8.703 mg at 265°	-	6.172 mg at 286°
Unbalance:		6.310 mg·in		27.155 mg·in

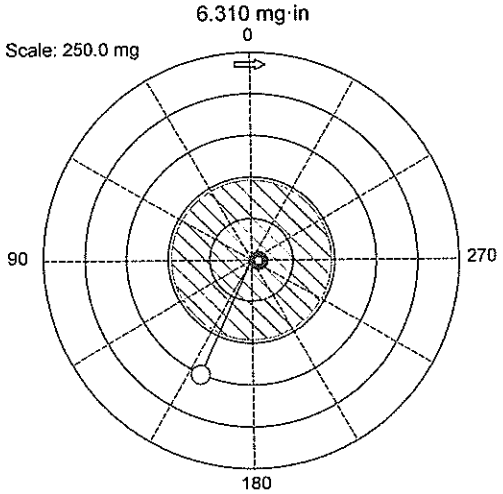

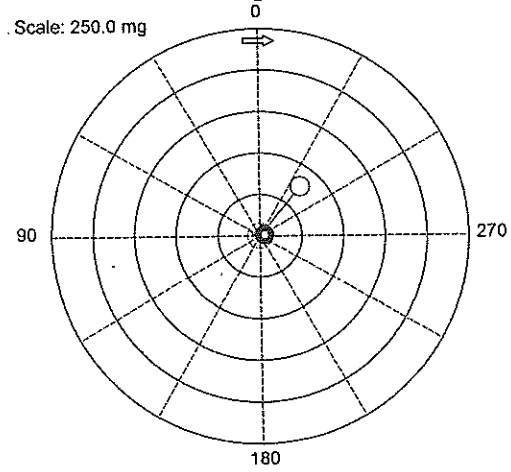

Operator (K Myers) Verified By Approved By

Test Certificate

Software version: 11.24.1.42 STANDARD

DYNAMIC BALANCING TEST CERTIFICATE

BalanceMaster EasyBalance 2.2, Date: 2023-07-10, Time: 06:22
Machine name: AHC 13.1

Ingersoll Rand
501 Sanford Ave

Phone: Mocksville, NC 27028 Fax: 336-751-3561

TA3000 STG.1 PINION

No Key compensation

No Tooling Compensation

Balancing Quality Standard:
User-defined

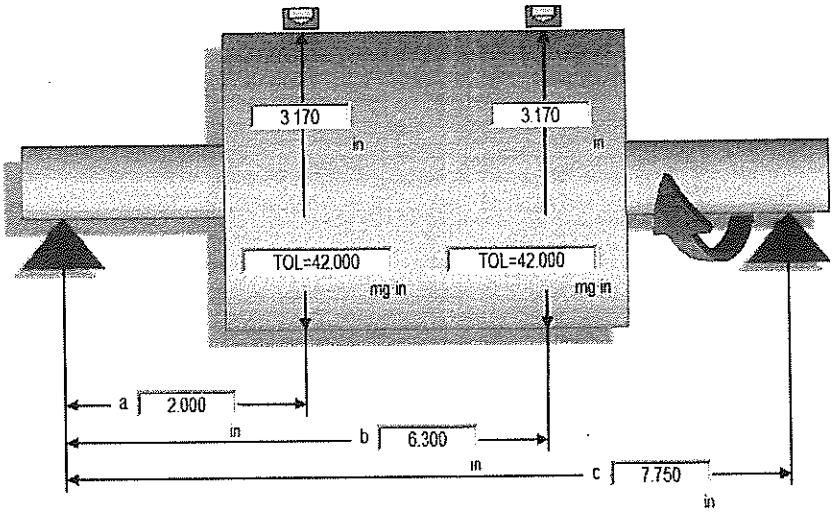

INITIAL RESULT:	Reject (3.63 x Tol)	Reject (3.73 x Tol)
2228 RPM	Left	Right
Correction mass:	- 96.179 mg at 151°	- 98.753 mg at 268°
Unbalance:	152.444 mg·in	156.524 mg·in

CURRENT RESULT:	OK (0.51 x Tol)	OK (0.49 x Tol)
2226 RPM	Left	Right
Correction mass:	- 13.588 mg at 354°	- 13.086 mg at 160°
Unbalance:	21.537 mg·in	20.741 mg·in

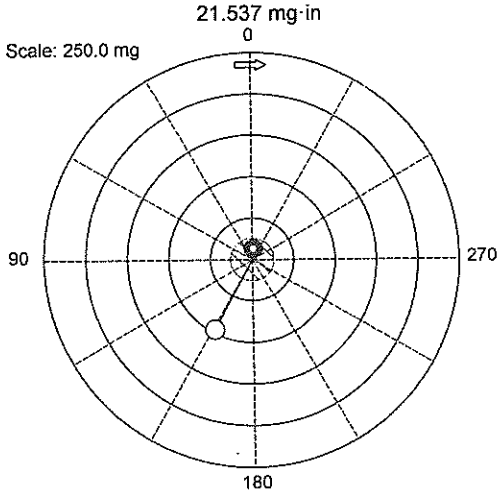

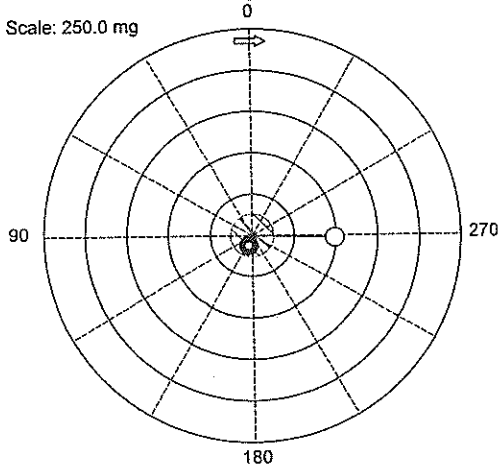

Operator (K Myers) Verified By Approved By

Test Certificate

Software version: 11.24.1.42 STANDARD

Ingersoll Rand Industrial Technologies	Title: TA, MSG, NX Impeller Run out Inspection Form	Department: Centac Machining	Document No.: CF-320	Reviewed By: Neil McCarthy
	Originated By: Brian Parrish	Date: 1/08/2019	Page 1 of 2	Date Reviewed: 11/4/2021
Safety	Verify (In Process Check)	☐ Normal Work	Critical To Quality (CTQ)	

TA, MSG, NX Impeller Runout Sheet

Allowable Deviations: Shaft; Mechanical .0003", Electrical: .00025" (New & Repair)

CONTRACT: TA22591 DATE: 7-10-23

1 Stage Pinion:
S/N: 266235-2444
PO #: 3001928Z-139
Part #: 1793827-02003

1 Stage Shaft: .0004
1 Stage Electrical R/O: .115 mills
Operator's Clock #: DW

____ Stage & ____ Stage Pinion
S/N: _____
PO #: _____
Part #: _____

____ Stage Shaft: _____
____ Stage Electrical: _____

____ Stage Shaft: _____
____ Stage Electrical: _____
Operator's Clock #: _____

Allowable Deviations for Impeller is .003" Mechanical:

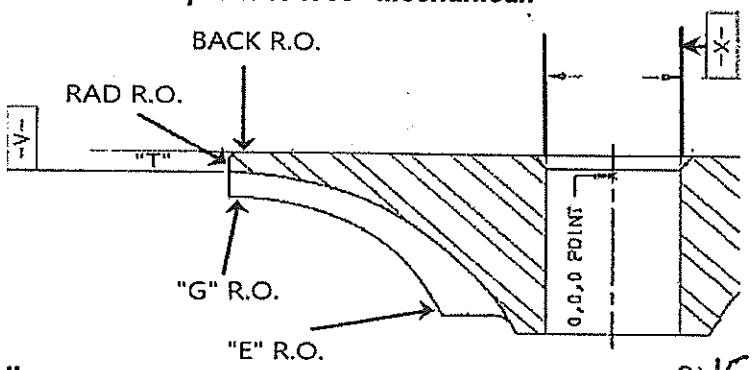

1st Stage Impeller:
S/N: D3600379191
Part #: AAP179384Z-20590
Operator's Clock #: DW

Back: .0015
Rad: .0008
"G": .0028
"E": .0026

2nd Stage Impeller:
S/N: _____
Part #: _____
Operator's Clock #: _____

Back: _____
Rad: _____
"G": _____
"E": _____

3rd Stage Impeller:
S/N: _____
Part #: _____
Operator's Clock #: _____

Back: _____
Rad: _____
"G": _____
"E": _____

Revision:	Description:	Approved By:	Date:
4	Added Graph	Javier Cruz	11/4/2021

Ingersoll Rand Industrial Technologies	Title: TA 3000 Balance Data (QAF127)	Department: Centac Machining	Document No.: CF-318	Reviewed By: Brian Parrish
	Originated By: Brian Parrish	Date: 1/08/2019	Page 1 of 2	Date Reviewed: 12/3/2020
Safety	Verify (In Process Check)	Normal Work	Critical To Quality (CTQ)	

Ingersoll Rand.

ASSEMBLY – BALANCE SHEET

* 1 4 0 0 2 *

SALES ORDER NO. TA22590

SERVICE ORDER NO.

PROJECT SERIAL NO.

PRODUCTION ORDER NO.

STG___

STG 2/3 30044683

TA 3000 Balance Data Form

Date Started: 8/8/23

Outer Bearing S/N's: 1st ____ 2nd 8884 3rd 9220 4th ____

Part	Balance Tol. MFG-023	RPM	A	B	C	Initial Unbalance Left (Circle Units)	Initial Unbalance Right (Circle Units)	Final Unbalance Left	Final Unbalance Right
L/S Pinion Serial #: ____	42	2,200							
Operator Initials: ____	mg-in	rpm	in	in	in	mg-in / g-in	mg-in / g-in	mg-in	mg-in
H/S Pinion Serial #: 266960-2298	25	2,500	2	4.3	2	98.449	13.734	1.633	6.973
Operator Initials: DW	mg-in	rpm	in	in	in	mg-in / g-in	mg-in / g-in	mg-in	mg-in

Rotor Part #: LS ____ **HS** AAA3793835-32590

ARBOR BALANCE

STAGE	Initial Unbalance Left (Circle Units)	Initial Unbalance Right (Circle Units)	Final Unbalance Left	Final Unbalance Right	RPM	Balance Tolerance MFG-023	
1st Stage Arbor	BIASED				1,800	Arbor Runout = 0.0002"	
						Actual Runout =	
1st Stage Impeller Heat #____ Serial #: ____					1,800	2 Plane Left 70	Right 70
Operator Initials: ____	mg-in / g-in	mg-in / g-in	mg-in	mg-in	rpm	mg-in	mg-in
2nd Stage Arbor	BIASED				2,000	Arbor Runout = 0.0002"	
						Actual Runout = .0001	
2nd Stage Impeller Heat # 64398-6V Serial #: 030010487-1	.389	1.054	4.926	5.020	2,000	Left (2 Plane) 25	Right (2 Plane) 25
Operator Initials: DW	mg-in / g-in	mg-in / g-in	mg-in	mg-in	rpm	mg-in	mg-in
3rd Stage Arbor	BIASED				2,500	Arbor Runout = 0.0002"	
						Actual Runout = .0002	
3rd Stage Impeller Heat # G-8516K02 Serial #: 030039695-2	153.22	327.94	4.725	4.286	2,500	Left (2 Plane) 15	Right (2 Plane) 15
Operator Initials: DW	mg-in / g-in	mg-in / g-in	mg-in	mg-in	rpm	mg-in	mg-in

Revision:	Description:	Approved By:	Date:
2	Added line for Serial Number information	Clint Mittelsteadt	12/3/2020

Ingersoll Rand

SCHENCK

Balanced by

Schenck USA Corp.

HM10BK, s/n AHC1300 - CAB920, s/n RVXM2104

Balancing report

User	DW
Order number	30044683
Rotor ID	TA22591

Type data

Rotor type	TA3000 STG.2 3 PINION
Last change	3/8/2023 2:46 PM
Set speed	2500 rpm

ABC geometry

Position of correction planes



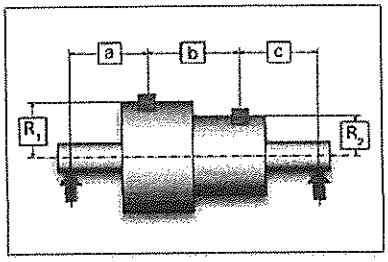

Distance a	2.000 inch
Distance b	4.300 inch
Distance c	2.000 inch
Radius 1	1.000 inch
Radius 2	1.000 inch

Tolerance

Tolerance	User defined
Selected planes	Correction planes
Dynamic Tolerance of Unbalance	
Correction Plane 1	25.000 mg·in
Correction Plane 2	25.000 mg·in

Measuring Results, Run: 1

8/8/2023

Measuring speed	2518 rpm		
Unbalance			
Correction Plane 1	98.449 mg·inch	176 °	3.9 * Tol
Correction Plane 2	13.734 mg·inch	219 °	in Tol
Correction			
Correction Plane 1 - Mass (Remove)	98.449 mg	176 °	3.9 * Tol
Correction Plane 2 - Mass (Remove)	13.734 mg	219 °	in Tol

Measuring Results, Run: 9

8/8/2023

Measuring speed	2522 rpm		
Unbalance			
Correction Plane 1	1.633 mg·inch	352 °	in Tol
Correction Plane 2	6.973 mg·inch	173 °	in Tol
Correction			
Correction Plane 1 - Mass (Remove)	1.633 mg	352 °	in Tol
Correction Plane 2 - Mass (Remove)	6.973 mg	173 °	in Tol

Ingersoll Rand

SCHENCK

Balanced by

Schenck USA Corp.

HM10BK, s/n AHC1300 - CAB920, s/n RVXM2104

Balancing report

User	DW
Order number	30044683
Rotor ID	TA22591

Type data

Rotor type	TA3000 STG.3 IMPELLER*
Last change	8/8/2023 11:06 AM
Set speed	2500 rpm

ABC geometry

Position of correction planes	
Distance a	1.200 inch
Distance b	1.700 inch
Distance c	3.650 inch
Radius 1	1.000 inch
Radius 2	1.000 inch

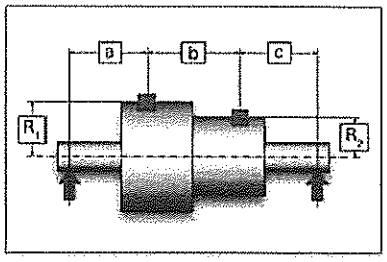

Tolerance

Tolerance	User defined
Selected planes	Correction planes

Dynamic Tolerance of Unbalance

Correction Plane 1	15.000 mg·in
Correction Plane 2	15.000 mg·in

Measuring Results, Run: 3

8/8/2023

Active compensations	Bias		
Measuring speed	2511 rpm		
Unbalance			
Correction Plane 1	153.229 mg·inch	255 °	10.2 * Tol
Correction Plane 2	327.940 mg·inch	272 °	21.9 * Tol
Correction			
Correction Plane 1 - Mass (Remove)	153.229 mg	255 °	10.2 * Tol
Correction Plane 2 - Mass (Remove)	327.940 mg	272 °	21.9 * Tol

Measuring Results, Run: 25

8/8/2023

Active compensations	Bias		
Measuring speed	2513 rpm		
Unbalance			
Correction Plane 1	4.725 mg·inch	191 °	in Tol
Correction Plane 2	4.286 mg·inch	104 °	in Tol
Correction			
Correction Plane 1 - Mass (Remove)	4.725 mg	191 °	in Tol
Correction Plane 2 - Mass (Remove)	4.286 mg	104 °	in Tol

Ingersoll Rand

SCHENCK

Balanced by

Schenck USA Corp.

HM10BK, s/n AHC1300 - CAB920, s/n RVXM2104

Balancing report

User	DW
Order number	30044683
Rotor ID	TA22591

Type data

Rotor type	TA3000 STG.2 IMPELLER*
Last change	8/9/2023 8:10 AM
Set speed	2000 rpm

ABC geometry

Position of correction planes



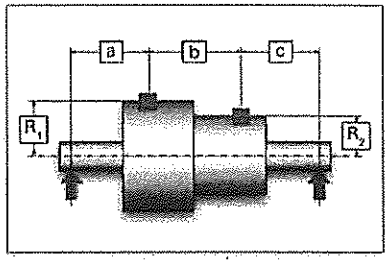

Distance a	1.200 inch
Distance b	2.100 inch
Distance c	3.850 inch
Radius 1	1.000 inch
Radius 2	1.000 inch

Tolerance

Tolerance	User defined
Selected planes	Correction planes

Dynamic Tolerance of Unbalance

Correction Plane 1	25.000 mg·in
Correction Plane 2	25.000 mg·in

Measuring Results, Run: 3

8/9/2023

Active compensations	Bias		
Measuring speed	2035 rpm		

Unbalance

Correction Plane 1	229.883 mg·inch	260 °	9.2 * Tol
Correction Plane 2	128.472 mg·inch	292 °	5.1 * Tol

Correction

Correction Plane 1 - Mass (Remove)	229.883 mg	260 °	9.2 * Tol
Correction Plane 2 - Mass (Remove)	128.472 mg	292 °	5.1 * Tol

Measuring Results, Run: 18

8/9/2023

Active compensations	Bias		
Measuring speed	2035 rpm		

Unbalance

Correction Plane 1	4.926 mg·inch	34 °	in Tol
Correction Plane 2	5.020 mg·inch	201 °	in Tol

Correction

Correction Plane 1 - Mass (Remove)	4.926 mg	34 °	in Tol
Correction Plane 2 - Mass (Remove)	5.020 mg	201 °	in Tol

Ingersoll Rand Industrial Technologies	Title: TA, MSG, NX Impeller Run out Inspection Form	Department: Centac Machining	Document No.: CF-320	Reviewed By: Neil McCarthy
	Originated By: Brian Parrish	Date: 1/08/2019	Page 1 of 2	Date Reviewed: 11/4/2021
Safety	Verify (In Process Check)	Normal Work	Critical To Quality (CTQ)	

TA, MSG, NX Impeller Runout Sheet

Allowable Deviations: Shaft; Mechanical .0003", Electrical: .00025" (New & Repair)

CONTRACT: TA22591 DATE: 8/18/23

____ ***Stage Pinion:***
S/N:
PO #:
Part #:

____ Stage Shaft:
____ Stage Electrical R/O:
Operator's Clock #:

2 ***Stage &*** 3 ***Stage Pinion***
S/N: 265960-2748
PO #: 3001928Z-14
Part #: 1793827-02002

2 Stage Shaft: .0001
2 Stage Electrical: .134 MILS
3 Stage Shaft: .0002
3 Stage Electrical: .085 MILS
Operator's Clock #: DW

Allowable Deviations for Impeller is .003" Mechanical:

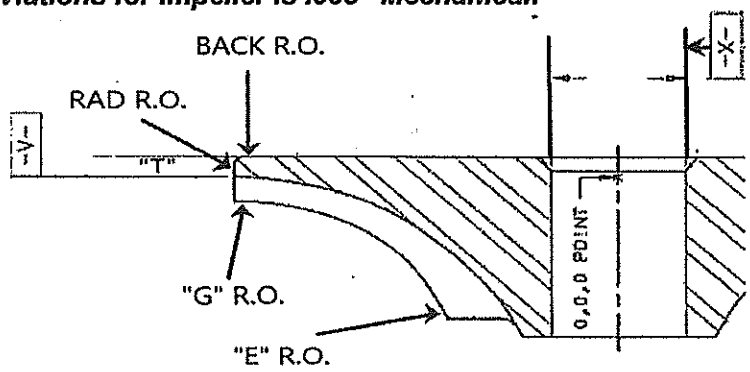

1st Stage Impeller:
S/N:
Part #:
Operator's Clock #:

Back:
Rad:
"G":
"E":

2nd Stage Impeller:
S/N: 030040487-1
Part #: AAP1793841-20540
Operator's Clock #: DW

Back: .0008
Rad: .0006
"G": .0013
"E": .0009

3rd Stage Impeller:
S/N: D30039695-2
Part #: AAP1793840-19124
Operator's Clock #: DW

Back: .0011
Rad: .0007
"G": .0021
"E": .0015

Revision:	Description:	Approved By:	Date:
4	Added Graph	Javier Cruz	11/4/2021

Ingersoll Rand
338 Valley Rd
Mocksville, NC 27028

DOCUMENT 2A: MATERIAL CERTIFICATIONS: CASTING

Date:	02/08/2024
Customer:	Air Products
User:	Air Products
Compressor Model:	TA3000
Customer Order Number:	4505773730
Compressor Serial Number:	22590

TO WHOM IT MAY CONCERN:

Ingersoll Rand hereby certifies the gearbox conforms to applicable specifications: Spec AAIL-648, ASTM A536 (cover only).

- Gearbox: Cover 23011122; 80-55-6 Ductile Iron
- Gearbox: Base 23021512; 80-55-6 Ductile Iron



Donald J Bauch
PAC Quality Engineer
Ingersoll Rand

普什联动科技有限公司
PUSH LINKO TECHNOLOGY CO.,LTD.
ADD.5#HUANYANG,YUEJIANG YIBIN,SICHUAN,CHINA
ZIP:645152 TEL:(0831)5352019 FAX:(0831)5352002

CERTIFICATE OF QUALITY

产品质量证明书

CC Part Number	AAA3409071-15243
Part Description	TA3000 60 HZ GEARBOX MACHINED
Purchase Order #	30016280-60
Serial Number	Base- PF23021512 Cover- 23011122
Client Name 客户名称	Ingersoll-Rand Company
Inspector 检验员	Wei Yong/Gan Lichun 魏勇　甘利春
Auditor 审核员	Zhang Hao/Ma Wei 张浩/马委
Date of Report 日期	2023.04.24

普什联动科技有限公司
PUSH LINKO TECHNOLOGY CO.,LTD.
ADD.5#HUANYANG,YUEJIANG YIBIN,SICHUAN,CHINA
ZIP:645152 TEL:(0831)5352019 FAX:(0831)5352002

定单号 PO:30016280

顾客名称 Customer Name Ingersoll-Rand Company	零件名称 Part Name: ☒ TA3000(60) gear box	DRAWING NO图号 Rev.版本号 ☒AAR1793803-03360 Rev.01
材料规范 Material spec. 80-55-6	**Report Reason 报告原因:** ☐**Sample 样件** ☒**Pilot Run 小批量** ☐**Batch Run 大批量**	
中央实验主管签字 Signature of the Central Lab Mgr. 何秀芬	质量保证主管签字 Signature of the Central Lab Mgr. 李露升	日期 Date 2023.2-28

炉号 Heat No.: 4-23-071 铸件序号 Castings serial No.：PF23021512

I 化学成份 Chemistry Composition :

	C%	Si%	Mn%	P%	S%	Cu%	Mg%	Ti%
实测值 Actual	3.63	2.36	0.26	0.030	0.013	0.61	0.040	0.015

II 物理性能 Physical Prorperties :

No.	Description	规定值 Specification	实测值 Actual			Note
1	Tensile Strength, Ultimate (Mpa)	≥552	692			Separated Test Block of Casting:Y 75
2	Tensile Strength, Yield(Mpa)	≥379	393			Separated Test Block of Casting:Y 75
3	Elongation at Break(%)	≥6	6.0			Separated Test Block of Casting:Y 75
4	Hardness HB	187-269	235			Separated Test Block of Casting:Y 75
5	Hardness on the casting HB	187-269	212	216	210	/

III 金相组织 Microstructure 依据 based on GB/T9441-2009

球化等级 Nodule Level	85%
基体组成 Matrix	P65
石墨大小 Graphite Size	6

IV. 金相组织照片 Microstructure Photos

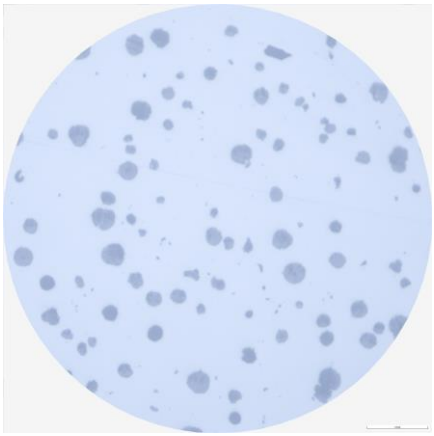

100X 未浸蚀 Un-erode

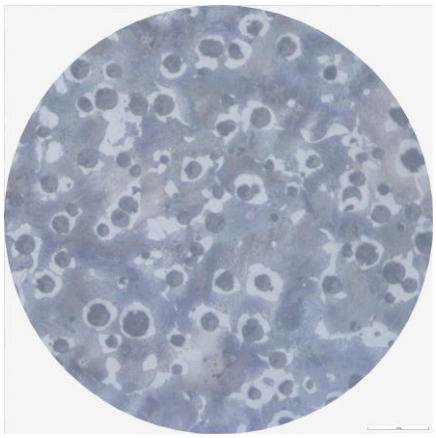

100X 4+96 硝酸酒精溶液浸蚀
Erode by Nitric Acid with alcohol base Solvent

普什联动科技有限公司
PUSH LINKO TECHNOLOGY CO.,LTD.
ADD.5#HUANYANG,YUEJIANG YIBIN,SICHUAN,CHINA
ZIP:645152 TEL:(0831)5352019 FAX:(0831)5352002

编 号：QR1201
serail number:QR1201
版本号：V2.0
revision:V2.0

热 处 理 记 录
Heat Treatment Record

开始通电时间 Time of powered on	年 月 日 时 分 2023 year 02 month 23 date 16 hour 45 minute
开始保温时间 temperature holding begins at	年 月 日 时 分 2023 year 02 month 24 date 03 hour 32 minute
保温结束时间 temperature holding ends at	年 月 日 时 分 2023 year 02 month 24 date 10 hour 00 minute
出 炉 时 间 Time of lifting out from the furnace	年 月 日 时 分 2023 year 02 month 25 date 09 hour 02 minute

工艺要求曲线
required curve by engineering

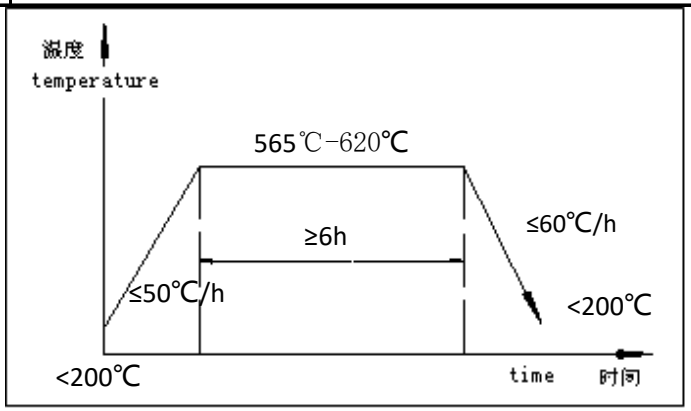

要求：
在左图上注明装炉温度、升温速度、保温温度、保温时间、降温速度、出炉温度。
Requirements:
Temperature of lifting into furnace, temerature rising speed, holding time, cooling speed and that of lifting out from the furnace shoud be noted on the left sketch.

入 炉 铸 件 information of castings in furnace

铸 件 名 称 discription of casting	铸件编号 serial number	件 数 quantity	铸 件 名 称 discription of casting	铸件编号 serial number	件 数 quantity
TA3000 Gearbox Box	PF23021512	1			

备 注：根据英格索兰规范AAIL-648进行热处理操作。
remarks: Heat treatment conducted according to Ingersoll-Rand Spec. AAIL-648.

热处理操作人员签字：
signature of operator:Zhao Zhixiong

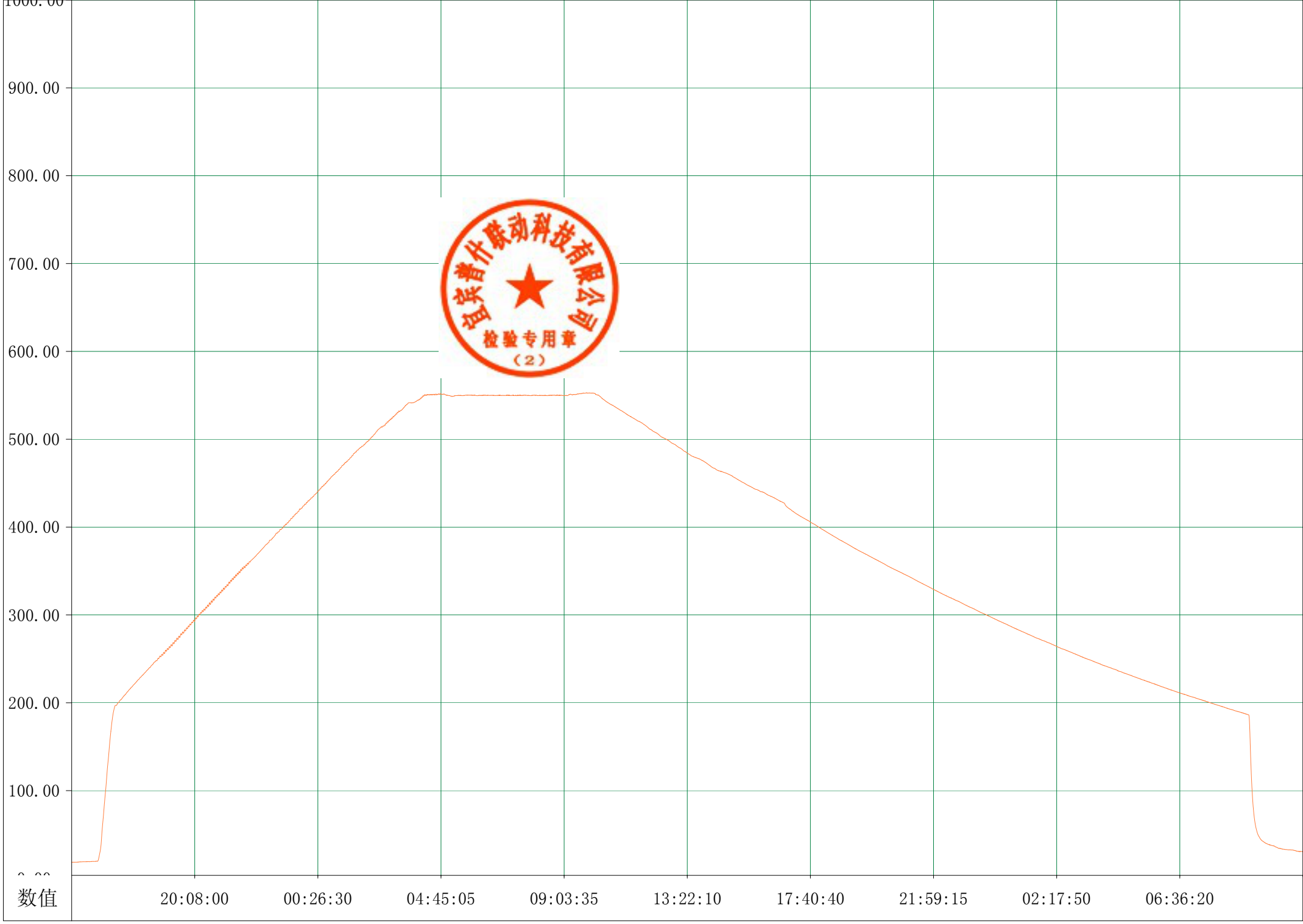

设备名称：

开始时间:2023-02-23 15:49:40

结束时间:2023-02-25 10:54:55

打印时间：2023-03-04 10:45:06

通道04[℃]

普什联动科技有限公司
PUSH LINKO TECHNOLOGY CO.,LTD.
ADD.5#HUANYANG,YUEJIANG YIBIN,SICHUAN,CHINA
ZIP:645152 TEL:(0831)5352019 FAX:(0831)5352002

定单号 PO:30016280

顾客名称 Customer Name Ingersoll-Rand Company	零件名称 Part Name: ☒ TA3000(60) cap	DRAWING NO图号 ☒AAR1793898-03060	Rev.版本号 Rev.02
材料规范 Material spec. 80-55-6	**Report Reason 报告原因:** ☐**Sample 样件** ☒**Pilot Run 小批量** ☐**Batch Run 大批量**		
中央实验主管签字 Signature of the Central Lab Mgr. 何秀芬	质量保证主管签字 Signature of the Central Lab Mgr. 李露升	日期 Date 2023.01.28	

炉号 Heat No.: 3-23-026-1 铸件序号 Castings serial No. 23011122

I 化学成份 Chemistry Composition :

	C%	Si%	Mn%	P%	S%	Cu%	Mg%	Ti%
实测值 Actual	3.65	2.38	0.26	0.031	0.016	0.63	0.034	0.015

II 物理性能 Physical Prorperties :

No.	Description	规定值 Specification	实测值 Actual			Note
1	Tensile Strength, Ultimate (Mpa)	≥552	650			Separated Test Block of Casting:Y 75
2	Tensile Strength, Yield(Mpa)	≥379	404			Separated Test Block of Casting:Y 75
3	Elongation at Break(%)	≥6	7. 0			Separated Test Block of Casting:Y 75
4	Hardness HB	187-269	237			Separated Test Block of Casting:Y 75
5	Hardness on the casting HB	187-269	213	213	215	/

III 金相组织 Microstructure 依据 based on GB/T9441-2009

球化等级 Nodule Level	85%
基体组成 Matrix	P65
石墨大小 Graphite Size	6

IV. 金相组织照片 Microstructure Photos

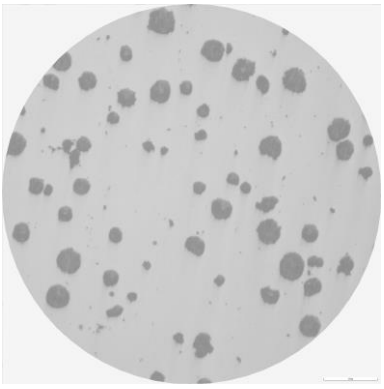

100X 未浸蚀 Un-erode

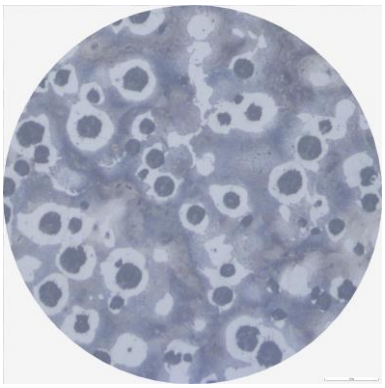

100X 4+96 硝酸酒精溶液浸蚀
Erode by Nitric Acid with alcohol base Solvent

普什联动科技有限公司
PUSH LINKO TECHNOLOGY CO.,LTD.
ADD.5#HUANYANG,YUEJIANG YIBIN,SICHUAN,CHINA
ZIP:645152 TEL:(0831)5352019 FAX:(0831)5352002

编 号：QR1201
serail number:QR1201
版本号：V2.0
revision:V2.0

热 处 理 记 录
Heat Treatment Record

开始通电时间 Time of powered on	年 月 日 时 分 2023 year 01 month 28 date 16 hour 33 minute
开始保温时间 temperature holding begins at	年 月 日 时 分 2023 year 01 month 29 date 03 hour 30 minute
保温结束时间 temperature holding ends at	年 月 日 时 分 2023 year 01 month 29 date 10 hour 00 minute
出 炉 时 间 Time of lifting out from the furnace	年 月 日 时 分 2023 year 01 month 30 date 09 hour 13 minute

工艺要求曲线
required curve by engineering

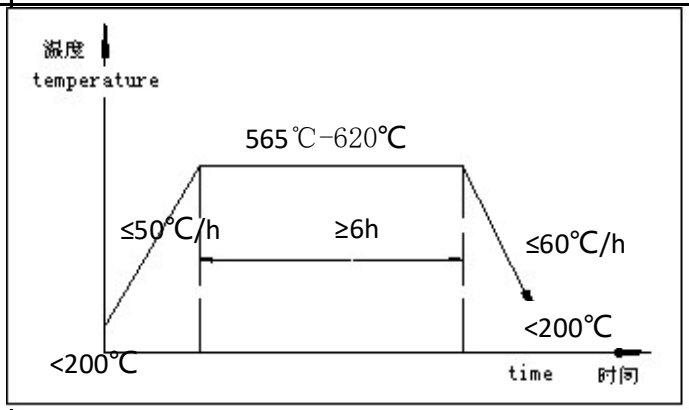

要求：
在左图上注明装炉温度、升温速度、保温温度、保温时间、降温速度、出炉温度。
Requirements:
Temperature of lifting into furnace,temerature rising speed,holding time,cooling speed and that of lifting out from the furnace shoud be noted on the left sketch.

入 炉 铸 件 information of castings in furnace

铸件名称 discription of casting	铸件编号 serial number	件 数 quantity	铸件名称 discription of casting	铸件编号 serial number	件 数 quantity
TA3000 Cap	23011122	1			

普什联动科技有限公司 检验专用章 (2)

备 注：根据英格索兰规范AAIL-648进行热处理操作。
remarks: Heat treatment conducted according to Ingersoll-Rand Spec. AAIL-648.

热处理操作人员签字：
signature of operator:Zhao Zhixiong

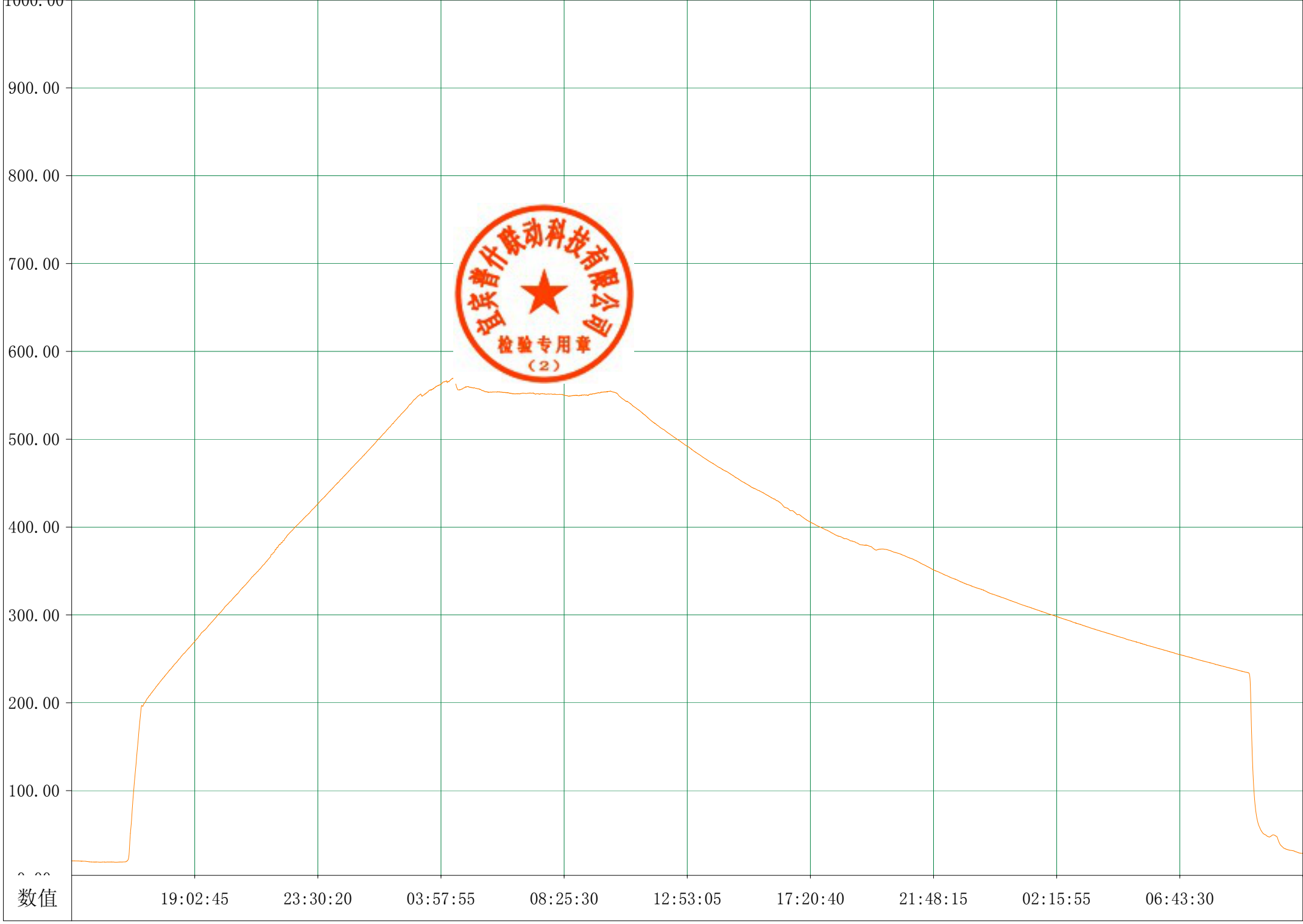

设备名称：　　开始时间:2023-01-28 14:35:25　　结束时间:2023-01-30 11:11:05　　打印时间：2023-02-14 10:57:42

通道04[℃]

上 海 美 螺 工 业 紧 固 件 有 限 公 司

SHANGHAI MLFASTENER CO.,LTD.

成品质量检验报告

CERTIFICATE OF INSPECTION

EN10204-3.1

DESCR. 产品名称	美制内六角螺栓 GR8	Report NO. 报告单号	SHML0180426001
Size 产品规格	3/4*3-1/2	Date 日 期	2018.04.26
Sampling plan 制造标准	ASME/ANSI B18.3	Material 材 料	SCM440

机 械 性 能 测 试 报 告

Test Item 项 目	Test method 试验依据	Specified 标准值	Actual Result 实测值	Result determination 结 论
Hardness/硬度	ASME A574	HRC38-45	HRC41	合格
Tensile Strength 抗拉强度（MPa）	ASME A574	1120N/mm2	1160N/mm2	合格
Proof Strength 屈服强度（MPa）	ASME A574	1008N/mm2	1052N/mm2	合格

化 学 成 分 分 析 （ % ）

Test Item/项 目	C	Si	Mn	P	S	Ni	Cr	Cu	Mo
Specified/标准值	0.38~ 0.43	0.15~ 0.35	0.60~ 0.68	≤ 0.035	≤ 0.04	/	0.80~ 1.10	/	0.15~ 0.25
Actual Result 实测值	0.41	0.28	0.61	0.022	0.021	/	1.02	/	0.2

We hereby certify that the above is correct and the material was manufactured and tested in accordance with and meets with specification.

The report must not be reproduced except in full and relate only to the item tested.

兹证明以上检测结果是正确属实的，并符合表中所列规范。

上海美螺工业紧固件有限公司 品保专用章

AUTHORIZED SIGNATURE

上 海 美 螺 工 业 紧 固 件 有 限 公 司

SHANGHAI MLFASTENER CO.,LTD.

成品质量检验报告

CERTIFICATE OF INSPECTION

Product model : GB848-2000

Product name : Flat pad　　Specifications : M20

Performance level : /　　Surface : Galvanized

Product quality results are as follows :　　Unit of measurement : mm

	Inspection items	Standard	Detection result	Result determination
Appearance size function	thickness	2.7~3.3	3.1	qualified
	Internal diameter	21.00~21.33	21.19	qualified
	External diameter	33.38~34.00	33.53	qualified

NOTE:

feeding test according to GB848-2000, the appearance of the general detection Ⅰ level, the size of the special detection S-2 sampling level.

按照GB848-2000标准流水检测，一般检测外观为Ⅰ级，关键尺寸按S-2级别抽样检测。

AUTHORIZED SIGNATURE

DATE : 2018.04.21

上海美螺工业紧固件有限公司 品保专用章

上 海 美 螺 工 业 紧 固 件 有 限 公 司

SHANGHAI MLFASTENER CO.,LTD.

成品质量检验报告

CERTIFICATE OF INSPECTION

Product model: ASME B18.2-4.1M-1999

Product name: Hex nut Specifications: 1/2-13UNC

Performance level: 12.9level

Product quality results are as follows: Unit of measurement: mm

	Inspection items	Standard	Detection result	Result determination
Appearance size function	On the edge	17.73~18.00	17.92	qualified
	Thickness	10.37~10.80	10.67	qualified
	Pass stop gauge	Whether smooth	smooth	qualified

NOTE:

feeding test according to B18.2-4.1M-1999 ASME, the appearance of the general detection Ⅰ level, the size of the special detection S-2 sampling level, through the use of special detection S-3 level.

按照 B18.2-4.1M-1999 ASME 标准流水检测，一般检测外观为Ⅰ级，关键尺寸按 S-2 级别抽样检测，通过 S-3 级特殊检测使用

上海美螺工业紧固件有限公司 品保专用章

AUTHORIZED SIGNATURE

DATE: 2018.04.26

上 海 美 螺 工 业 紧 固 件 有 限 公 司

SHANGHAI MLFASTENER CO.,LTD.

成品质量检验报告

CERTIFICATE OF INSPECTION

Product model : DIN906-83

Product name : Plug

Specifications : 1/4 NPT

Performance level : 12.9level

Surface : Black

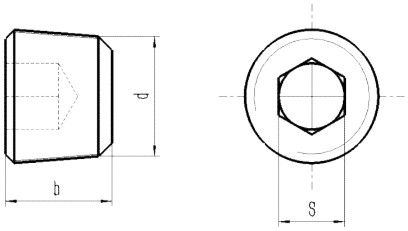

Product quality results are as follows : Unit of measurement : mm

	Inspection items	Standard	Detection result	Result determination
Appearance size function	d	6.00~6.35	6.20	qualified
	b	10.0~10.2	10.1	qualified
	s	6.9~7.1	7.0	qualified

NOTE :

feeding test according to DIN906-83, the appearance of the general detection Ⅰ level, the size of the special detection S-2 sampling level.

按照GB848-2000标准流水检测，一般检测外观为Ⅰ级，关键尺寸按S-2级别抽样检测。

AUTHORIZED SIGNATURE :

DATE : 2018.04.28

上海美螺工业紧固件有限公司 品保专用章

上 海 美 螺 工 业 紧 固 件 有 限 公 司

SHANGHAI MLFASTENER CO.,LTD.

成品质量检验报告

CERTIFICATE OF INSPECTION

Product model : DIN906-83

Product name : Plug

Specifications : 1/2 NPT

Performance level : 12.9level

Surface : Black

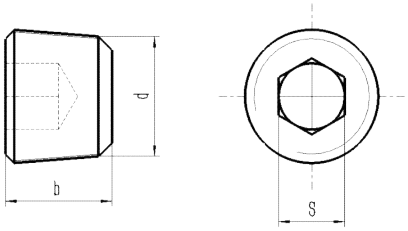

Product quality results are as follows : Unit of measurement : mm

	Inspection items	Standard	Detection result	Result determination
Appearance size function	d	12.7~12.8	12.8	qualified
	b	10.0~10.2	10.1	qualified
	s	10.0~10.2	10.2	qualified

NOTE :

feeding test according to DIN906-83, the appearance of the general detection Ⅰlevel, the size of the special detection S-2 sampling level.

按照GB848-2000标准流水检测，一般检测外观为Ⅰ级，关键尺寸按S-2级别抽样检测。

AUTHORIZED SIGNATURE

DATE : 2018.04.28

上海美螺工业紧固件有限公司 质保专用章

上 海 美 螺 工 业 紧 固 件 有 限 公 司

SHANGHAI MLFASTENER CO.,LTD.

成品质量检验报告

CERTIFICATE OF INSPECTION

Product model : DIN906-83

Product name : Plug

Specifications : 1/8 NPT

Performance level : 12.9level

Surface : Black

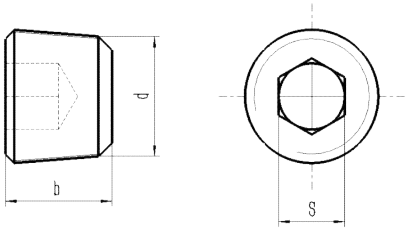

Product quality results are as follows : Unit of measurement : mm

	Inspection items	Standard	Detection result	Result determination
Appearance size function	d	3.0~3.2	3.0	qualified
	b	7.9~8.1	8.1	qualified
	s	4.9~5.1	5.0	qualified

NOTE :

feeding test according to DIN906-83, the appearance of the general detection Ⅰlevel, the size of the special detection S-2 sampling level.

按照GB848-2000标准流水检测，一般检测外观为Ⅰ级，关键尺寸按S-2级别抽样检测。

AUTHORIZED SIGNATURE

DATE : 2018.04.28

上海美螺工业紧固件有限公司 品保专用章

上 海 美 螺 工 业 紧 固 件 有 限 公 司

SHANGHAI MLFASTENER CO.,LTD.

成品质量检验报告

CERTIFICATE OF INSPECTION

Product model: GB848-2000

Product name: Flat pad　　Specifications: M12

Performance level: /　　Surface: Galvanized

Product quality results are as follows:　　Unit of measurement: mm

	Inspection items	Standard	Detection result	Result determination
Appearance size function	thickness	1.8~2.2	2.0	qualified
	Internal diameter	13.00~13.27	13.15	qualified
	External diameter	19.48~20.00	19.80	qualified

NOTE:

feeding test according to GB848-2000, the appearance of the general detection Ⅰ level, the size of the special detection S-2 sampling level.

按照GB848-2000标准流水检测，一般检测外观为Ⅰ级，关键尺寸按S-2级别抽样检测。

上海美螺工业紧固件有限公司 品保专用章

AUTHORIZED SIGNATURE

DATE: 2018.04.21

Ingersoll Rand
338 Valley Rd
Mocksville, NC 27028

DOCUMENT 2B: MATERIAL CERTIFICATIONS: GEARING

Date:	02/08/2024
Customer:	Air Products
User:	Air Products
Compressor Model:	TA3000
Customer Order Number:	4505773730
Compressor Serial Number:	22590

TO WHOM IT MAY CONCERN:

Ingersoll Rand hereby certifies the bullgear conforms to applicable specifications: AGMA (remove if not required), AISI-AAIL-0951, AISI-4340E AQ and AMS2301 (shaft only).

- Bullgear (34CrNiMo6) and Shaft (4140E Steel): SN 413



Donald J Bauch
PAC Quality Engineer
Ingersoll Rand

Columbia Gear Corporation

A SUBSIDIARY OF INDUSTRIAL MANUFACTURING COMPANY

Certificate of Compliance

I, the undersigned, hereby confirm that the shipment described below meets all of the requirements according to specifications and that the said parts have been manufactured in accordance with the latest requirements. All pertaining records will be on file at Columbia Gear for your review.

Customer Name:	Ingersoll Rand		
Purchase Order Number:	30019282-145		
Part Number & Revision:	AAP3793815-03163A		
Part Description:	BULLGEAR ASSEMBLY - AGMA 12		
Quantity:	5	***Date:***	Aug 18, 2023
Serial Numbers:	Assm SO 266726 - SN 412-414, 417, 418		

Columbia Gear Corporation

Sara Peters
Signature

QA Administrative Assistant
Title

GEORG Umformtechnik GmbH

GEORG

Georg Umformtechnik GmbH, Grubenstraße 5, 56594 Willroth

Besteller: Customer: Columbia Gear Corporation 530 Co Rd 50 USA 56310 Avon, MN	**Abnahmeprüfzeugnis Nr. 19104-1** **Certificate no. 19104-1** **EN 10204:2005-01 / 3.1** Datum Date: **16.03.23** 5-31-23
Prüfgegenstand: Test object: BULLGEAR	Prüfnummer: Inspection-no.: -715389
Zeichnungs-Nr.: Drawing-no.: AAR1793757-03000 Index Kunde: -	Bestell-Nr.: Order-no.: 264342 vom: dated: 11.05.22
Erzeuger: Manufacturer: Metal-Ravne	Lieferschein: Delivery note: 344956 vom: dated: 16.03.23
Erschmelzungsart: Steelmaking process: E+VAD	Kom.-Nr.: Com.-no.: 35088-209450
Werkstoff: Material grade: 34CrNiMo6	Zeichen des Herstellers: Brand of producer: E
Entsprechend: According to: AAIL-0951	Stempel des Abnahmebauftragten: Stempel des Abnahmebauftragten:
Lieferzustand: Condition of delivery: +QT	
Anforderungen: Requierments: DIN EN 10254	Kennzeichnung: Sign: R1793757-03000
Lieferposition: Item-no. of del.:	Kurzzeichen - Fertigungslosnummer: Short sign - Batch-no. of production: AH
Stückzahl: Quantity: 34	

Chemische Zusammensetzung: Chemical composition:

Schmelze heat:	C %	Si %	Mn %	P %	S %	Cr %	Mo %	Ni %	Cu %	K4 %	RR %			
soll min.	0,37	0,20	0,55			0,65	0,20							
soll max	0,44	0,35	0,90	0,040	0,040	0,95	0,30		0,35					
119066	**0,40**	**0,25**	**0,73**	**0,006**	**0,001**	**0,84**	**0,24**	**1,94**	**0,11**	--	--			

Korngröße/Mikro Grain size:	7-8	Schlagkraft: Impact force:		
Jominy-Probe:	7	20		mm
Jominy-test:	54	50		HRC

Ergebnisse der Prüfungen: Test results:

Probe Nr. Test-No.	Abmessung Probestab in mm Dim. of spec.	Streckgrenze Yield stress in N/mm² $R_{p0,2}$	Dehngrenze Proof stress in N/mm² $R_{p1,0}$	Zugfestigkeit Tensil strength in N/mm² Rm	Dehnung Elongation L_0=5d in % A_5	Einschnürung Reduction of area in % Z	Schlagarbeit/Prüftemp. Energy of impact/Test temp. ISO-V in J 20.00°C
807389	Anforderung demand	> 1000		1070-1220	> 12	> 45.0	
1	10.00	1060		1173	14.20	55.0	

Härteprüfung an Hardness-test from 5 % der Lieferung of delivery HB= 352 - 354

Bemerkung: Remark: Hardness Test HB10/3000 converted according DIN 50150
100% Cracktest

Gear
AAP3793815-03163A
SO 266726
PO 30019282-145
SN 412-414, 417, 418

2315100092

GEORG Umformtechnik GmbH

GEORG

Georg Umformtechnik GmbH, Grubenstraße 5, 56594 Willroth

Besteller: Customer: Columbia Gear Corporation 530 Co Rd 50 USA 56310 Avon, MN	**Abnahmeprüfzeugnis Nr. 19104-1** **Certificate no. 19104-1** **EN 10204:2005-01 / 3.1** Datum / Date: **16.03.23**
Besichtigung und Ausmessung ohne Beanstandung Visual inspection and dimensional check without complaint Die Bestellanforderungen sind erfüllt The purchase requisitions are fulfilled	GEORG Umformtechnik GmbH i. A. Fetthauer Abnahmebeauftragter Inspector Dieses Dokument wurde automatisch erstellt und ist auch ohne Unterschrift rechtsgültig. This document has been produced automatically and is legally valid without signature.

Gear
AAP3793815-03163A
SO 266726
PO 30019282-145
SN 412-414, 417, 418

848505

Flame Metals Processing Corp.
Shipping Ticket

Order No.: 848505
Ship Date: 12/8/2022

Sold To: 845
COLUMBIA GEAR
530 COUNTY ROAD 50
AVON MN 56310

Page 1 of 1
Thu - 12/8/2022

Ship To: 910738
COLUMBIA GEAR
530 COUNTY ROAD 50
AVON MN 56310

Purchase Order Number	Packing List No	Customer Job No	Carrier
270496-1	SO#: 262491		TT

Quantity	Part No. / Part Name / Part Description	Pounds
13	1793815-03153 Rev.05,Date: 9/9/16 (Q&T) Shaft, Bullgear, E4140 AQ Steel Harden and temper to 28-35 HRC	559.

INGDA

Container Type	# Of Containers	Cust Cont Id	Container Type	# Of Containers	Cust Cont Id
Wire Basket	1	FLR			

Flame Metals is ISO 9001:2015 registered.

Shipped Complete

Quantity Shipped: 13
Pounds Shipped: 559.00

RECEIVED
DEC 08 2022
COLUMBIA GEAR

Shaft
AAP3793815-03163A
SO 266726
PO 30019282-145
SN 412-414

Packing and Shipping Record (Results recorded on FMPC's signature copy and not on customers copy)				
Final Packing Date	Packer's Initials	Gross Weight	Piece Weight (Optional)	Tare Weight (Optional)
Packaging Description / Notes		Storage Location	Customer Notification Date / Method / Notes	

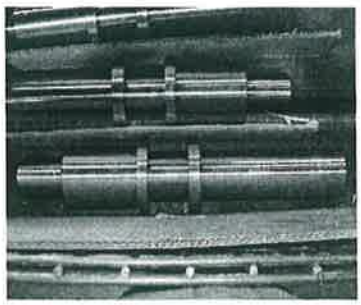

Order No.: 848505
Phone: 320-356-7301

Shipped Complete

Quantity Shipped: 13.00
Pounds Shipped: 559.00

Received By:

Date:

Sold To: COLUMBIA GEAR

Shaft
AAP3793815-03163A
SO 266726
PO 30019282-145
SN 412-414

Flame Metals Processing Corp.
Certification

Order No.: 848505
Date: 12/08/2022
Entry Date: 12/01/2022

To:
COLUMBIA GEAR
530 COUNTY ROAD 50

AVON MN 56310

Purchase Order No.: 270496-1
Packing List No.: SO#: 262491
Material: 4140

We are pleased to provide you with the following Certification

Quantity	Part Number / Part Name / Part Description	Pounds
13	1793815-03153 Rev.05,Date: 9/9/16 (Q&T) Shaft, Bullgear, E4140 AQ Steel Harden and temper to 28-35 HRC	559

Print

Insp. Type	Scale	Minimum	Maximum	Number	Other	Inspection ID#
Hardnss	HRC	50.	57.	.	As Quench Hardness	
Hardnss	HRC	28.	35.	.	Final As Tempered Surface Hard	

The undersigned, individually, and as the authorized representative of the contractor, warrants and represents that: To the best of our knowledge all the information supplied below is true and accurate. The certificate conforms to all requirements (including purchase orders, drawings, specifications & as applicable per quote); the inspection test results and analyses appearing herein are true and accurate; and this certificate is made for the purpose of reporting quality findings.

Processed OK.

Surface Hardness = HRC:
31.8 to 32.8

David F. Hogue
12.08.2022

Mohamed P. Jalloh

Mohamed P.Jalloh
Quality Control Manager
Flame Metals Processing Corporation

12450 Ironwood Circle Rogers MN 55374 **Phone:** (763) 428-2596 **Fax:** (763) 428-3689

Shaft
AAP3793815-03163A
SO 266726
PO 30019282-145
SN 412-414

Castle Metals®

A. M. Castle & Co.

PACKING SLIP/
CERTIFICATE OF CONFORMANCE

Shipment No:4676272

Ship From:	Sold To:	Ship To:	Deliver To:
JANESVILLE 3800 ENTERPRISE DRIVE JANESVILLE, WI 53546 USA	COLUMBIA GEAR CORP. 530 COUNTY ROAD 50 AVON, MN 56310 US	COLUMBIA GEAR CORP. FLAME METALS 12450 IRONWOOD CIRCLE ROGERS, MN 55374 USA	COLUMBIA GEAR CORP. FLAME METALS 12450 IRONWOOD CIRCLE ROGERS, MN 55374 US

Date Shipped	Inco Terms	Freight Terms	Carrier	BOL No
11-NOV-22	FCA ROGERS MN USA	Prepaid	TQ LOGISTICS	4676272-4

Shipment Details	Final Destination Branch - JVL

Order No	Line No	Item No	Description
1113050500	1	11606.MO	4.5000.RD.E4140.HR.AQ.ANN.ALLOY CUT TO 20.5625 IN (+ .1250/- .0000 IN) - BAND SAW CUTTING SPECIFICATIONS: AISI 4140,AMS 2301,AMS 6382,ASTM A29,ASTM A322,UNS G41400

Purchase Order No	Part Number	Ordered Qty	Invoice Qty
269631 LINE 1	YOUR ITEM NUMBER: 179381503153SB	13.00 PCS	13.00 PCS

Details 2231800057

Delivery No.	Mill	Heat Number	Mech Id	PCS	Width (IN)	Length (IN)	Shipped Qty(LBS)
124613755		Y9928	A9498	13			1227.3301

These items are controlled by the U.S. Government and authorized for export only to the country of ultimate destination for use by the ultimate consignee or end-user(s) herein identified. They may not be resold, transferred, or otherwise disposed of, to any other country or to any person other than the authorized ultimate consignee or end-user(s), either in their original form or after being incorporated into other items, without first obtaining approval from the U.S. Government or as otherwise authorized by U.S. law and regulations.

We hereby certify the material covered by this certification conforms in accordance with the above specifications and has been found to meet the applicable requirements for the material, including any specifications forming a part of the description. Test reports are on file subject to examination. All claims for defective material are waived unless made in writing to A.M. Castle & Co. within 60days of the shipment. Material ordered the correct size, or material cut by the customer cannot be returned for credit.

Reviewed by Authorized Castle Metals Representative: Date: 11/11/22 Name:

Date Printed: 11-NOV-2022 04:53:11 PM

Shaft
AAP3793815-03163A
SO 266726
PO 30019282-145
SN 412-414

CERTIFICATE OF MATERIAL TEST REPORTS

H-A Industries
A Division of A. M. Castle & Co.
4527 Columbia Avenue
Hammond, IN 46327

Customer:
A. M. Castle & Co.
1420 Kensington Road
Suite 220
Oak Brook, IL 60523

MANUFACTURER (MILL)	CUST. ORDER NO.
TIMKENSTEEL CORPORATION	

IC	HEAT NO.	MECHANICAL ID	ORDER NO.	SHIP QUANTITY	DATE
11606	Y9928	A9498	13116207	11337	22-AUG-22

DESCRIPTION OF MATERIAL

4.5000.RD.E4140.ALLOY.HR.ANN.AQ.AMS 6382.216.0000-288.0000

CHEMICAL ANALYSIS %

C	MN	P	S	SI	CU	NI	CR	MO	AL
.42	.98	.012	.016	.32	.22	.09	.94	.21	.028

JOMINY HARDENABILITY Rc

1	2	3	4	5	6	7	8	9	10	11	12	13	14	15	16	18	20	22	24	26	28	30	32
56	57	56	56	56	56	55	55	55	53		51		49		47	44	43		40		37		38

METALLURGICAL

MACROETCH S:2 R:1 C:2	AMS 2301 F: 0 S: 0		USMCA YES	GRAIN SIZE 52	
	REDUCTION RATIO 11.8		FROM IC 32548		
COUNTRY OF MANUFACTURE United States	COUNTRY OF MELT US				

HEAT TREATMENT

					% LP ANNEAL 85		HRS 5.5	TEMP °F 1570	

HARDNESS

Location	Type		Location	Type	
SURF	HBW	175	SURF	HBW	178
SURF	HBW	177	SURF	HBW	176
SURF	HBW	172			

CONFORMANT TO SPECIFICATIONS

AMS 6382R
ASTM A29-20
ASTM A304-20
ASTM A322-13 (REAPPROVED 2018)
AMS 2301L

H-A INDUSTRIES CERTIFIES THAT APPROPRIATE INFORMATION IS TAKEN FROM TEST REPORTS FURNISHED TO US BY OUR SUPPLIER AND WHICH ARE ON FILE IN OUR OFFICE. H-A INDUSTRIES CERTIFIES THAT THE MATERIAL LISTED HEREIN HAS BEEN INSPECTED AND TESTED IN ACCORDANCE WITH METHODS PRESCRIBED IN THE GOVERNING SPECIFICATIONS. THE RESULTS OF INSPECTION AND TESTING CONFORM TO THE SPECIFICATIONS LISTED INCLUDING ASTM A370 LATEST REVISION AND EN 10204:2004 3.1.

H-A CERTIFIES THAT THE METAL WHICH IS THE SUBJECT OF THIS CERTIFICATION IS MERCURY FREE AND WAS NOT EXPOSED TO ANY RADIOACTIVE SOURCE MATERIAL DOES NOT CONTAIN ANY POLYBROMINATED BIPHENYLS (PBB) OR POLYBROMINATED DIPHENYL ETHERS (PBDE). NO WELD OR WELD REPAIR WAS PERFORMED ON THIS MATERIAL.

THE RECORDING OF FALSE, FICTITIOUS OR FRAUDULENT STATEMENTS OR ENTRIES ON THIS DOCUMENT MAY BE PUNISHABLE AS A FELONY UNDER FEDERAL STATUTE.

NAME: JAN L. CARUSO
TITLE: MANAGER OF TECHNICAL SERVICES
SIGNATURE: Jan L. Caruso

Shaft
AAP3793815-03163A
SO 266726
PO 30019282-145
SN 412-414

32548

Steel Certificate of Test

1835 Dueber Ave. S.W.
Canton, Ohio 44706
ID #0559177-1

TIMKENSTEEL

6/14/2022

SOLD TO: A M Castle & Company
1420 Kensington Road
Suite 220
Oak Brook, IL 60523 USA

SHIP TO: H A Industries
4527 Columbia Avenue
Hammond, IN 46327 USA

Customer Order: 594657 32548
Mill Order: 20893-A (2278731)
Customer Part Number: 32548
Heat Number(s): Y9928

Description of Material

DIAMETER: 4.500 in (114.300 mm)
Shape: RD
Prod Type: BAR
Sales Type: 4140
Int Quality: ELECTRIC FURNACE-VACUUM DEGAS-AIRCRAFT
Condition: HOT ROLL

Specification

- A M CASTLE & COMPANY G41400-208 Rev. 28 07/22/2020 EXCEPT AS NOTED
- AMS 6382 Rev. R 08/14/2018 EXCEPT ANNEAL AND HARDNESS
- AMS 2301 Rev. L 05/19/2020
- EUROPEAN STANDARD EN 10204 12/17/2004 TYPE 3.1 INSPECTION CERTIFICATE
- AMS 2259 Rev. F 10/25/2017
- AMS 2251 Rev. J 11/05/2018 EXCEPT AS NOTED
- AMS 2370 Rev. L 06/20/2016
- ASTM A322 Rev. 13 (Reapproved 2018) e1 09/01/2018
- ASTM A304 Rev. 20 07/01/2020 EXCEPT AS NOTED
- ASTM A29 / A29M Rev. 20 07/01/2020 EXCEPT AS NOTED

Chemistry Information

	%C	%Mn	%P	%S	%Si	%Cr	%Ni	%Mo	%Cu	%Al	%V	%As	%B	%Ca	%Cb
SPEC Ladle Min:	.38	.75			.20	.80		.15		.020					
SPEC Ladle Max:	.43	1.00	.025	.025	.35	1.10	.25	.25	.35	.050					
Y9928 Ladle:	.42	.98	.012	.016	.32	.94	.09	.21	.22	.028	.004	.006	.0002	.0003	.003
Y9928 C1B04:	.41	.99	.013	.017	.32	.97	.09	.22	.22	.030	.003	.006	.0001	.0001	.002

	%Co	ppmH	%Pb	%Sb	%Sn	%Ti	%W	%Zr
SPEC Ladle Min:								
SPEC Ladle Max:		2.5						
Y9928 Ladle:	.008	1.0	.0010	.002	.009	.002	.004	.002
Y9928 C1B04:	.008		.0010	.002	.010	.001	.004	.001

Testing of elements performed at TimkenSteel Chemistry Labs except where noted.

Metallurgy Information

SPEC: Grain Size ASTM E112 SIZE 5/FINER
5/FINER
GRAIN SIZE OF 5/FINER BASED UPON ALUMINUM CONTENT

When shipping document is attached it becomes part of this certification.

We certify the above materials have been inspected and tested in accordance with the methods prescribed in the governing specifications and consistent with our Standard Commercial Terms and Conditions for Sale, Manufacture, and Shipping, which are incorporated into and made part of this certification. The results of such inspections and tests conform with the applicable requirements including the purchase order, specification(s) and exception(s). This certificate or report shall not be reproduced except in full, without the written approval of TimkenSteel Corporation.

Notarized: _____ NOTARY PUBLIC by Lisa Bucklew

Lisa Bucklew, METALLOGRAPHER

TimkenSteel Corporation

Shaft
AAP3793815-03163A
SO 266726
PO 30019282-145
SN 412-414

Steel Certificate of Test

1835 Dueber Ave. S.W.
Canton, Ohio 44706

ID #0559177-1

TIMKENSTEEL

6/14/2022

Customer Order: 594657 32548 Customer Part Number: 32548
Mill Order: 20893-A (2278731) Heat Number(s): Y9928

Metallurgy Information

SPEC: Decarb E1077 (Info Only) UOM IN

Heat	Sample	LEVEL	UOM
Y9928	762014	0.010	IN

SPEC: Jominy English AUSTENITIZING TEMPERATURE 1550 F / 843 C NORMALIZING TEMPERATURE 1700 F / 927 C
SAMPLE TYPE CAST 4140H

Location:	1	2	3	4	5	6	7	8	9	10	11	12	13	14	15	16	18	20	22	24	26	28	30	32	36	40
SPEC Min:	53	53	52	52	51	50	48	47	44	42	40	39	38	37	36	35	34	33	33	32	32	31	31	30		
SPEC Max:	60	60	60	59	59	58	58	57	57	56	56	55	55	54	54	53	52	51	49	49	47	46	45	44		
Y9928 ACF1:	59	57	56	56	56	56	55	55	54	53	52	51	50	49	48	47	44	43	41	40	39	37	37	38	38	35

SPEC: Msp Std (AMS 2301) FREQUENCY 0.340 Max SEVERITY 0.250 Max
Heat Y9928 AMS 2301 FREQUENCY: 0.000 SEVERITY: 0.000
All Hardness and Tensile testing performed at TimkenSteel Metallurgical Lab except where noted.

Heat Y9928 Melt Source: USA
Manufacturing: USA
Heat Y9928 - Strand Cast Process
REDUCTION RATIO - 11.8:1

MATERIAL IS ALSO DESIGNATED AS UNS# G41400

DFARS 252.225-7008 AND 252.225-7009 COMPLIANT (FORMERLY DFARS 252.225-7014)

Macroetch equal to or better than S2 R1 C2 in accordance with ASTM E381

The recording of false, fictitious or fraudulent statements or entries on this document may be punishable as a felony under Federal Statute Title 18, Chapter 47.

Ultrasonic in lieu of hydrostatic testing - Satisfactory.

TimkenSteel certifies that there is no mercury or radio-active material used in the melting or processing.

USMCA - YES

MATERIAL WAS ELECTRIC FURNACE MELTED, VACUUM DEGASSED AND LADLE REFINED

No welding of this material has occurred.

In reference to Section 1502 ("Conflict Minerals") of the Dodd-Frank Wall Street Reform and Consumer Protection Act, no tantalum, tin, tungsten or gold was intentionally added to this material.

Initial: BJL

JUN 28 2022

ENTERED

Ingersoll Rand
338 Valley Rd
Mocksville, NC 27028

DOCUMENT 2C: MATERIAL CERTIFICATIONS: GEARING

Date:	02/08/2024
Customer:	Air Products
User:	Air Products
Compressor Model:	TA3000
Customer Order Number:	4505773730
Compressor Serial Number:	22590

TO WHOM IT MAY CONCERN:

Ingersoll Rand hereby certifies the pinions conform to applicable specifications: AGMA (remove if not required), AISI-4340E AQ, and AMS2301.

- Low speed Pinion (4340E Steel): SN 265235-2444
- High speed Pinion (4340E Steel): SN 266460-2298



Donald J Bauch
PAC Quality Engineer
Ingersoll Rand

Columbia Gear Corporation

A SUBSIDIARY OF INDUSTRIAL MANUFACTURING COMPANY

Certificate of Compliance

I, the undersigned, hereby confirm that the shipment described below meets all of the requirements according to specifications and that the said parts have been manufactured in accordance with the latest requirements. All pertaining records will be on file at Columbia Gear for your review.

Customer Name:	Ingersoll Rand
Purchase Order Number:	30019282-139
Part Number & Revision:	AAP1793827-02003
Part Description:	PINION ASS'Y-AGMA 12
Quantity:	7 ***Date:*** May 31, 2023
Serial Numbers:	SO 265369 (Assm 265360) - SN 2441 thru 2447

Columbia Gear Corporation

Sara Peters
Signature

QA Administrative Assistant
Title

METAL TREATING INSTITUTE

Pinion
AAP1793827-02003
SO 265369
PO 30019282-139
SN 2441 thru 2447

DIAMOND HEAT TREAT LLC
Shipping Ticket

Order No.: 472021
Ship Date: 4/24/2023

Sold To: 525
COLUMBIA GEAR CORPORATION
530 COUNTY ROAD 50

AVON MN 56310-e

Page 1 of 1

Ship To: 482221
COLUMBIA GEAR CORPORATION
530 COUNTY ROAD 50

AVON MN 56310-e

Purchase Order Number	Packing List No	Customer Job No	Route	Carrier
274515-1	191518	264266	Columbia Gea	UPS/HOLLAND

Quantity	Part No. / Part Name / Part Description	Pounds
	1793827-020031 REV D	

Containers	Container Type	Quantity	Weight
1	WIRE BASKET	14	112

PHONE: (815) 873-1348

Shipped Complete

Quantity Shipped: 14

Pounds Shipped: 112.00

STATEMENT OF LIMITED LIABILITY-All work is accepted subject to the following conditions: It is recognized that even after employing all the scientific methods known to DHT, hazards still remain in metal treating, THEREFORE DHT'S LIABILITY SHALL NOT EXCEED THE AMOUNT OF OUR CHARGES FOR THE WORK DONE ON ANY MATERIAL. The customer by contracting for metal treatment agrees to accept the limits of liability as expressed in this Statement to the exclusion of any and all provisions as to liability on the customer's own invoices, purchase orders or other documents.THE STATEMENT OF LIABILITY MENTIONED ABOVE IS SPECIFICALLY IN LIEU OF ANY EXPRESSED OR IMPLIED WARRANTY, INCLUDING ANY IMPLIED WARRANTY OF MERCHANTABILITY OR FITNESS AND OF ANY OTHER SUCH OBLIGATION ON THE PART OF THE TREATER. No claims for shortage in weight or count will be entertained unless presented within seven (7) working days after receipt of materials by customer. No claim will be made or allowed for shrinkage, expansion, deformity, or rupture of material in treating or straightening, nor for rupture caused by or occurring during subsequent grinding. Whenever DHT is given material with detailed instructions as to treatment, DHT's responsibility shall end with the carrying out of these instructions. Failure by a customer to indicate plainly and correctly the kind of material (i.e. proper designation) to be treated, shall cause an extra charge to be made to cover any additional expense incurred as a result thereof. There will be no liability on DHT for any special, indirect or consequential damages arising from any reason whatsoever, including but not limited to loss of profits, loss of production, recall or any other losses, expenses or liabilities allegedly occasioned by the work performed on the part of DHT. It shall be the duty of the customer to inspect the merchandise immediately upon its return, and in any event claims must be reported prior to the time that any further processing, assembling or any other work is undertaken. DHT'S LIABILITY TO CUSTOMER SHALL CEASE ONCE ANY FURTHER PROCESSING, ASSEMBLING OR ANY OTHER WORK HAS BEEN UNDERTAKEN ON SAID MATERIAL! No agent or representative is authorized to alter the above conditions, except in writing duly signed by an officer of DHT.

Inc COD
264266

RECEIVED
APR 26 2023
COLUMBIA GEAR

Order No.: 472021

Shipped Complete

Quantity Shipped: 14.00

Pounds Shipped: 112.00

Received By:

Date:

Sold To: COLUMBIA GEAR CORPORATION

Shipped ON: 04/24/2023

DIAMOND
HEAT TREAT, INC.

DIAMOND HEAT TREAT LLC
Certification

Order No.: 472021
Date: 04/24/2023
Entry Date: 04/14/2023

To:
COLUMBIA GEAR CORPORATION
530 COUNTY ROAD 50

AVON MN 56310-e

Purchase Order No.: 274515-1
Packing List No.: 191518
Material: 4340

.026-412

Pinion
AAP1793827-02003
SO 265369
PO 30019282-139
SN 2441 thru 2447

___421___KNOOP AT ___.025___ SURFACE HARDNESS _____80_____HR15N
CODE USED _____A1_____ MATRIX MICROSTRUCTURE--- VISUAL 500X NORMAL

STATEMENT OF LIMITED LIABILITY-All work is accepted subject to the following conditions: It is recognized that even after employing all the scientific methods known to DHT, hazards still remain in metal treating, THEREFORE DHT'S LIABILITY SHALL NOT EXCEED THE AMOUNT OF OUR CHARGES FOR THE WORK DONE ON ANY MATERIAL. The customer by contracting for metal treatment agrees to accept the limits of liability as expressed in this Statement to the exclusion of any and all provisions as to liability on the customer's own invoices, purchase orders or other documents.THE STATEMENT OF LIABILITY MENTIONED ABOVE IS SPECIFICALLY IN LIEU OF ANY EXPRESSED OR IMPLIED WARRANTY, INCLUDING ANY IMPLIED WARRANTY OF MERCHANTABILITY OR FITNESS AND OF ANY OTHER SUCH OBLIGATION ON THE PART OF THE TREATER. No claims for shortage in weight or count will be entertained unless presented within seven (7) working days after receipt of materials by customer. No claim will be made or allowed for shrinkage, expansion, deformity, or rupture of material in treating or straightening, nor for rupture caused by or occurring during subsequent grinding. Whenever DHT is given material with detailed instructions as to treatment, DHT's responsibility shall end with the carrying out of these instructions. Failure by a customer to indicate plainly and correctly the kind of material (i.e. proper designation) to be treated, shall cause an extra charge to be made to cover any additional expense incurred as a result thereof. There will be no liability on DHT for any special, indirect or consequential damages arising from any reason whatsoever, including but not limited to loss of profits, loss of production, recall or any other losses, expenses or liabilities allegedly occasioned by the work performed on the part of DHT. It shall be the duty of the customer to inspect the merchandise immediately upon its return, and in any event claims must be reported prior to the time that any further processing, assembling or any other work is undertaken. DHT'S LIABILITY TO CUSTOMER SHALL CEASE ONCE ANY FURTHER PROCESSING, ASSEMBLING OR ANY OTHER WORK HAS BEEN UNDERTAKEN ON SAID MATERIAL! No agent or representative is authorized to alter the above conditions, except in writing duly signed by an officer of DHT.

RECEIVED
APR 26 2023
COLUMBIA GEAR

Victor Enriquez Rivero
Lab Technician
DIAMOND HEAT TREAT INC.

DIAMOND
HEAT TREAT, INC.

DIAMOND HEAT TREAT LLC
Certification

Order No.: 472021
Date: 04/24/2023
Entry Date: 04/14/2023

To:
COLUMBIA GEAR CORPORATION
530 COUNTY ROAD 50

AVON MN 56310-e

Purchase Order No.: 274515-1
Packing List No.: 191518
Material: 4340

We are pleased to provide you with the following Certification

Quantity	Part Number / Part Name / Part Description	Pounds
14	1793827-020031 REV D AGMA 923 GRADE 1	112

Pinion
AAP1793827-02003
SO 265369
PO 30019282-139
SN 2441 thru 2447

Insp. Type	Scale	Minimum	Maximum	Number	Other
Customer Requirements:					
WHITE LA			.01		
TOTAL	THOUS.	.024			
15N	15N	84.	88.		

Results:

PIN MATERIAL USED____4340_____
HARDNESS TRAVERSE - PIN or PART____PIN_____

MEASURED ON A 500 GRAM LOAD
DEPTH-KNOOP
.002-597
.004-592
.006-579
.008-568
.010-545
.012-507
.014-491
.016-481
.018-465
.020-463
.022-445
.024-430

SPALLING_____CR1_____

DIRECT HRC___49_____HRC

WHITE LAYER_____.0005_____WL

SURFACE HARDNESS BEFORE NITRIDING_____35_____HRC
PIN or PART_____PART_____

CORE HARDNESS AFTER NITRIDING____33_____HRC
PIN or PART_____PIN_____

RECEIVED
APR 26 2023
COLUMBIA GEAR

3691 PUBLISHERS DRIVE ROCKFORD IL 61109 Phone: (815) 873-1348 Fax: (815) 874-8764

857368

Flame Metals Processing Corp.
Shipping Ticket

Order No.: 857368
Ship Date: 3/9/2023

Sold To: 845
COLUMBIA GEAR
530 COUNTY ROAD 50
AVON MN 56310

Page 1 of 1
Thu - 3/9/2023

Ship To: 919739
COLUMBIA GEAR
530 COUNTY ROAD 50
AVON MN 56310

Purchase Order Number	Packing List No	Customer Job No	Carrier
273226-1	SO#: 263756		TT

Quantity	Part No. / Part Name / Part Description	Pounds
15	1793827020031SF Rev.D,Date:11/17/05(Q&T) Shaft, E4340 AQ Steel Harden and temper to 320-360 BHN (34-39 HRC) 1050° Minimum Temper.	170.85

Container Type	# Of Containers	Cust Cont Id	Container Type	# Of Containers	Cust Cont Id
Wire Basket	1	FLR			

Flame Metals is ISO 9001:2015 registered.

Pinion
AAP1793827-02003
SO 265369
PO 30019282-139
SN 2441 thru 2447

Shipped Complete

Quantity Shipped: 15
Pounds Shipped: 170.85

RECEIVED
MAR 09 2023
COLUMBIA GEAR

REVIEWED
MAR 13 2023
2737

Packing and Shipping Record (Results recorded on FMPC's signature copy and not on customers copy)				
Final Packing Date	Packer's Initials	Gross Weight	Piece Weight (Optional)	Tare Weight (Optional)
Packaging Description / Notes		Storage Location	Customer Notification Date / Method / Notes	

Order No.: 857368
Phone: 320-356-7301

Shipped Complete

Quantity Shipped: 15.00
Pounds Shipped: 170.85

Received By:

Date:

Sold To: COLUMBIA GEAR

Pinion
AAP1793827-02003
SO 265369
PO 30019282-139
SN 2441 thru 2447

Flame Metals Processing Corp.
Certification

Order No.: 857368
Date: 03/09/2023
Entry Date: 03/03/2023
Page: 1 of 1

To:
COLUMBIA GEAR
530 COUNTY ROAD 50

AVON MN 56310

Purchase Order No.: 273226-1
Packing List No.: SO#: 263756
Material: 4340

Quantity	Part Number / Part Name / Part Description	Pounds
15	1793827020031SF Rev.D,Date:11/17/05(Q&T) Shaft, E4340 AQ Steel Harden and temper to 320-360 BHN (34-39 HRC) 1050° Minimum Temper.	170.85

Insp. Type	Scale	Minimum	Maximum	Number	Other	Inspection ID#
Hardnss	HRC	53.	60.		. As Quench Hardness	
Hardnss	HRC	34.	39.		. Final As Tempered Surface Hard	

The undersigned, individually, and as the authorized representative of the contractor, warrants and represents that: To the best of our knowledge all the information supplied below is true and accurate. The certificate conforms to all requirements (including purchase orders, drawings and specifications); the inspection test results and analysis appearing herein are true and accurate; and this certificate is made for the purpose of reporting quality

Processed OK.

Surface Hardness = HRC:
37.3 to 37.7

David F. Hogue
03.09.2023

Mohamed P. Jalloh

Mohamed P.Jalloh
Quality Control Manager
Flame Metals Processing Corporation

Pinion
AAP1793827-02003
SO 265369
PO 30019282-139
SN 2441 thru 2447

Castle Metals®
A. M. Castle & Co.

PACKING SLIP/ CERTIFICATE OF CONFORMANCE

Shipment No:4670454

Ship From:	Sold To:	Ship To:	Deliver To:
JANESVILLE 3800 ENTERPRISE DRIVE JANESVILLE, WI 53546 USA	COLUMBIA GEAR CORP. 530 COUNTY ROAD 50 AVON, MN 56310 US	COLUMBIA GEAR CORP. 530 COUNTY ROAD 50 AVON, MN 56310 USA	COLUMBIA GEAR CORP. 530 COUNTY ROAD 50 AVON, MN 56310 US

Date Shipped	Inco Terms	Freight Terms	Carrier	BOL No
01-NOV-22	FCA AVON MN USA	Prepaid	TQ LOGISTICS	4670454-4

Shipment Details	Final Destination Branch - JVL

Order No	Line No	Item No	Description
1113043467	1	11041.MO	2.7500.RD.E4340.HR.AQ.ANN.ALLOY.MIN.R/R 16:1 CUT TO 15.30 IN (+ .0625/- .0000 IN) - BAR COLD SAW CUTTING SPECIFICATIONS: AISI E4340,AMS 2301,AMS 6415,AMS S-5000 COND C1,ASTM A322,UNS G43406

Purchase Order No	Part Number	Ordered Qty`	Invoice Qty
268675 LINE 1	YOUR ITEM NUMBER: 1793827020031SB	50.00 PCS	50.00 PCS

Details	2230600035

Delivery No.	Mill	Heat Number	Mech Id	PCS	Width (IN)	Length (IN)	Shipped Qty(LBS)
124592543	TIMKENSTEEL CORPORATION	X0796	A9604	50			1318.3473

These items are controlled by the U.S. Government and authorized for export only to the country of ultimate destination for use by the ultimate consignee or end-user(s) herein identified. They may not be resold, transferred, or otherwise disposed of, to any other country or to any person other than the authorized ultimate consignee or end-user(s), either in their original form or after being incorporated into other items, without first obtaining approval from the U.S. Government or as otherwise authorized by U.S. law and regulations.

We hereby certify the material covered by this certification conforms in accordance with the above specifications and has been found to meet the applicable requirements for the material, including any specifications forming a part of the description. Test reports are on file subject to examination. All claims for defective material are waived unless made in writing to A.M. Castle & Co. within 60 days of the shipment. Material cut to the correct size, or material cut to the customer's print cannot be returned for credit.

Reviewed by Authorized Castle Metals Representative: | Date: 11/1/22 | Name:

REVIEWED NOV 04 2022 2737

RECEIVED NOV 02 2022 COLUMBIA GEAR

Date Printed: 01-NOV-2022 04:27:49 PM

Pinion
AAP1793827-02003
SO 265369
PO 30019282-139
SN 2441 thru 2447

CERTIFICATE OF MATERIAL TEST REPORTS

H-A Industries A Division of A. M. Castle & Co. 4527 Columbia Avenue Hammond, IN 46327			Customer: A. M. Castle & Co. 1420 Kensington Road Suite 220 Oak Brook, IL 60523	
MANUFACTURER (MILL)		CUST. ORDER NO.		
TIMKENSTEEL CORPORATION				
IC	HEAT NO.	MECHANICAL ID	ORDER NO.	SHIP QUANTITY	DATE
11041	X0796	A9604	13158310	22516	10-OCT-22

DESCRIPTION OF MATERIAL

2.7500.RD.E4340.ALLOY.HR.ANN.AQ.AMS 6415.216.0000-288.0000

CHEMICAL ANALYSIS %

C	MN	P	S	SI	CU	NI	CR	MO	AL
.42	.78	.012	.007	.32	.22	1.76	.87	.26	.029

JOMINY HARDENABILITY Rc

1	2	3	4	5	6	7	8	9	10	11	12	13	14	15	16	18	20	22	24	26	28	30	32
											55						54						54

METALLURGICAL

MACROETCH S: 2 R: 1 C: 2	AMS 2301 F: 0 S: 0		USMCA YES	GRAIN SIZE 8	
	REDUCTION RATIO 31.5		FROM IC 32803		
COUNTRY OF MANUFACTURE United States	COUNTRY OF MELT US				

HEAT TREATMENT

					% LP ANNEAL	DECARB (In)	HRS	TEMP °F		
					85	.004	10.3	1520		

HARDNESS

Location	Type		Location	Type	
SURF	HBW	217	SURF	HBW	218
SURF	HBW	217	SURF	HBW	213
SURF	HBW	215			

CONFORMANT TO SPECIFICATIONS

AMS 6415U EXC. CONT LINE MARK
AMS 2301L
ASTM A322-13 (REAPPROVED 2018)
ASTM A304-20
AMS-S-5000 COND C1
ASME SA540 B23 (CHEMICAL ONLY)
SBB EMS-4 REV D
UNS# G43406

H-A INDUSTRIES CERTIFIES THAT APPROPRIATE INFORMATION IS TAKEN FROM TEST REPORTS FURNISHED TO US BY OUR SUPPLIER AND WHICH ARE ON FILE IN OUR OFFICE. H-A INDUSTRIES CERTIFIES THAT THE MATERIAL LISTED HEREIN HAS BEEN INSPECTED AND TESTED IN ACCORDANCE WITH METHODS PRESCRIBED IN THE GOVERNING SPECIFICATIONS. THE RESULTS OF INSPECTION AND TESTING CONFORM TO THE SPECIFICATIONS LISTED INCLUDING ASTM A370 LATEST REVISION AND EN 10204:2004 3.1.

H-A CERTIFIES THAT THE METAL WHICH IS THE SUBJECT OF THIS CERTIFICATION IS MERCURY FREE AND WAS NOT EXPOSED TO ANY RADIOACTIVE SOURCE.MATERIAL DOES NOT CONTAIN ANY POLYBROMINATED BIPHENYLS (PBB) OR POLYBROMINATED DIPHENYL ETHERS (PBDE). NO WELD OR WELD REPAIR WAS PERFORMED ON THIS MATERIAL.

THE RECORDING OF FALSE, FICTITIOUS OR FRAUDULENT STATEMENTS OR ENTRIES ON THIS DOCUMENT MAY BE PUNISHABLE AS A FELONY UNDER FEDERAL STATUTE.

NAME: JAN L. CARUSO

TITLE: MANAGER OF TECHNICAL SERVICES

SIGNATURE: Jan L. Caruso

32803

Steel Certificate of Test

1835 Dueber Ave. S.W.
Canton, Ohio 44706
ID #0562748-1

TIMKENSTEEL

8/11/2022

SOLD TO: A M Castle & Company
1420 Kensington Road
Suite 220
Oak Brook, IL 60523 USA

SHIP TO: H A Industries
4527 Columbia Avenue
Hammond, IN 46327 USA

Pinion
AAP1793827-02003
SO 265369
PO 30019282-139
SN 2441 thru 2447

Customer Order: 599608 32803 Customer Part Number: 32803
Mill Order: 21624-A (2284796) Heat Number(s): X0796

Description of Material

DIAMETER: 2.750 in (69.850 mm)
Shape: RD
Prod Type: BAR
Sales Type: 4340
Int Quality: ELECTRIC FURNACE-VACUUM DEGAS-AIRCRAFT
Condition: HOT ROLL

Specification

- A M CASTLE & COMPANY G43400-19 Rev. 38 07/28/2020 EXCEPT AS NOTED
- AMS 6415 Rev. U 12/07/2016 EXCEPT CONTINUOUS STENCIL & EXCEPT PARAGRAPH 3.2.1
- AMS 2301 Rev. L 05/19/2020
- AMS S-5000 Rev. A 03/01/2007 B1-CANCELLED AND SUPERCEDED BY AMS 6415 OR 6484
- EUROPEAN STANDARD EN 10204 12/17/2004 TYPE 3.1 INSPECTION CERTIFICATE
- AMS 2251 Rev. J 11/05/2018 EXCEPT AS NOTED
- AMS 2259 Rev. F 10/25/2017
- AMS 2370 Rev. L 06/20/2016
- ASME SA-540/SA-540M Rev. 2019 EDITION B23-FOR CHEMISTRY ONLY
- ASTM A322 Rev. 13 (Reapproved 2018) e1 09/01/2018
- ASTM A304 Rev. 20 07/01/2020 EXCEPT AS NOTED
- ASTM A29 / A29M Rev. 20 07/01/2020 EXCEPT AS NOTED

Chemistry Information

	%C	%Mn	%P	%S	%Si	%Cr	%Ni	%Mo	%Cu	%Al	%V	%As	%B	%Ca	%Cb
SPEC Ladle Min:	.38	.65			.15	.70	1.65	.20		.020					
SPEC Ladle Max:	.43	.80	.025	.025	.35	.90	2.00	.30	.35	.050					
X0796 Ladle:	.42	.78	.012	.007	.32	.87	1.76	.26	.22	.029	.006	.006	.0002	.0004	.003
X0796 C2B04:	.41	.78	.011	.007	.32	.86	1.80	.25	.21	.029	.006	.005	.0002	.0004	.002

	%Co	ppmH	%Pb	%Sb	%Sn	%Ti	%W	%Zr
SPEC Ladle Min:								
SPEC Ladle Max:		2.5						
X0796 Ladle:	.011	1.0	.0010	.001	.010	.002	.006	.001
X0796 C2B04:	.011		.0010	.001	.010	.002	.005	.001

Testing of elements performed at TimkenSteel Chemistry Labs except where noted.

Metallurgy Information

SPEC: Grain Size ASTM E112 SIZE 5/FINER
Heat X0796 SIZE: 8

When shipping document is attached it becomes part of this certification.

We certify the above materials have been inspected and tested in accordance with the methods prescribed in the governing specifications and consistent with our Standard Commercial Terms and Conditions for Sale, Manufacture, and Shipping, which are incorporated into and made part of this certification. The results of such inspections and tests conform with the applicable requirements including the purchase order, specification(s) and exception(s). This certificate or report shall not be reproduced except in full, without the written approval of TimkenSteel Corporation.

Notarized: _____ by Ashley Langdon
NOTARY PUBLIC

Ashley Langdon, Met Lab Technician

Pinion
AAP1793827-02003
SO 265369
PO 30019282-139
SN 2441 thru 2447

Steel Certificate of Test

1835 Dueber Ave. S.W.
Canton, Ohio 44706

TIMKENSTEEL

ID #0562748-1

8/11/2022

Customer Order: 599608 32803 Customer Part Number: 32803
Mill Order: 21624-A (2284796) Heat Number(s): X0796

Metallurgy Information

SPEC: Decarb E1077 LEVEL 0.035 Max UOM IN

Heat	Sample	LEVEL	UOM
X0796	762410	0.004	IN

SPEC: Jominy English NORMALIZING TEMPERATURE 1600 F / 871 C SAMPLE TYPE CAST E4340H

Location:	1	2	3	4	5	6	7	8	9	10	11	12	13	14	15	16	18	20	22	24	26	28	30	32	36	40
SPEC Min:	53	53	53	53	53	53	53	53	53	53	53	53	52	52	52	51	51	50	49	48	47	46	45	45		
SPEC Max:	60	60	60	60	60	60	60	60	60	60	60	60	60	59	59	59	58	58	58	57	57	57	57	57		
X0796 ACF1:	57	57	57	56	56	56	55	55	55	55	55	55	55	55	55	55	55	54	54	54	54	54	54	54	54	53

SPEC: Mag Std (AMS 2301) FREQUENCY 0.340 Max SEVERITY 0.250 Max

Heat X0796 AMS 2301 FREQUENCY: 0.000 SEVERITY: 0.000

All Hardness and Tensile testing performed at TimkenSteel Metallurgical Lab except where noted.

Heat X0796 Melt Source: USA
Manufacturing: USA
Heat X0796 - Strand Cast Process
REDUCTION RATIO - 31.5:1

MATERIAL IS ALSO DESIGNATED AS UNS# G43406

DFARS 252.225-7008 AND 252.225-7009 COMPLIANT (FORMERLY DFARS 252.225-7014)

Macroetch equal to or better than S2 R1 C2 in accordance with ASTM E381

The recording of false, fictitious or fraudulent statements or entries on this document may be punishable as a felony under Federal Statute Title 18, Chapter 47.

TimkenSteel certifies that there is no mercury or radio-active material used in the melting or processing.

USMCA - YES

MATERIAL WAS ELECTRIC FURNACE MELTED, VACUUM DEGASSED AND LADLE REFINED

No welding of this material has occurred.

In reference to Section 1502 ("Conflict Minerals") of the Dodd-Frank Wall Street Reform and Consumer Protection Act, no tantalum, tin, tungsten or gold was intentionally added to this material.

Initial:

AUG 18 2022

ENTERED

Thrust Collar
AAP1793827-02003
SO 265369
PO 30019282-139
SN 2441 thru 2447

DIAMOND HEAT TREAT LLC
Shipping Ticket

Order No.: 468611
Ship Date: 12/21/2022

Sold To: 525
COLUMBIA GEAR CORPORATION
530 COUNTY ROAD 50

AVON MN 56310-e

Ship To: 478765
COLUMBIA GEAR CORPORATION
530 COUNTY ROAD 50

AVON MN 56310-e

Purchase Order Number	Packing List No	Customer Job No	Route	Carrier
270739 LINE 2	190000,190001	262492	Columbia Gea	UPS/HOLLAND

Quantity	Part No. / Part Name / Part Description	Pounds
	262496	
	1793897-2101	
	REV 01 INGDA	

Containers	Container Type	Quantity	Weight
1	SM. CRATE	66	85
1	SM. CRATE	30	39

PHONE: (815) 873-1348

Shipped Complete

Quantity Shipped: 96

Pounds Shipped: 124.00

STATEMENT OF LIMITED LIABILITY-All work is accepted subject to the following conditions: It is recognized that even after employing all the scientific methods known to DHT, hazards still remain in metal treating, THEREFORE DHT'S LIABILITY SHALL NOT EXCEED THE AMOUNT OF OUR CHARGES FOR THE WORK DONE ON ANY MATERIAL. The customer by contracting for metal treatment agrees to accept the limits of liability as expressed in this Statement to the exclusion of any and all provisions as to liability on the customer's own invoices, purchase orders or other documents.THE STATEMENT OF LIABILITY MENTIONED ABOVE IS SPECIFICALLY IN LIEU OF ANY EXPRESSED OR IMPLIED WARRANTY, INCLUDING ANY IMPLIED WARRANTY OF MERCHANTABILITY OR FITNESS AND OF ANY OTHER SUCH OBLIGATION ON THE PART OF THE TREATER. No claims for shortage in weight or count will be entertained unless presented within seven (7) working days after receipt of materials by customer. No claim will be made or allowed for shrinkage, expansion, deformity, or rupture of material in treating or straightening, nor for rupture caused by or occurring during subsequent grinding. Whenever DHT is given material with detailed instructions as to treatment, DHT's responsibility shall end with the carrying out of these instructions. Failure by a customer to indicate plainly and correctly the kind of material (i.e. proper designation) to be treated, shall cause an extra charge to be made to cover any additional expense incurred as a result thereof. There will be no liability on DHT for any special, indirect or consequential damages arising from any reason whatsoever, including but not limited to loss of profits, loss of production, recall or any other losses, expenses or liabilities allegedly occasioned by the work performed on the part of DHT. It shall be the duty of the customer to inspect the merchandise immediately upon its return, and in any event claims must be reported prior to the time that any further processing, assembling or any other work is undertaken. DHT'S LIABILITY TO CUSTOMER SHALL CEASE ONCE ANY FURTHER PROCESSING, ASSEMBLING OR ANY OTHER WORK HAS BEEN UNDERTAKEN ON SAID MATERIAL! No agent or representative is authorized to alter the above conditions, except in writing duly signed by an officer of DHT.

RECEIVED
DEC 22 2022
COLUMBIA GEAR

Order No.: 468611

Shipped Complete

Quantity Shipped: 96.00

Pounds Shipped: 124.00

Received By:

Date:

Sold To: COLUMBIA GEAR CORPORATION

Shipped ON: 12/21/2022

DIAMOND
HEAT TREAT, INC.

DIAMOND HEAT TREAT LLC
Certification

Order No.: 468611
Date: 12/20/2022
Entry Date: 12/13/2022

To:
COLUMBIA GEAR CORPORATION
530 COUNTY ROAD 50

AVON MN 56310-e

Purchase Order No.: 270739 LINE 2
Packing List No.: 190000,190001
Material: 4140

We are pleased to provide you with the following Certification

Quantity	Part Number / Part Name / Part Description		Pounds
66	1793897-2101 REV 01 AGMA 923 GRADE 1	Thrust Collar AAP1793827-02003 SO 265369 PO 30019282-139 SN 2441 thru 2447	85

Insp. Type	Scale	Minimum	Maximum	Number	Other
Customer Requirements:					
EFF CASE	THOUS.	.024			
15N	15N	84.	88.		

Results:

PIN MATERIAL USED____4140_____
HARDNESS TRAVERSE - PIN or PART_____PIN___

MEASURED ON A 500 GRAM LOAD
DEPTH-KNOOP
.002-608
.004-601
.006-599
.008-579
.010-570
.012-551
.014-523
.016-484
.018-468
.020-460
.024-423
.026-418

SPALLING_____CR1_____

DIRECT HRC_____45___HRC

WHITE LAYER_____.0006_____WL

SURFACE HARDNESS BEFORE NITRIDING_____32_____HRC
PIN or PART____PART_____

CORE HARDNESS AFTER NITRIDING_____30_____HRC
PIN or PART____PIN_____

DIAMOND
HEAT TREAT, INC.

DIAMOND HEAT TREAT LLC
Certification

Order No.: 468611
Date: 12/20/2022
Entry Date: 12/13/2022

To:
COLUMBIA GEAR CORPORATION
530 COUNTY ROAD 50

AVON MN 56310-e

Purchase Order No.: 270739 LINE 1
Packing List No.: 190000,190001
Material: 4140

_421_____KNOOP AT ___.024____ SURFACE HARDNESS_____84_____HR15N
CODE USED _____A1_____ MATRIX MICROSTRUCTURE--- VISUAL 500X NORMAL

STATEMENT OF LIMITED LIABILITY-All work is accepted subject to the following conditions: It is recognized that even after employing all the scientific methods known to DHT, hazards still remain in metal treating, THEREFORE DHT'S LIABILITY SHALL NOT EXCEED THE AMOUNT OF OUR CHARGES FOR THE WORK DONE ON ANY MATERIAL. The customer by contracting for metal treatment agrees to accept the limits of liability as expressed in this Statement to the exclusion of any and all provisions as to liability on the customer's own invoices, purchase orders or other documents.THE STATEMENT OF LIABILITY MENTIONED ABOVE IS SPECIFICALLY IN LIEU OF ANY EXPRESSED OR IMPLIED WARRANTY, INCLUDING ANY IMPLIED WARRANTY OF MERCHANTABILITY OR FITNESS AND OF ANY OTHER SUCH OBLIGATION ON THE PART OF THE TREATER. No claims for shortage in weight or count will be entertained unless presented within seven (7) working days after receipt of materials by customer. No claim will be made or allowed for shrinkage, expansion, deformity, or rupture of material in treating or straightening, nor for rupture caused by or occurring during subsequent grinding. Whenever DHT is given material with detailed instructions as to treatment, DHT's responsibility shall end with the carrying out of these instructions. Failure by a customer to indicate plainly and correctly the kind of material (i.e. proper designation) to be treated, shall cause an extra charge to be made to cover any additional expense incurred as a result thereof. There will be no liability on DHT for any special, indirect or consequential damages arising from any reason whatsoever, including but not limited to loss of profits, loss of production, recall or any other losses, expenses or liabilities allegedly occasioned by the work performed on the part of DHT. It shall be the duty of the customer to inspect the merchandise immediately upon its return, and in any event claims must be reported prior to the time that any further processing, assembling or any other work is undertaken. DHT'S LIABILITY TO CUSTOMER SHALL CEASE ONCE ANY FURTHER PROCESSING, ASSEMBLING OR ANY OTHER WORK HAS BEEN UNDERTAKEN ON SAID MATERIAL! No agent or representative is authorized to alter the above conditions, except in writing duly signed by an officer of DHT.

Thrust Collar
AAP1793827-02003
SO 265369
PO 30019282-139
SN 2441 thru 2447

Victor Enriquez Rivero
Lab Technician
DIAMOND HEAT TREAT INC.

847260

Flame Metals Processing Corp.
Shipping Ticket

Order No.: 847260
Ship Date: 11/18/2022

Sold To: 845
COLUMBIA GEAR
530 COUNTY ROAD 50
AVON MN 56310

Ship To: 908771
COLUMBIA GEAR
530 COUNTY ROAD 50
AVON MN 56310

Fri - 11/18/2022

Purchase Order Number	Packing List No	Customer Job No	Carrier
270072-1 -2	SO# 262492 262496		

Quantity	Part No. / Part Name / Part Description	Pounds
96	1793897-2101 Rev. 01, Date: 2/21/00(2IQ) Collar, Thrust, E4140-AQ Steel Harden & Temper to HRC 32-36. 1050'F Min. Temper Required. INCOA	414.24

Serial Number	Other Number
269421	

Container Type	# Of Containers	Cust Cont Id	Container Type	# Of Containers	Cust Cont Id
Wood Box	1	Outside			

Flame Metals is ISO 9001:2015 registered.

Shipped Complete

Quantity Shipped: 96
Pounds Shipped: 414.24

Ln. 1 30
Ln. 2 66

Thrust Collar
AAP1793827-02003
SO 265369
PO 30019282-139
SN 2441 thru 2447

RECEIVED
NOV 18 2022
COLUMBIA GEAR

REVIEWED
NOV 29 2022
2737

Packing and Shipping Record (Results recorded on FMPC's signature copy and not on customers copy)				
Final Packing Date	Packer's Initials	Gross Weight	Piece Weight (Optional)	Tare Weight (Optional)
Packaging Description / Notes		Storage Location	Customer Notification Date / Method / Notes	



Order No.: 847260
Phone: 320-356-7301

Shipped Complete

Quantity Shipped: 96.00
Pounds Shipped: 414.24

Received By:

Date:

Sold To: COLUMBIA GEAR

Thrust Collar
AAP1793827-02003
SO 265369
PO 30019282-139
SN 2441 thru 2447

Flame Metals Processing Corp.
Certification

Order No.: 847260
Date: 11/18/2022
Entry Date: 11/16/2022

To:
COLUMBIA GEAR
530 COUNTY ROAD 50

AVON MN 56310

Purchase Order No.: 270072-1
Packing List No.: SO# 262492
Material: 4140

We are pleased to provide you with the following Certification

Quantity	Part Number / Part Name / Part Description	Pounds
96	1793897-2101 Rev. 01, Date: 2/21/00(2IQ) Collar, Thrust, E4140-AQ Steel Harden & Temper to HRC 32-36. 1050'F Min. Temper Required.	414.24

Serial Numbers / Other Numbers: 269421.

Insp. Type	Scale	Minimum	Maximum	Number	Other	Inspection ID#
Hardnss	HRC	.	.	.	As Quench Hardness	
Hardnss	HRC	32.	36.	.	Final As Tempered Surface Hard	

The undersigned, individually, and as the authorized representative of the contractor, warrants and represents that: To the best of our knowledge all the information supplied below is true and accurate. The certificate conforms to all requirements (including purchase orders, drawings, specifications & as applicable per quote); the inspection test results and analyses appearing herein are true and accurate; and this certificate is made for the purpose of reporting quality findings.

Processed OK

As quench hardness: 53.7 HRC
Final surface hardness: 32.8, 33.1, 33.1, 35.0 HRC

Lindsey King 11/18/2022

Mohamed P. Jalloh

Mohamed P.Jalloh
Quality Control Manager
Flame Metals Processing Corporation

12450 Ironwood Circle Rogers MN 55374 **Phone:** (763) 428-2596 **Fax:** (763) 428-3689

Thrust Collar
AAP1793827-02003
SO 265369
PO 30019282-139
SN 2441 thru 2447

Castle Metals®

A. M. Castle & Co.

PACKING SLIP/ CERTIFICATE OF CONFORMANCE

Shipment No:4676272

Ship From:	Sold To:	Ship To:	Deliver To:
JANESVILLE 3800 ENTERPRISE DRIVE JANESVILLE, WI 53546 USA	COLUMBIA GEAR CORP. 530 COUNTY ROAD 50 AVON, MN 56310 US	COLUMBIA GEAR CORP. FLAME METALS 12450 IRONWOOD CIRCLE ROGERS, MN 55374 USA	COLUMBIA GEAR CORP. FLAME METALS 12450 IRONWOOD CIRCLE ROGERS, MN 55374 US

Date Shipped	Inco Terms	Freight Terms	Carrier	BOL No
11-NOV-22	FCA ROGERS MN USA	Prepaid	TQ LOGISTICS	4676272-4

Shipment Details	Final Destination Branch - JVL

Order No	Line No	Item No	Description
1113050503	1	16884.MO	3.5000.RD.E4140.HR.AQ.ANN.ALLOY.AMS.6382 CUT TO 1.1250 IN (+ .0625/- .0000 IN) - BAR COLD SAW CUTTING SPECIFICATIONS: AISI 4140,AMS 2301,AMS 6382,ASTM A29,ASTM A322,UNS G41400

Purchase Order No	Part Number	Ordered Qty	Invoice Qty
269421 LINE 1	YOUR ITEM NUMBER: 17938972101SB	96.00 PCS	96.00 PCS

Details 2231800063

Delivery No.	Mill	Heat Number	Mech Id	PCS	Width (IN)	Length (IN)	Shipped Qty(LBS)
124614488	TIMKENSTEEL CORPORATION	Y9124	A9315	96			299.9200

These items are controlled by the U.S. Government and authorized for export only to the country of ultimate destination for use by the ultimate consignee or end-user(s) herein identified. They may not be resold, transferred, or otherwise disposed of, to any other country or to any person other than the authorized ultimate consignee or end-user(s), either in their original form or after being incorporated into other items, without first obtaining approval from the U.S. Government or as otherwise authorized by U.S. law and regulations.

We hereby certify the material covered by this certification conforms in accordance with the above specifications and has been found to meet the applicable requirements for the material, including any specifications forming a part of the description. Test reports are on file subject to examination. All claims for defective material are waived unless made in writing to A.M. Castle & Co. within 60 days of the shipment. Material cut to the correct size, or material cut by the customer cannot be returned for credit.

Reviewed by Authorized Castle Metals Representative: Date: 11/11/22 Name:

Date Printed: 11-NOV-2022 04:53:11 PM

Thrust Collar
AAP1793827-02003
SO 265369
PO 30019282-139
SN 2441 thru 2447

CERTIFICATE OF MATERIAL TEST REPORTS

H-A Industries
A Division of A. M. Castle & Co.
4527 Columbia Avenue
Hammond, IN 46327

Customer:
A. M. Castle & Co.
1420 Kensington Road
Suite 220
Oak Brook, IL 60523

MANUFACTURER (MILL)			CUST. ORDER NO.		
TIMKENSTEEL CORPORATION					
IC	HEAT NO.	MECHANICAL ID	ORDER NO.	SHIP QUANTITY	DATE
16884	Y9124	A9315	13065222	9254	22-JUN-22

DESCRIPTION OF MATERIAL

3.5000.RD.E4140.ALLOY.HR ANN.AQ.AMS 6382,216.0000-288.0000

CHEMICAL ANALYSIS %

C	MN	P	S	SI	CU	NI	CR	MO	AL
.42	.94	.012	.023	.24	.26	.14	.92	.20	.024

JOMINY HARDENABILITY Rc

1	2	3	4	5	6	7	8	9	10	11	12	13	14	15	16	18	20	22	24	26	28	30	32
54	53	53	53	52	52	51	49	47	47		45		43		41	38	37		36		33		32

METALLURGICAL

MACROETCH S: 2 R: 1 C: 2	AMS 2301 F: 0 S: 0			GRAIN SIZE 5	
	REDUCTION RATIO 44.9		FROM IC 32544		
COUNTRY OF MANUFACTURE United States	COUNTRY OF MELT US				

HEAT TREATMENT

% LP ANNEAL	DECARB (In)	HRS	TEMP °F
80	.002	5.7	1570

HARDNESS

Location	Type		Location	Type	
SURF	HBW	183	SURF	HBW	179
SURF	HBW	170	SURF	HBW	174
SURF	HBW	181			

CONFORMANT TO SPECIFICATIONS

AMS 6382R
ASTM A29-20
ASTM A304-20
ASTM A322-13 (REAPPROVED 2018)
AMS 2301L
UNS# G41400

H-A INDUSTRIES CERTIFIES THAT APPROPRIATE INFORMATION IS TAKEN FROM TEST REPORTS FURNISHED TO US BY OUR SUPPLIER AND WHICH ARE ON FILE IN OUR OFFICE. H-A INDUSTRIES CERTIFIES THAT THE MATERIAL LISTED HEREIN HAS BEEN INSPECTED AND TESTED IN ACCORDANCE WITH METHODS PRESCRIBED IN THE GOVERNING SPECIFICATIONS. THE RESULTS OF INSPECTION AND TESTING CONFORM TO THE SPECIFICATIONS LISTED INCLUDING ASTM A370 LATEST REVISION AND EN 10204:2004 3.1

H-A CERTIFIES THAT THE METAL WHICH IS THE SUBJECT OF THIS CERTIFICATION IS MERCURY FREE AND WAS NOT EXPOSED TO ANY RADIOACTIVE SOURCE MATERIAL DOES NOT CONTAIN ANY POLYBROMINATED BIPHENYLS (PBB) OR POLYBROMINATED DIPHENYL ETHERS (PBDE) NO WELD OR WELD REPAIR WAS PERFORMED ON THIS MATERIAL.

THE RECORDING OF FALSE, FICTITIOUS OR FRAUDULENT STATEMENTS OR ENTRIES ON THIS DOCUMENT MAY BE PUNISHABLE AS A FELONY UNDER FEDERAL STATUTE.

NAME: JAN L. CARUSO
TITLE: MANAGER OF TECHNICAL SERVICES
SIGNATURE: Jan L. Caruso

Thrust Collar
AAP1793827-02003
SO 265369
PO 30019282-139
SN 2441 thru 2447

Steel Certificate of Test

1835 Dueber Ave. S.W.
Canton, Ohio 44706
ID #0556261-1

TIMKEN STEEL

4/25/2022

SOLD TO:
A M Castle & Company
1420 Kensington Road
Suite 220
Oak Brook, IL 60523 USA

SHIP TO:
H A Industries
4527 Columbia Avenue
Hammond, IN 46327 USA

Customer Order: 593626 32544
Mill Order: 17261-D (2277541)
Customer Part Number: 32544
Heat Number(s): Y9124

Description of Material

DIAMETER: 3.500 in (88.900 mm)
Shape: RD
Prod Type: BAR
Sales Type: 4140
Int Quality: ELECTRIC FURNACE-VACUUM DEGAS-AIRCRAFT
Condition: HOT ROLL

Specification

- A M CASTLE & COMPANY G41400-208 Rev. 28 07/22/2020 EXCEPT AS NOTED
- AMS 6382 Rev. R 08/14/2018 EXCEPT ANNEAL AND HARDNESS
- AMS 2301 Rev. L 05/19/2020
- EUROPEAN STANDARD EN 10204 12/17/2004 TYPE 3.1 INSPECTION CERTIFICATE
- AMS 2259 Rev. F 10/25/2017
- AMS 2251 Rev. J 11/05/2018 EXCEPT AS NOTED
- AMS 2370 Rev. L 06/20/2015
- ASTM A322 Rev. 13 (Reapproved 2018) e1 09/01/2018
- ASTM A304 Rev. 20 07/01/2020 EXCEPT AS NOTED
- ASTM A29 / A29M Rev. 20 07/01/2020 EXCEPT AS NOTED

Chemistry Information

	%C	%Mn	%P	%S	%Si	%Cr	%Ni	%Mo	%Cu	%Al	%V	%As	%B	%Ca	%Cb
SPEC Ladle Min:	.38	.75			.20	.80		.15		.020					
SPEC Ladle Max:	.43	1.00	.025	.025	.35	1.10	.25	.25	.35	.050					
Y9124 Ladle:	.42	.94	.012	.023	.24	.92	.14	.20	.26	.024	.005	.006	.0002	.0002	.004
Y9124 C2T04:	.42	.94	.012	.022	.23	.92	.13	.20	.26	.024	.005	.006	.0002	.0001	.003

	%Co	ppmH	%Pb	%Sb	%Sn	%Ti	%W	%Zr
SPEC Ladle Min:								
SPEC Ladle Max:		2.5						
Y9124 Ladle:	.009	1.0	.0010	.002	.012	.002	.005	.002
Y9124 C2T04:	.009		.0010	.001	.013	.002	.005	.002

Testing of elements performed at TimkenSteel Chemistry Labs except where noted.

Metallurgy Information

SPEC: Grain Size ASTM E112 SIZE 5/FINER
5/FINER
GRAIN SIZE OF 5/FINER BASED UPON ALUMINUM CONTENT

When shipping document is attached it becomes part of this certification.

We certify the above materials have been inspected and tested in accordance with the methods prescribed in the governing specifications and consistent with our Standard Commercial Terms and Conditions for Sale, Manufacture, and Shipping, which are incorporated into and made part of this certification. The results of such inspections and tests conform with the applicable requirements including the purchase order, specification(s) and exception(s). This certificate or report shall not be reproduced except in full, without the written approval of TimkenSteel Corporation.

Notarized: _____ by Ashley Langdon
NOTARY PUBLIC

Ashley Langdon, Met Lab Technician

Thrust Collar
AAP1793827-02003
SO 265369
PO 30019282-139
SN 2441 thru 2447

Steel Certificate of Test

1835 Dueber Ave. S.W.
Canton, Ohio 44706

TIMKEN STEEL

ID #0556261-1 Page 1 of 1 4/25/2022

Customer Order: 593626 32544 Customer Part Number: 32544
Mill Order: 17261-D (2277541) Heat Number(s): Y9124

Metallurgy Information

SPEC: Decarb E1077 LEVEL 0.045 Max UOM IN

Heat	Sample	LEVEL	UOM
Y9124	761659	0.004	IN

SPEC: Comby English AUSTENITIZING TEMPERATURE 1550 F / 843 C NORMALIZING TEMPERATURE 1700 F / 927 C
SAMPLE TYPE CAST 4140H

Location:	1	2	3	4	5	6	7	8	9	10	11	12	13	14	15	16	18	20	22	24	26	28	30	32	36	40
SPEC Min:	53	55	52	51	52	50	48	47	44	42	40	39	38	37	36	35	34	33	33	32	32	31	31	30		
SPEC Max:	60	60	60	59	59	58	56	57	57	56	56	55	55	54	54	53	52	51	49	48	47	46	45	44		
Y9124 ACF1:	54	53	53	53	52	52	51	49	47	47	46	45	44	43	42	41	38	37	36	36	35	33	32	32	31	31

SPEC: Mag Std (AMS 2301) FREQUENCY 0.340 Max SEVERITY 0.150 Max
Heat Y9124 AMS 2301 FREQUENCY: 0.000 SEVERITY: 0.000
All Hardness and Tensile testing performed at TimkenSteel Metallurgical Lab except where noted.

Heat Y9124 Melt Source: USA
Manufacturing: USA
Heat Y9124 - Strand Cast Process
REDUCTION RATIO - 44.9:1

MATERIAL IS ALSO DESIGNATED AS UNS# G41400

DFARS 252.225-7008 AND 252.225-7009 COMPLIANT (FORMERLY DFARS 252.225-7014)

Macroetch equal to or better than S2 R1 C2 in accordance with ASTM E381

The recording of false, fictitious or fraudulent statements or entries on this document may be punishable as a felony under Federal Statute Title 18, Chapter 47.

TimkenSteel certifies that there is no mercury or radio-active material used in the melting or processing.

Material melted and produced in the USA

USMCA - YES

MATERIAL WAS ELECTRIC FURNACE MELTED, VACUUM DEGASSED AND LADLE REFINED

No welding of this material has occurred.

In reference to Section 1502 ("Conflict Minerals") of the Dodd-Frank Wall Street Reform and Consumer Protection Act, no tantalum, tin, tungsten or gold was intentionally added to this material.

Initial: BJ

MAY 04 2022

ENTERED

Columbia Gear Corporation

A SUBSIDIARY OF INDUSTRIAL MANUFACTURING COMPANY

Certificate of Compliance

I, the undersigned, hereby confirm that the shipment described below meets all of the requirements according to specifications and that the said parts have been manufactured in accordance with the latest requirements. All pertaining records will be on file at Columbia Gear for your review.

Customer Name:	Ingersoll Rand		
Purchase Order Number:	30019282-142		
Part Number & Revision:	AAP1793827-02002		
Part Description:	PINION ASSY		
Quantity:	6	***Date:***	July 28, 2023
Serial Numbers:	Assm 266284 - SN 2293, 2295 thru 2298		

Columbia Gear Corporation

Sara Peters
Signature

QA Administrative Assistant
Title

Pinion
AAP1793827-02002
SO 266284
PO 30019282-142
SN 2293, 2295 thru 2299

DIAMOND HEAT TREAT LLC

Shipping Ticket

Order No.: 473269
Ship Date: 6/15/2023

Sold To: 525
COLUMBIA GEAR CORPORATION
530 COUNTY ROAD 50
AVON MN 56310-e

Ship To: 483560
COLUMBIA GEAR CORPORATION
530 COUNTY ROAD 50
AVON MN 56310-e

Purchase Order Number	Packing List No	Customer Job No	Route	Carrier
276127-1	192195	264959	Columbia Gea	UPS/HOLLAND

Quantity	Part No. / Part Name / Part Description	Pounds
	1793827-020021 SO# 264959 OP#110 REV E	

Container Type	# Of Containers	Cust Cont Id	Container Type	# Of Containers	Cust Cont Id
WIRE BASKET	1	247206			

PHONE: (815) 873-1348

Shipped Complete

Quantity Shipped: 29
Pounds Shipped: 145.00

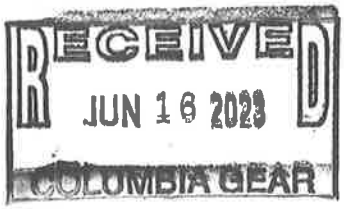

Order No.: 473269

Shipped Complete

Quantity Shipped: 29.00
Pounds Shipped: 145.00

Received By: _____ **Date:** _____

Sold To: COLUMBIA GEAR CORPORATION

Shipped ON: 06/15/2023

DIAMOND HEAT TREAT, INC.

DIAMOND HEAT TREAT LLC
Certification

Order No.: 473269
Date: 06/15/2023
Entry Date: 06/02/2023

To:
COLUMBIA GEAR CORPORATION
530 COUNTY ROAD 50

AVON MN 56310-e

Purchase Order No.: 276127-1
Packing List No.: 192195
Material: 4340

We are pleased to provide you with the following Certification

Quantity	Part Number / Part Name / Part Description	Pounds
29	1793827-020021 SO# 264959 OP#110 REV E AGMA 923 GRADE 1 Pinion AAP1793827-02002 SO 266284 PO 30019282-142 SN 2293, 2295 thru 2299	292

Insp. Type	Scale	Minimum	Maximum	Number	Other
Customer Requirements:					
EFF CASE THOUS.		.024			
15N	15N	84.	88.		

Results:

PIN MATERIAL USED____4340_____
HARDNESS TRAVERSE - PIN or PART__PIN_____

MEASURED ON A 500 GRAM LOAD
DEPTH-KNOOP
.002-613
.004-599
.006-585
.008-543
.010-518
.012-510
.014-518
.016-461
.018-465
.020-460
.022-473
.024-461
.026-460

SPALLING_____CR1

DIRECT HRC____35____HRC

WHITE LAYER____.0005-.0007"_____WL

SURFACE HARDNESS BEFORE NITRIDING_____35_____HRC
PIN or PART____PART_____

CORE HARDNESS AFTER NITRIDING____34_____HRC
PIN or PART_____PIN_____

3691 PUBLISHERS DRIVE ROCKFORD IL 61109 Phone: (815) 873-1348 **Fax:** (815) 874-8764

DIAMOND HEAT TREAT, INC.

DIAMOND HEAT TREAT LLC
Certification

Order No.: 473269
Date: 06/15/2023
Entry Date: 06/02/2023

To:
COLUMBIA GEAR CORPORATION
530 COUNTY ROAD 50

AVON MN 56310-e

Purchase Order No.: 276127-1
Packing List No.: 192195
1 **Material:** 4340

.027-421
.028-411

Pinion
AAP1793827-02002
SO 266284
PO 30019282-142
SN 2293, 2295 thru 2299

___421 KNOOP AT ___.027"____
CODE USED ____NITRIDE_____

SURFACE HARDNESS____86_____HR15N
MATRIX MICROSTRUCTURE--- VISUAL 500X NORMAL

STATEMENT OF LIMITED LIABILITY-All work is accepted subject to the following conditions: It is recognized that even after employing all the scientific methods known to DHT, hazards still remain in metal treating. THEREFORE DHT'S LIABILITY SHALL NOT EXCEED THE AMOUNT OF OUR CHARGES FOR THE WORK DONE ON ANY MATERIAL. The customer by contracting for metal treatment agrees to accept the limits of liability as expressed in this Statement to the exclusion of any and all provisions as to liability on the customer's own invoices, purchase orders or other documents.THE STATEMENT OF LIABILITY MENTIONED ABOVE IS SPECIFICALLY IN LIEU OF ANY EXPRESSED OR IMPLIED WARRANTY, INCLUDING ANY IMPLIED WARRANTY OF MERCHANTABILITY OR FITNESS AND OF ANY OTHER SUCH OBLIGATION ON THE PART OF THE TREATER. No claims for shortage in weight or count will be entertained unless presented within seven (7) working days after receipt of materials by customer. No claim will be made or allowed for shrinkage, expansion, deformity, or rupture of material in treating or straightening, nor for rupture caused by or occurring during subsequent grinding. Whenever DHT is given material with detailed instructions as to treatment, DHT's responsibility shall end with the carrying out of these instructions. Failure by a customer to indicate plainly and correctly the kind of material (i.e. proper designation) to be treated, shall cause an extra charge to be made to cover any additional expense incurred as a result thereof. There will be no liability on DHT for any special, indirect or consequential damages arising from any reason whatsoever, including but not limited to loss of profits, loss of production, recall or any other losses, expenses or liabilities allegedly occasioned by the work performed on the part of DHT. It shall be the duty of the customer to inspect the merchandise immediately upon its return, and in any event claims must be reported prior to the time that any further processing, assembling or any other work is undertaken. DHT'S LIABILITY TO CUSTOMER SHALL CEASE ONCE ANY FURTHER PROCESSING, ASSEMBLING OR ANY OTHER WORK HAS BEEN UNDERTAKEN ON SAID MATERIAL. No agent or representative is authorized to alter the above conditions, except in writing duly signed by an officer of DHT.

Katie Ridenour
Lab Technician
DIAMOND HEAT TREAT INC.

861253

Flame Metals Processing Corp.

Shipping Ticket

Order No.: 861253
Ship Date: 4/20/2023

Sold To: 845
COLUMBIA GEAR
530 COUNTY ROAD 50
AVON MN 56310

Page 1 of 1
Thu - 4/20/2023

Ship To: 924428
COLUMBIA GEAR
530 COUNTY ROAD 50
AVON MN 56310

Purchase Order Number	Packing List No	Customer Job No	Carrier
274350-1	SO# 264284		

Quantity	Part No. / Part Name / Part Description	Pounds
31	1793827020021SF Rev.E,Date 1/6/07(Q&T2) Shaft, E4340 AQ Steel Harden & Temper to 320-360 BHN (HRC 34 to 39) Per CG Spec 7.4.3-02	233.12

Container Type	# Of Containers	Cust Cont Id	Container Type	# Of Containers	Cust Cont Id
Wire Basket	1				

Flame Metals is ISO 9001:2015 registered.

RECEIVED
APR 21 2023
COLUMBIA GEAR

Shipped Complete

Pinion
AAP1793827-02002
SO 266284
PO 30019282-142
SN 2293, 2295 thru 2299

Quantity Shipped: 31
Pounds Shipped: 233.12

Packing and Shipping Record (Results recorded on FMPC's signature copy and not on customers copy)				
Final Packing Date	Packer's Initials	Gross Weight	Piece Weight (Optional)	Tare Weight (Optional)
Packaging Description / Notes		Storage Location	Customer Notification Date / Method / Notes	



Order No.: 861253
Phone: 320-356-7301

Shipped Complete

Quantity Shipped: 31.00
Pounds Shipped: 233.12

Received By:

Date:

Sold To: COLUMBIA GEAR

Pinion
AAP1793827-02002
SO 266284
PO 30019282-142
SN 2293, 2295 thru 2299

Flame Metals Processing Corp.
Certification

Order No.: 861253
Date: 04/20/2023
Entry Date: 04/10/2023

To:
COLUMBIA GEAR
530 COUNTY ROAD 50

AVON MN 56310

Purchase Order No.: 274350-1
Packing List No.: SO# 264284
Material: 4340

Quantity	Part Number / Part Name / Part Description	Pounds
31	1793827020021SF Rev.E,Date 1/6/07(Q&T2) Shaft, E4340 AQ Steel Harden & Temper to 320-360 BHN (HRC 34 to 39) Per CG Spec 7.4.3-02	233.12

CG Spec 7.4.3-02

Insp. Type	Scale	Minimum	Maximum	Number	Other	Inspection ID#
Hardnss	HRC				As Quench Hardness	
Hardnss	HRC	34.	39.		Final As Tempered Surface Hard	

The undersigned, individually, and as the authorized representative of the contractor, warrants and represents that: To the best of our knowledge all the information supplied below is true and accurate. The certificate conforms to all requirements (including purchase orders, drawings and specifications); the inspection test results and analysis appearing herein are true and accurate; and this certificate is made for the purpose of reporting quality

Process Ok:
Furnaces used: austenitzed in #231
As Quenched Hardness: 53.8 HRC

Tempered in unit#222 Final tempering temperature: 1050F

Final Hardness on machined/grind surfaces: 34.2 to 34.5
Q.C tech: Jesse Mandujano Date: 04/20/2023

Mohamed P. Jalloh

Mohamed P.Jalloh
Quality Control Manager
Flame Metals Processing Corporation

Pinion
AAP1793827-02002
SO 266284
PO 30019282-142
SN 2293, 2295 thru 2299

Castle Metals®

A. M. Castle & Co.

PACKING SLIP/ CERTIFICATE OF CONFORMANCE

Shipment No:4732505

Ship From:	Sold To:	Ship To:	Deliver To:
JANESVILLE 3800 ENTERPRISE DRIVE JANESVILLE, WI 53546 USA	COLUMBIA GEAR CORP. 530 COUNTY ROAD 50 AVON, MN 56310 US	COLUMBIA GEAR CORP. FLAME METALS 12450 IRONWOOD CIRCLE ROGERS, MN 55374 USA	COLUMBIA GEAR CORP. FLAME METALS 12450 IRONWOOD CIRCLE ROGERS, MN 55374 US

Date Shipped	Inco Terms	Freight Terms	Carrier	BOL No
13-MAR-23	FCA ROGERS MN USA	Prepaid	CARDINAL	4732505-8

Shipment Details | **Final Destination Branch -** JVL

Order No	Line No	Item No	Description
1113109339	1	11502.MO	2.0000.RD.E4340.HR.AQ.ANN.ALLOY.MIN.R/R 16:1 CUT TO 17.6250 IN (+ .0625/- .0000 IN) - BAR COLD SAW CUTTING SPECIFICATIONS: AISI E4340,AMS 2301,AMS 6415,AMS S-5000 COND C1,ASTM A322,UNS G43406

Purchase Order No	Part Number	Ordered Qty	Invoice Qty
273375 LINE 1	YOUR ITEM NUMBER: 1793827020021SB	16.00 PCS	16.00 PCS

Details 230730000 46

Delivery No.	Mill	Heat Number	Mech Id	PCS	Width (IN)	Length (IN)	Shipped Qty(LBS)
124768337	TIMKENSTEEL CORPORATION	37321	A9725	16			253.7249

These items are controlled by the U.S. Government and authorized for export only to the country of ultimate destination for use by the ultimate consignee or end-user(s) herein identified. They may not be resold, transferred, or otherwise disposed of, to any other country or to any person other than the authorized ultimate consignee or end-user(s), either in their original form or after being incorporated into other items, without first obtaining approval from the U.S. Government or as otherwise authorized by U.S. law and regulations.

We hereby certify the material covered by this certification conforms in accordance with the above specifications and has been found to meet the applicable requirements for the material, including any specifications forming a part of the description. Test reports are on file subject to examination. All claims for defective material are waived unless made in writing to A.M. Castle & Co. within 60 days of the shipment. Material cut to the correct size, or material cut by the customer cannot be returned for credit.

Reviewed by Authorized Castle Metals Representative: | Date: | Name:

REVIEWED
MAR 15 2023
2737

Date Printed: 13-MAR-2023 06:49:09 AM

Pinion
AAP1793827-02002
SO 266284
PO 30019282-142
SN 2293, 2295 thru 2299

CERTIFICATE OF MATERIAL TEST REPORTS

H-A Industries
A Division of A. M. Castle & Co.
4527 Columbia Avenue
Hammond, IN 46327

Customer:

A. M. Castle & Co.
1420 Kensington Road
Suite 220
Oak Brook, IL 60523

MANUFACTURER (MILL)	CUST. ORDER NO.
TIMKENSTEEL CORPORATION	

IC	HEAT NO.	MECHANICAL ID	ORDER NO.	SHIP QUANTITY	DATE
11502	37321	A9725	13223360	9306	22-DEC-22

DESCRIPTION OF MATERIAL

2.0000.RD.E4340.ALLOY.HR.ANN.AQ.AMS 6415.216.0000-288.0000

CHEMICAL ANALYSIS %

C	MN	P	S	SI	CU	NI	CR	MO	AL
.41	.74	.011	.001	.28	.15	1.84	.78	.24	.024

JOMINY HARDENABILITY Rc

1	2	3	4	5	6	7	8	9	10	11	12	13	14	15	16	18	20	22	24	26	28	30	32
60	59	59	58	58	57	57	57	57	57		57		56		56	56	56		55		55		55

METALLURGICAL

MACROETCH	AMS 2301		USMCA	GRAIN SIZE
S: 2 R: 1 C: 2	F: 0 S: 0		YES	7
	REDUCTION RATIO 214.9	**INGOT CAST** YES	**FROM IC** 32783	
COUNTRY OF MANUFACTURE United States	**COUNTRY OF MELT** US			

HEAT TREATMENT

% LP ANNEAL	DECARB (In)	HRS	TEMP °F
85	.008	10.3	1520

HARDNESS

Location	Type		Location	Type	
SURF	HBW	207	SURF	HBW	208
SURF	HBW	212	SURF	HBW	209
SURF	HBW	214			

CONFORMANT TO SPECIFICATIONS

AMS 6415U EXC. CONT LINE MARK
AMS 2301L
ASTM A322-13 (REAPPROVED 2018)
ASTM A304-20
AMS-S-5000 COND C1
ASME SA540 B23 (CHEMICAL ONLY)
SBB EMS-4 REV D
UNS# G43406

H-A INDUSTRIES CERTIFIES THAT APPROPRIATE INFORMATION IS TAKEN FROM TEST REPORTS FURNISHED TO US BY OUR SUPPLIER AND WHICH ARE ON FILE IN OUR OFFICE. H-A INDUSTRIES CERTIFIES THAT THE MATERIAL LISTED HEREIN HAS BEEN INSPECTED AND TESTED IN ACCORDANCE WITH METHODS PRESCRIBED IN THE GOVERNING SPECIFICATIONS. THE RESULTS OF INSPECTION AND TESTING CONFORM TO THE SPECIFICATIONS LISTED INCLUDING ASTM A370 LATEST REVISION AND EN 10204:2004 3.1.

H-A CERTIFIES THAT THE METAL WHICH IS THE SUBJECT OF THIS CERTIFICATION IS MERCURY FREE AND WAS NOT EXPOSED TO ANY RADIOACTIVE SOURCE MATERIAL DOES NOT CONTAIN ANY POLYBROMINATED BIPHENYLS (PBB) OR POLYBROMINATED DIPHENYL ETHERS (PBDE). NO WELD OR WELD REPAIR WAS PERFORMED ON THIS MATERIAL.

THE RECORDING OF FALSE, FICTITIOUS OR FRAUDULENT STATEMENTS OR ENTRIES ON THIS DOCUMENT MAY BE PUNISHABLE AS A FELONY UNDER FEDERAL STATUTE.

NAME: JAN L. CARUSO
TITLE: MANAGER OF TECHNICAL SERVICES
SIGNATURE: Jan L. Caruso

Steel Certificate of Test

32783

1835 Dueber Ave. S.W.
Canton, Ohio 44706

ID #0565517-1

TIMKENSTEEL

10/27/2022

SOLD TO: A M Castle & Company
1420 Kensington Road
Suite 220
Oak Brook, IL 60523 USA

SHIP TO: H A Industries
4527 Columbia Avenue
Hammond, IN 46327 USA

Pinion
AAP1793827-02002
SO 266284
PO 30019282-142
SN 2293, 2295 thru 2299

Customer Order: 601680 32783 **Customer Part Number:** 32783
Mill Order: 21903-A (2287197) **Heat Number(s):** 37321

Description of Material

DIAMETER: 2.000 in (50.800 mm)
Shape: RD
Prod Type: BAR
Sales Type: 4340
Int Quality: ELECTRIC FURNACE-VACUUM DEGAS-AIRCRAFT
Condition: HOT ROLL

Specification

- A M CASTLE & COMPANY G43400-19 Rev. 38 07/28/2020 EXCEPT AS NOTED
- AMS 6415 Rev. U 12/07/2016 EXCEPT CONTINUOUS STENCIL & EXCEPT PARAGRAPH 3.2.1
- AMS 2301 Rev. L 05/19/2020
- AMS S-5000 Rev. A 03/01/2007 B1-CANCELLED AND SUPERCEDED BY AMS 6415
- EUROPEAN STANDARD EN 10204 12/17/2004 TYPE 3.1 INSPECTION CERTIFICATE
- AMS 2251 Rev. J 11/05/2018 EXCEPT AS NOTED
- AMS 2259 Rev. F 10/25/2017
- AMS 2370 Rev. L 06/20/2016
- ASME SA-540/SA-540M Rev. 2019 EDITION B23-FOR CHEMISTRY ONLY
- ASTM A322 Rev. 13 (Reapproved 2018) e1 09/01/2018
- ASTM A304 Rev. 20 07/01/2020 EXCEPT AS NOTED
- ASTM A29 / A29M Rev. 20 07/01/2020 EXCEPT AS NOTED

Chemistry Information

	%C	%Mn	%P	%S	%Si	%Cr	%Ni	%Mo	%Cu	%Al	%V	%B	%Ca	%Cb	%Co
SPEC Ladle Min:	.38	.65			.15	.70	1.65	.20		.020					
SPEC Ladle Max:	.43	.80	.025	.025	.35	.90	2.00	.30	.35	.050					
37321 Ladle:	**.41**	**.74**	**.011**	**.001**	**.28**	**.78**	**1.84**	**.24**	**.15**	**.024**	**.010**	**.0003**	**.0001**	**.004**	**.015**
37321 T13:	**.43**	**.73**	**.012**	**.002**	**.27**	**.78**	**1.89**	**.24**	**.16**	**.021**	**.009**	**.0001**	**.0001**	**.002**	**.015**

	ppmH	ppmH	%Pb	%Sn	%Ti	%W	%Zr
SPEC Ladle Min:							
SPEC Ladle Max:	2.5	2.5					
37321 Ladle:	**1.0**	**1.0**	**.0001**	**.008**	**.001**	**.009**	**.001**
37321 T13:			**.0010**	**.008**	**.002**	**.008**	**.001**

Testing of elements performed at TimkenSteel Chemistry Labs except where noted.

Metallurgy Information

SPEC: Grain Size ASTM E112 SIZE 5/FINER
Heat 37321 SIZE: 7

When shipping document is attached it becomes part of this certification.

We certify the above materials have been inspected and tested in accordance with the methods prescribed in the governing specifications and consistent with our Standard Commercial Terms and Conditions for Sale, Manufacture, and Shipping, which are incorporated into and made part of this certification. The results of such inspections and tests conform with the applicable requirements including the purchase order, specification(s) and exception(s). This certificate or report shall not be reproduced except in full, without the written approval of TimkenSteel Corporation.

Notarized: _____ **by** Lisa Bucklew
NOTARY PUBLIC

Lisa Bucklew, METALLOGRAPHER

Pinion
AAP1793827-02002
SO 266284
PO 30019282-142
SN 2293, 2295 thru 2299

Steel Certificate of Test

1835 Dueber Ave. S.W.
Canton, Ohio 44706
ID #0565517-1

TIMKENSTEEL

10/27/2022

Customer Order: 601680 32783 Customer Part Number: 32783
Mill Order: 21903-A (2287197) Heat Number(s): 37321

Metallurgy Information

SPEC: Decarb E1077 LEVEL 0.025 Max UOM IN

Heat	Sample	LEVEL	UOM
37321	326343	0.008	IN

SPEC: Jominy English NORMALIZING TEMPERATURE 1600 F / 871 C SAMPLE TYPE CAST E4340H

Location:	1	2	3	4	5	6	7	8	9	10	11	12	13	14	15	16	18	20	22	24	26	28	30	32	36	40
SPEC Min:	53	53	53	53	53	53	53	53	53	53	53	53	52	52	52	51	51	50	49	48	47	46	45	45		
SPEC Max:	60	60	60	60	60	60	60	60	60	60	60	60	60	59	59	59	58	58	58	57	57	57	57	57		
37321 ADL370:	**60**	**59**	**59**	**58**	**58**	**57**	**57**	**57**	**57**	**57**	**57**	**57**	**56**	**56**	**56**	**56**	**56**	**56**	**56**	**55**	**55**	**55**	**55**	**55**	**55**	**54**

SPEC: Mag Std (AMS 2301) FREQUENCY 0.340 Max SEVERITY 0.250 Max

Heat 37321 AMS 2301 FREQUENCY: 0.000 SEVERITY: 0.000

All Hardness and Tensile testing performed at TimkenSteel Metallurgical Lab except where noted.

Heat 37321 Melt Source: USA
Manufacturing: USA
Heat 37321 - Bottom Pour Ingot Cast Process
REDUCTION RATIO - 214.9:1

HEAT WAS MELTED AT ELLWOOD QUALITY STEELS COMPANY, NEW CASTLE, PA

MATERIAL IS ALSO DESIGNATED AS UNS# G43406

DFARS 252.225-7008 AND 252.225-7009 COMPLIANT (FORMERLY DFARS 252.225-7014)

Macroetch equal to or better than S2 R1 C2 in accordance with ASTM E381

The recording of false, fictitious or fraudulent statements or entries on this document may be punishable as a felony under Federal Statute Title 18, Chapter 47.

TimkenSteel certifies that there is no mercury or radio-active material used in the melting or processing.

USMCA - YES

MATERIAL WAS ELECTRIC FURNACE MELTED, VACUUM DEGASSED AND LADLE REFINED

No welding of this material has occurred.

In reference to Section 1502 ("Conflict Minerals") of the Dodd-Frank Wall Street Reform and Consumer Protection Act, no tantalum, tin, tungsten or gold was intentionally added to this material.

HA INDUSTRIES V-003 HAI

Pinion
AAP1793827-02002
SO 266284
PO 30019282-142
SN 2293, 2295 thru 2299

Castle Metals®

A. M. Castle & Co.

PACKING SLIP/ CERTIFICATE OF CONFORMANCE

Shipment No:4732505

Ship From:	Sold To:	Ship To:	Deliver To:
JANESVILLE 3800 ENTERPRISE DRIVE JANESVILLE, WI 53546 USA	COLUMBIA GEAR CORP. 530 COUNTY ROAD 50 AVON, MN 56310 US	COLUMBIA GEAR CORP. FLAME METALS 12450 IRONWOOD CIRCLE ROGERS, MN 55374 USA	COLUMBIA GEAR CORP. FLAME METALS 12450 IRONWOOD CIRCLE ROGERS, MN 55374 US

Date Shipped	Inco Terms	Freight Terms	Carrier	BOL No
13-MAR-23	FCA ROGERS MN USA	Prepaid	CARDINAL	4732505-8

Shipment Details — **Final Destination Branch** - JVL

Order No	Line No	Item No	Description
1113109339	2	11502.MO	2.0000.RD.E4340.HR.AQ.ANN.ALLOY.MIN.R/R 16:1 CUT TO 17.6250 IN (+ .0625/- .0000 IN) - BAR COLD SAW CUTTING SPECIFICATIONS: AISI E4340,AMS 2301,AMS 6415,AMS S-5000 COND C1,ASTM A322,UNS G43406

Purchase Order No	Part Number	Ordered Qty	Invoice Qty
273375 LINE 2	YOUR ITEM NUMBER: 1793827020021SB	15.00 PCS	15.00 PCS

Details 23073000 47

Delivery No.	Mill	Heat Number	Mech Id	PCS	Width (IN)	Length (IN)	Shipped Qty(LBS)
124769365	TIMKENSTEEL CORPORATION	37321	A9725	15			237.8671

These items are controlled by the U.S. Government and authorized for export only to the country of ultimate destination for use by the ultimate consignee or end-user(s) herein identified. They may not be resold, transferred, or otherwise disposed of, to any other country or to any person other than the authorized ultimate consignee or end-user(s), either in their original form or after being incorporated into other items, without first obtaining approval from the U.S. Government or as otherwise authorized by U.S. law and regulations.

We hereby certify the material covered by this certification conforms in accordance with the above specifications and has been found to meet the applicable requirements for the material, including any specifications forming a part of the description. Test reports are on file subject to examination. All claims for defective material are waived unless made in writing to A.M. Castle & Co. within 60 days of the shipment. Material cut to the correct size, or material cut by the customer cannot be returned for credit.

Reviewed by Authorized Castle Metals Representative: Date: Name:

REVIEWED MAR 15 2023 2737

Date Printed: 13-MAR-2023 06:49:09 AM

Pinion
AAP1793827-02002
SO 266284
PO 30019282-142
SN 2293, 2295 thru 2299

CERTIFICATE OF MATERIAL TEST REPORTS

H-A Industries
A Division of A. M. Castle & Co.
4527 Columbia Avenue
Hammond, IN 46327

Customer:
A. M. Castle & Co.
1420 Kensington Road
Suite 220
Oak Brook, IL 60523

MANUFACTURER (MILL)	CUST. ORDER NO.
TIMKENSTEEL CORPORATION	

IC	HEAT NO.	MECHANICAL ID	ORDER NO.	SHIP QUANTITY	DATE
11502	37321	A9725	13223360	9306	22-DEC-22

DESCRIPTION OF MATERIAL

2.0000.RD.E4340.ALLOY.HR.ANN.AQ.AMS 6415.216.0000-288.0000

CHEMICAL ANALYSIS %

C	MN	P	S	SI	CU	NI	CR	MO	AL
.41	.74	.011	.001	.28	.15	1.84	.78	.24	.024

JOMINY HARDENABILITY Rc

1	2	3	4	5	6	7	8	9	10	11	12	13	14	15	16	18	20	22	24	26	28	30	32
60	59	59	58	58	57	57	57	57	57		57		56		56	56	56		55		55		55

METALLURGICAL

MACROETCH	AMS 2301		USMCA	GRAIN SIZE
S: 2 R: 1 C: 2	F: 0 S: 0		YES	7
	REDUCTION RATIO 214.9	**INGOT CAST** YES	**FROM IC** 32783	
COUNTRY OF MANUFACTURE United States	**COUNTRY OF MELT** US			

HEAT TREATMENT

% LP ANNEAL	DECARB (In)	HRS	TEMP °F
85	.008	10.3	1520

HARDNESS

Location	Type		Location	Type	
SURF	HBW	207	SURF	HBW	208
SURF	HBW	212	SURF	HBW	209
SURF	HBW	214			

CONFORMANT TO SPECIFICATIONS

AMS 6415U EXC. CONT LINE MARK
AMS 2301L
ASTM A322-13 (REAPPROVED 2018)
ASTM A304-20
AMS-S-5000 COND C1
ASME SA540 B23 (CHEMICAL ONLY)
SBB EMS-4 REV D
UNS# G43406

H-A INDUSTRIES CERTIFIES THAT APPROPRIATE INFORMATION IS TAKEN FROM TEST REPORTS FURNISHED TO US BY OUR SUPPLIER AND WHICH ARE ON FILE IN OUR OFFICE. H-A INDUSTRIES CERTIFIES THAT THE MATERIAL LISTED HEREIN HAS BEEN INSPECTED AND TESTED IN ACCORDANCE WITH METHODS PRESCRIBED IN THE GOVERNING SPECIFICATIONS. THE RESULTS OF INSPECTION AND TESTING CONFORM TO THE SPECIFICATIONS LISTED INCLUDING ASTM A370 LATEST REVISION AND EN 10204:2004 3.1.

H-A CERTIFIES THAT THE METAL WHICH IS THE SUBJECT OF THIS CERTIFICATION IS MERCURY FREE AND WAS NOT EXPOSED TO ANY RADIOACTIVE SOURCE.MATERIAL DOES NOT CONTAIN ANY POLYBROMINATED BIPHENYLS (PBB) OR POLYBROMINATED DIPHENYL ETHERS (PBDE). NO WELD OR WELD REPAIR WAS PERFORMED ON THIS MATERIAL.

THE RECORDING OF FALSE, FICTITIOUS OR FRAUDULENT STATEMENTS OR ENTRIES ON THIS DOCUMENT MAY BE PUNISHABLE AS A FELONY UNDER FEDERAL STATUTE.

NAME: JAN L. CARUSO
TITLE: MANAGER OF TECHNICAL SERVICES
SIGNATURE: Jan L. Caruso

Steel Certificate of Test

32783

1835 Dueber Ave. S.W.
Canton, Ohio 44706
ID #0565517-1

TIMKENSTEEL

10/27/2022

SOLD TO: A M Castle & Company
1420 Kensington Road
Suite 220
Oak Brook, IL 60523 USA

SHIP TO: H A Industries
4527 Columbia Avenue
Hammond, IN 46327 USA

Pinion
AAP1793827-02002
SO 266284
PO 30019282-142
SN 2293, 2295 thru 2299

Customer Order: 601680 32783 **Customer Part Number:** 32783
Mill Order: 21903-A (2287197) **Heat Number(s):** 37321

Description of Material

DIAMETER: 2.000 in (50.800 mm)
Shape: RD
Prod Type: BAR
Sales Type: 4340
Int Quality: ELECTRIC FURNACE-VACUUM DEGAS-AIRCRAFT
Condition: HOT ROLL

Specification

- A M CASTLE & COMPANY G43400-19 Rev. 38 07/28/2020 EXCEPT AS NOTED
- AMS 6415 Rev. U 12/07/2016 EXCEPT CONTINUOUS STENCIL & EXCEPT PARAGRAPH 3.2.1
- AMS 2301 Rev. L 05/19/2020
- AMS S-5000 Rev. A 03/01/2007 B1-CANCELLED AND SUPERCEDED BY AMS 6415
- EUROPEAN STANDARD EN 10204 12/17/2004 TYPE 3.1 INSPECTION CERTIFICATE
- AMS 2251 Rev. J 11/05/2018 EXCEPT AS NOTED
- AMS 2259 Rev. F 10/25/2017
- AMS 2370 Rev. L 06/20/2016
- ASME SA-540/SA-540M Rev. 2019 EDITION B23-FOR CHEMISTRY ONLY
- ASTM A322 Rev. 13 (Reapproved 2018) e1 09/01/2018
- ASTM A304 Rev. 20 07/01/2020 EXCEPT AS NOTED
- ASTM A29 / A29M Rev. 20 07/01/2020 EXCEPT AS NOTED

Chemistry Information

	%C	%Mn	%P	%S	%Si	%Cr	%Ni	%Mo	%Cu	%Al	%V	%B	%Ca	%Cb	%Co
SPEC Ladle Min:	.38	.65			.15	.70	1.65	.20		.020					
SPEC Ladle Max:	.43	.80	.025	.025	.35	.90	2.00	.30	.35	.050					
37321 Ladle:	**.41**	**.74**	**.011**	**.001**	**.28**	**.78**	**1.84**	**.24**	**.15**	**.024**	**.010**	**.0003**	**.0001**	**.004**	**.015**
37321 T13:	**.43**	**.73**	**.012**	**.002**	**.27**	**.78**	**1.89**	**.24**	**.16**	**.021**	**.009**	**.0001**	**.0001**	**.002**	**.015**

	ppmH	ppmH	%Pb	%Sn	%Ti	%W	%Zr
SPEC Ladle Min:							
SPEC Ladle Max:	2.5	2.5					
37321 Ladle:	**1.0**	**1.0**	**.0001**	**.008**	**.001**	**.009**	**.001**
37321 T13:			**.0010**	**.008**	**.002**	**.008**	**.001**

Testing of elements performed at TimkenSteel Chemistry Labs except where noted.

Metallurgy Information

SPEC: Grain Size ASTM E112 SIZE 5/FINER
Heat 37321 SIZE: 7

When shipping document is attached it becomes part of this certification.

We certify the above materials have been inspected and tested in accordance with the methods prescribed in the governing specifications and consistent with our Standard Commercial Terms and Conditions for Sale, Manufacture, and Shipping, which are incorporated into and made part of this certification. The results of such inspections and tests conform with the applicable requirements including the purchase order, specification(s) and exception(s). This certificate or report shall not be reproduced except in full, without the written approval of TimkenSteel Corporation.

Notarized: _____ **by** Lisa Bucklew
NOTARY PUBLIC

Lisa Bucklew, METALLOGRAPHER

TimkenSteel Corporation

Steel Certificate of Test

1835 Dueber Ave. S.W.
Canton, Ohio 44706

ID #0565517-1

10/27/2022

Customer Order: 601680 32783 **Customer Part Number:** 32783
Mill Order: 21903-A (2287197) **Heat Number(s):** 37321

Metallurgy Information

SPEC: Decarb E1077 LEVEL 0.025 Max UOM IN

Heat	Sample	LEVEL	UOM
37321	326343	0.008	IN

SPEC: Jominy English NORMALIZING TEMPERATURE 1600 F / 871 C SAMPLE TYPE CAST E4340H

Location:	1	2	3	4	5	6	7	8	9	10	11	12	13	14	15	16	18	20	22	24	26	28	30	32	36	40
SPEC Min:	53	53	53	53	53	53	53	53	53	53	53	53	52	52	52	51	51	50	49	48	47	46	45	45		
SPEC Max:	60	60	60	60	60	60	60	60	60	60	60	60	60	59	59	59	58	58	58	57	57	57	57	57		
37321 ADL370:	**60**	**59**	**59**	**58**	**58**	**57**	**57**	**57**	**57**	**57**	**57**	**57**	**56**	**56**	**56**	**56**	**56**	**56**	**56**	**55**	**55**	**55**	**55**	**55**	**55**	**54**

SPEC: Mag Std (AMS 2301) FREQUENCY 0.340 Max SEVERITY 0.250 Max

Heat 37321 AMS 2301 FREQUENCY: 0.000 SEVERITY: 0.000

All Hardness and Tensile testing performed at TimkenSteel Metallurgical Lab except where noted.

Heat 37321 Melt Source: USA
Manufacturing: USA
Heat 37321 - Bottom Pour Ingot Cast Process
REDUCTION RATIO - 214.9:1

HEAT WAS MELTED AT ELLWOOD QUALITY STEELS COMPANY, NEW CASTLE, PA

MATERIAL IS ALSO DESIGNATED AS UNS# G43406

DFARS 252.225-7008 AND 252.225-7009 COMPLIANT (FORMERLY DFARS 252.225-7014)

Macroetch equal to or better than S2 R1 C2 in accordance with ASTM E381

The recording of false, fictitious or fraudulent statements or entries on this document may be punishable as a felony under Federal Statute Title 18, Chapter 47.

TimkenSteel certifies that there is no mercury or radio-active material used in the melting or processing.

USMCA - YES

MATERIAL WAS ELECTRIC FURNACE MELTED, VACUUM DEGASSED AND LADLE REFINED

No welding of this material has occurred.

In reference to Section 1502 ("Conflict Minerals") of the Dodd-Frank Wall Street Reform and Consumer Protection Act, no tantalum, tin, tungsten or gold was intentionally added to this material.

Pinion
AAP1793827-02002
SO 266284
PO 30019282-142
SN 2293, 2295 thru 2299

METAL TREATING INSTITUTE

DIAMOND HEAT TREAT LLC

Shipping Ticket

Order No.: 468860
Ship Date: 1/12/2023

Sold To: 525
COLUMBIA GEAR CORPORATION
530 COUNTY ROAD 50

AVON MN 56310-e

Ship To: 479165
COLUMBIA GEAR CORPORATION
530 COUNTY ROAD 50

AVON MN 56310-e

Purchase Order Number	Packing List No	Customer Job No	Route	Carrier
271048 LINE 1	190141	262836	Columbia Gea	UPS/HOLLAND

Quantity	Part No. / Part Name / Part Description	Pounds
	1793897-2102 REV 01	

Containers	Container Type	Quantity	Weight
1	BOX	30	25

PHONE: (815) 873-1348

Shipped Complete

Quantity Shipped: 30

Pounds Shipped: 25.00

STATEMENT OF LIMITED LIABILITY-All work is accepted subject to the following conditions: It is recognized that even after employing all the scientific methods known to DHT, hazards still remain in metal treating, THEREFORE DHT'S LIABILITY SHALL NOT EXCEED THE AMOUNT OF OUR CHARGES FOR THE WORK DONE ON ANY MATERIAL. The customer by contracting for metal treatment agrees to accept the limits of liability as expressed in this Statement to the exclusion of any and all provisions as to liability on the customer's own invoices, purchase orders or other documents.THE STATEMENT OF LIABILITY MENTIONED ABOVE IS SPECIFICALLY IN LIEU OF ANY EXPRESSED OR IMPLIED WARRANTY, INCLUDING ANY IMPLIED WARRANTY OF MERCHANTABILITY OR FITNESS AND OF ANY OTHER SUCH OBLIGATION ON THE PART OF THE TREATER. No claims for shortage in weight or count will be entertained unless presented within seven (7) working days after receipt of materials by customer. No claim will be made or allowed for shrinkage, expansion, deformity, or rupture of material in treating or straightening, nor for rupture caused by or occurring during subsequent grinding. Whenever DHT is given material with detailed instructions as to treatment, DHT's responsibility shall end with the carrying out of these instructions. Failure by a customer to indicate plainly and correctly the kind of material (i.e. proper designation) to be treated, shall cause an extra charge to be made to cover any additional expense incurred as a result thereof. There will be no liability on DHT for any special, indirect or consequential damages arising from any reason whatsoever, including but not limited to loss of profits, loss of production, recall or any other losses, expenses or liabilities allegedly occasioned by the work performed on the part of DHT. It shall be the duty of the customer to inspect the merchandise immediately upon its return, and in any event claims must be reported prior to the time that any further processing, assembling or any other work is undertaken. DHT'S LIABILITY TO CUSTOMER SHALL CEASE ONCE ANY FURTHER PROCESSING, ASSEMBLING OR ANY OTHER WORK HAS BEEN UNDERTAKEN ON SAID MATERIAL! No agent or representative is authorized to alter the above conditions, except in writing duly signed by an officer of DHT.

RECEIVED
JAN 13 2023
COLUMBIA GEAR

Thrust Collar
AAP1793827-02002
SO 266284
PO 30019282-142
SN 2293, 2295 thru 2299

Order No.: 468860

Shipped Complete

Quantity Shipped: 30.00

Pounds Shipped: 25.00

Received By:

Date:

Sold To: COLUMBIA GEAR CORPORATION

Shipped ON: 01/12/2023

DIAMOND HEAT TREAT, I

DIAMOND HEAT TREAT LLC
Certification

Ord r No.: 468860
Date: 01/11/2023
Entr Date: 12/27/2022
Page: 1 of 2

To:
COLUMBIA GEAR CORPORATION
530 COUNTY ROA 50

Purchase Order No.: 271048 L NE 1
Packing List No.: 190141
Material: 4140

AVON MN 56310-e

We are pleased to p le you with the following Certification

Quantity	Pa	Number / Part Name / Part Description	Pounds
30		897-2102 Thrust Collar AAP1793827-02002 SO 266284 PO 30019282-142 SN 2293, 2295 thru 2299	25
	FE	01	
AGMA 923 GRADE			

Insp. Type	Scal	Minimum	Maximum	Number	Other
Customer Requirements:					
EFF CASE	THOUS	.024			
15N	15	84.	88.		

Results:

PIN MATERIAL USED 140
HARDNESS TRAVERSE PIN or PART___PIN_____

MEASURED ON A 500 GRAM LOAD
DEPTH-KNOOP
.002- 599
.004-633
.006-590
.008-559
.010-527
.012-509
.014-491
.016-476
.018-473
.020-461
.022-439
.024-410

SPALLING____CR1_____

DIRECT HRC__32_____HRC

WHITE LAYER____0.0004-0.0007_____WL

SURFACE HARDNESS BEFORE NITRIDING_____33_____HRC
PIN or PART_____PART_____

CORE HARDNESS AFTER NITRIDING_____30_____HRC

3691 PUBLISHERS DRIVE ROCKFORD IL 61109 Phone: (815) 873-1348 Fax: (815) 874-8764

DIAMOND HEAT TREAT, I...

DIAMOND HEAT TREAT LLC
Certification

Ord r No.: **468860**
Date: 01/11/2023
Entr **Date:** 12/27/2022
Page: 2 of 2

To:
COLUMBIA GEAR CORPORATION
530 COUNTY ROA) 50

AVON MN 56310-e

Purchase Order No.: 271048 L NE 1
Packing List No.: 190141
Material: 4140

PIN or PART_____PIN_____

__421_____KNOOP A1 0.023____ SURFACE HARDNESS_____86-87_____HR15N
CODE USED ____NITI IL _____ MATRIX MICROSTRUCTURE--- VISUAL 500X NORMAL

STATEMENT OF LIMITED LIABILITY-A
SHALL NOT EXCEED THE AMOUNT C
and all provisions as to liability on the c
INCLUDING ANY IMPLIED WARRANT
seven (7) working days after receipt of
grinding. Whenever DHT is given mate
designation) to be treated, shall cause a
including but not limited to loss of profit
immediately upon its return, and in any
PROCESSING, ASSEMBLING OR AN

epted subject to the following conditions: It is recognized that even after employing all the scientific methods known to DHT, hazards still remain
HARGES FOR THE WORK DONE ON ANY MATERIAL. The customer by contracting for metal treatment agrees to accept the limits of liability as
ver invoices, purchase orders or other documents.THE STATEMENT OF LIABILITY MENTIONED ABOVE IS SPECIFICALLY IN LIEU OF ANY E
CHANTABILITY OR FITNESS AND OF ANY OTHER SUCH OBLIGATION ON THE PART OF THE TREATER. No claims for shortage in weight
by customer. No claim will be made or allowed for shrinkage, expansion, deformity, or rupture of material in treating or straightening, nor for rupture
related instructions as to treatment, DHT's responsibility shall end with the carrying out of these instructions. Failure by a customer to indicate plainly
steps to be made to cover any additional expense incurred as a result thereof. There will be no liability on DHT for any special, indirect or consequen
reduction, recall or any other losses, expenses or liabilities allegedly occasioned by the work performed on the part of DHT. It shall be the duty of th
ns must be reported prior to the time that any further processing, assembling or any other work is undertaken. DHT'S LIABILITY TO CUSTOMER S
WORK HAS BEEN UNDERTAKEN ON SAID MATERIAL. No agent or representative is authorized to alter the above conditions, except in writing

tal treating, THEREFORE DHT'S LIABILITY
ssed in this Statement to the exclusion of any
SSED OR IMPLIED WARRANTY,
t will be entertained unless presented within
ed by or occurring during subsequent
correctly the kind of material (i.e. proper
mages arising from any reason whatsoever,
tomer to inspect the merchandise
CEASE ONCE ANY FURTHER
gned by an officer of DHT.

Thrust Collar
AAP1793827-02002
SO 266284
PO 30019282-142
SN 2293, 2295 thru 2299

K Ridenour

Katie Ridenour
Lab Technician
DIAMOND HEAT TREAT IC.

3691 PUBLISHERS DRI F ROCKFORD IL 61109 **Phone:** (815) 873-1348 **Fax:** (815) 874-8764

849263

Flame Metals Processing Corp.

Shipping Ticket

Order No.: 849263
Ship Date: 12/15/2022

Sold To: 845
COLUMBIA GEAR
530 COUNTY ROAD 50
AVON MN 56310

Ship To: 911390
COLUMBIA GEAR
530 COUNTY ROAD 50
AVON MN 56310

Thu - 12/15/2022

Purchase Order Number	Packing List No	Customer Job No	Carrier
270742-1	SO#: 262836		TT

Quantity	Part No	Part Name / Part Description	Pounds
30	1793897-2102 Rev. 01, Date:2/21/00(C&T2)	Collar, Thrust - E4140 AQ Material Harden and temper to 32-36 HRC	70.2

ENGDA

Container Type	# Of Containers	Cust Cont Id	Container Type	# Of Containers	Cust Cont Id
Wood Box	1	FLR			

Flame Metals is ISO 9001:2015 registered.

Thrust Collar
AAP1793827-02002
SO 266284
PO 30019282-142
SN 2293, 2295 thru 2299

Shipped Complete

Quantity Shipped: 30
Pounds Shipped: 70.20

RECEIVED
DEC 15 2022
COLUMBIA GEAR

Packing and Shipping Record (Results recorded on FMPC's signature copy and not on customers copy)				
Final Packing Date	Packer's Initials	Gross Weight	Piece Weight (Optional)	Tare Weight (Optional)
Packaging Description / Notes		Storage Location	Customer Notification Date / Method / Notes	

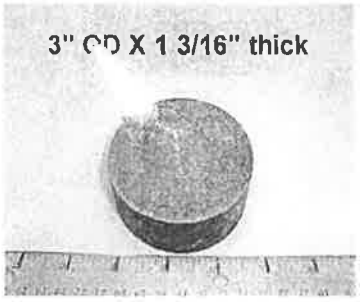

Order No.: 849263
Phone: 320-356-7301

Shipped Complete

Quantity Shipped: 30.00
Pounds Shipped: 70.20

Received By:

Date:

Sold To: COLUMBIA GEAR

Thrust Collar
AAP1793827-02002
SO 266284
PO 30019282-142
SN 2293, 2295 thru 2299

Flame Metals Processing Corp.
Certification

Order No.: 849263
Date: 12/15/2022
Entry Date: 12/08/2022

To:
COLUMBIA GEAR
530 COUNTY ROAD 50

AVON MN 56310

Purchase Order No.: 270742-1
Packing List No.: SO#: 262836
Material: 4140

Quantity	Part Number / Part Nar.	Part Description	Pounds
30	1793897-2102 Rev. 01, D	2/21/00(Q&T2) Collar, Thrust - E4140 AQ Material Harden and temper to 32-36 HRC	70.2

Insp. Type	Scale	Minimum	Maximum	Number	Other	Inspection ID#
Hardnss	HRC				As Quench Hardness	
Hardnss	HRC	32.	36.		Final As Tempered Surface Hard	

The undersigned, individually, and as the authorized representative of the contractor, warrants and represents that: To the best of our knowledge all the information supplied below is true and accurate. The certificate conforms to all requirements (including purchase orders, drawings and specifications); the inspection test results and analysis appearing herein are true and accurate; and this certificate is made for the purpose of reporting quality

Process Ok:
Furnaces used: austenitzed in #239,
As Quenched Hardness: 52.0 HRC

Tempered in unit#217. Final tempering temperature: 1050'F

Final Hardness on machined/grind surfaces: 34.9 - 35.2 HRC

Lindsey King 12/15/2022

Mohamed P. Jalloh

Mohamed P.Jalloh
Quality Control Manager
Flame Metals Processing Corporation

12450 Ironwood Circle Rogers MN 55374 **Phone:** (763) 428-2596 **Fax:** (763) 428-3689

Thrust Collar
AAP1793827-02002
SO 266284
PO 30019282-142
SN 2293, 2295 thru 2299

FROM: EARLE M. JORGENSEN COMPANY
P.O. BOX 490130
1775 101ST AVENUE NE
BLAINE

S.I.D. ORDER NO. S235790
ORDERED BY: DOUG 320-356
PHONE: 320 356-7301
CUST. ORD. NO.: 269463

PAGE 1 OF 1
PAWEL_AM
C709135

SOLD TO
COLUMBIA GEAR CORPORATION
530 COUNTY ROAD 50
AVON
MN 56310

SHIP TO
COLUMBIA GEAR CORPORATION
530 COUNTY ROAD 50
AVON
MN 56310
FAX: 320 3569010
002

XFER #

DATE ORD.	CUSTOMER P.O.		F.O.B.	DEL AREA	VIA		CUST. ACCT.	PROM. DATE
26-OCT-22	269463		DESTIN	PAWL1207	OUR TRUCK		246515	07-DEC-22
ORDER WGT.	**I/S 81J**	**TERR.**	**TYPE**	**TAX RATE**	**PPD/COLL**	**C.O.D.**	**TEST REPORT**	**SHIP DATE**
68	GREG ABBOTT		S		PREPAID	2	B PRO # Y	07-DEC-22

*** *** WRITE THE PO# NUMBER ON EACH BAR!!* ***

507965 4140 CF ANN AQ BAR MIL S 5626 COND C4 7228500090
30.00 EA 3 RD S/C 0'1.125" (1.125") 67.6688 LB
BRN W/FT 24.0600 EXT WGT: 68
PT#17938972102SB JOB/BTCH# 269463 PO LN#

CUTTING SAW
Processing Tolerance: +1/16 -0
CUT 30 pcs @ 0'1.125"
PACKAGING MISC
HEAT # 79004925 LOCATION:1-08-02-06 Y

1 BAG 30 PC
67 LB 4

RECEIVED
DEC 07 2022
COLUMBIA GEAR

The property described below in apparent good order except as noted (contents and condition of contents unknown) marked, consigned and destined as indicated below, which said carrier, (the word carrier being understood throughout this contract as meaning any person or corporation in possession of the property under the contract) agrees to carry to its usual place of delivery at said destination if on its route, otherwise to deliver to another carrier on the route to said destination it is mutually agreed as to each carrier of all or any of said property over all or any portion of said route to destination and as to each party at any time interested in all or any of said property that every service to be performed hereunder shall be subject to all terms and conditions of the Uniform Domestic Straight Bill of Lading set forth (1) in Official, Southern, Western, and Illinois freight Classification in effect on the date hereof, if this is a rail or rail water shipment, or (2) in the applicable motor carrier classification or tariff if this is a motor carrier shipment.
Shipper hereby certifies that he is familiar with all the terms and conditions of the said bill of lading, including those on the back thereof, set forth in the classification or tariff which governs the transportation of this shipment and the said terms and conditions are hereby agreed to by the shipper and accepted for himself and his assigns.

These commodities are controlled for export by the United States government under the Export Administration Regulations. Diversion contrary to U.S. law prohibited. Purchaser is responsible to comply with these regulations if the items are to be exported from the United States or re-exported from a foreign country. See http://www.bis.doc.gov for U.S. requirements. ECCN# EAR99 License# _____

22.34180046

RECEIVED ABOVE GOODS
IN TERMS AND CONDITIONS
APPEARING ON BACK OF INVOICE X

INVOICE AMT.	ADDITIONAL CHARGES	V.A.T. TAX	TAX/AMT.	TOTAL

NO. OF PKGS.	PKG. TYPE	NO. OF PKGS	PKG. TYPE	TOTAL PCS.	DESCRIPTION OF ARTICLES	SHIP WGT.	CLS
1	Ttl			1	IRN/STL BAR 104	68	050
PACKING SLIP					TOTAL	68	

FREIGHT CHARGES ARE TO BE PRE-PAID UNLESS THIS BLOCK IS CHECKED ☐

Subject to Section 7 of conditions, if this shipment is to be delivered to the consignee without recourse on the consignor, the consignor shall sign the following statement.
The carrier shall not make delivery of this shipment without payment of freight and all other lawful charges.
(Signature of Consignor)

CARRIER SEND FREIGHT BILL TO:

SHIPPER PER X

C.O.D. AMOUNT

C.O.D. FEE TO BE PAID BY
SHIPPER ☐ CONSIGNEE ☐

CARRIER
AGENT _____
PER:

CERTIFICATE OF TEST

Thrust Collar
AAP1793827-02002
SO 266284
PO 30019282-142
SN 2293, 2295 thru 2299

Certification Date
6-DEC-2022

CUSTOMER ORDER NUMBER
269463

CUSTOMER PART NUMBER
17938972102SB

EARLE M. JORGENSEN COMPANY
P.O. BOX 490130
1775 101ST AVENUE NE
BLAINE MN 55449

Invoice Number
S235790

SOLD TO: COLUMBIA GEAR CORPORATION
530 COUNTY ROAD 50
AVON MN 56310

SHIP TO: COLUMBIA GEAR CORPORATION
530 COUNTY ROAD 50
AVON MN 56310

Description: 4140 CF ANN AQ BAR MIL S 5626 COND C4
3 RD S/C 0'1.125" (1.125") Line Total: 67.6688 LB
HEAT: 79004925 ITEM: 507965

Specifications:

MIL S 5626 C	AMS 2301 K	AMS 6382 R
AMS S 5626 A	ASTM A108 18	ASTM A29 16
ASTM A322 13	EN 10204 3.1	ASTM E112 13
ASTM E10 18	ASTM A255 10	ASTM A304 16
ASTM E381 17	AMS 2301 K	

CHEMICAL ANALYSIS

C	MN	P	S	SI	NI	CR	MO
0.42	0.87	0.0090	0.017	0.26	0.15	0.99	0.16

CU	SN	AL	V	NB
0.20	0.007	0.024	0.006	0.002

RCPT: R453520
VENDOR: MAGELLAN CORPORATION COUNTRY OF ORIGIN : USA

MECHANICAL PROPERTIES

DESCRIPTION	YLD STR	ULT TEN	%ELONG	%RED IN AREA	HARDNESS BHN
					199



The above data were transcribed from the manufacturer's Certificate of Test after verification for completeness and specification requirements of the information on the certificate. All test results remain on file subject to examination.

We hereby certify that the material covered by this report will meet the applicable requirements described herein, including any specification forming a part of the description.

The willful recording of false, fictitious, or fraudulent statements in connection with test results may be punishable as a felony under federal statutes.

Material did not come in contact with mercury while in our possession.

STEVE TEIPEL

MANAGER, QUALITY ASSURANCE

Thrust Collar
AAP1793827-02002
SO 266284
PO 30019282-142
SN 2293, 2295 thru 2299

CERTIFICATE OF TEST

Certification Date
6-DEC-2022

CUSTOMER ORDER NUMBER
269463

CUSTOMER PART NUMBER
17938972102SB

EARLE M. JORGENSEN COMPANY
P.O. BOX 490130
1775 101ST AVENUE NE
BLAINE MN 55449

Invoice Number
S235790

SOLD TO: COLUMBIA GEAR CORPORATION
530 COUNTY ROAD 50
AVON MN 56310

SHIP TO: COLUMBIA GEAR CORPORATION
530 COUNTY ROAD 50
AVON MN 56310

Description: 4140 CF ANN AQ BAR MIL S 5626 COND C4
3 RD S/C 0'1.125" (1.125") Line Total: 67.6688 LB
HEAT: 79004925 ITEM: 507965
END-QUENCH HARDENABILITY (JOMINY - RC)

1	2	3	4	5	6	7	8	9	10	11	12	13	14	15
57	57	57	57	57	57	56	55	54	52	51	50	49	48	47

16	18	20	22	24	26	30	32
46	45	45	45	43	41	40	38

GRAIN SIZE :5 - 8

REDUCTION RATIO 11.9 TO 1 VACUUM DEGASSED
MATERIAL IS FREE FROM MERCURY CONTAMINATION
NO WELD REPAIR PERFORMED ON MATERIAL
DECARB: OK
MACRO: OK
AMS NO :2301
SEVERITY :0.0
FREQUENCY:0.0

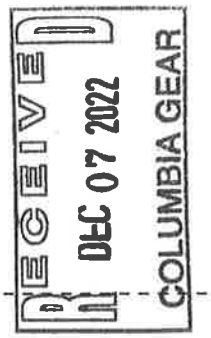

The above data were transcribed from the manufacturer's Certificate of Test after verification for completeness and specification requirements of the information on the certificate. All test results remain on file subject to examination.

We hereby certify that the material covered by this report will meet the applicable requirements described herein, including any specification forming a part of the description.

The willful recording of false, fictitious, or fraudulent statements in connection with test results may be punishable as a felony under federal statutes.

Material did not come in contact with mercury while in our possession.

STEVE TEIPEL

MANAGER, QUALITY ASSURANCE

S07965 R453520

GERDAU

Gerdau Special Steel North America
5591 Morrill Rd
Jackson, MI 49201 USA

Monroe Mill: 3000 East Front Street
Monroe, MI 48161 USA

Certified Material Test Report

Certified Material Test Report

Customer Order Number	Customer Part Number	Customer Part Description	Date
215255	4140-260-3.00-12'6		7/14/2022

Lot Number	Heat Number	Heat Code
58597101	79004925	79004925

Report To

MAGELLAN CORPORATION
1650 LAKE COOK RD
STE 300A
DEERFIELD, IL 60015

Ship To

MAGELLAN CORPORATION
1650 LAKE COOK RD
DEERFIELD, IL 60015
USA

ORDERED

Grade	Size	Size U of M	Length	Length U of M
4140/4142 AQ	3.00000	DI	12 ' 06 00 / 00 "	IN

Customer Specifications

AMS-S-5626A; MIL-S-5626C COND C4; AMS 6382R; AMS 2301K; AQ ASTM A331-95 HAS BEEN REPLACED BY ASTM A108-18; MIL-2-5626C (CANCELLED), REPLACED BY AMS-S-5626A 1/02 (CANCELLED), REPLACED BY AMS 6382R 8/18; ZERO DECARB ON TURNED BAR; ASTM A29/A29M-16; ASTM A322-13; T&P; ANNEALED; EN 10204 3.1; VACUUM DEGASSED; ASTM E112-13; ASTM E10-18; ASTM A255-10; ASTM A304-16; ASTM E381-17; AMS 2301K

CHEMISTRY CERT

C	Mn	P	S	Si	Ni	Cr	Mo
0.42	0.87	0.009	0.017	0.26	0.15	0.99	0.16
Cu	Sn	Al	V	Nb			
0.20	0.007	0.024	0.006	0.002			

GRAIN SIZE

100% OF GRAINS MEET SPECIFICATION

ASTM E112-13 FINE GRAIN 5-8

Thrust Collar
AAP1793827-02002
SO 266284
PO 30019282-142
SN 2293, 2295 thru 2299

HARDNESS BHN HEAT TREAT

F1_HT_SURFACE_BHN = 199

JOMINY STD THEORETICAL

J 01	J 02	J 03	J 04	J 05	J 06	J 07	J 08	J 09	J 10	J 11	J 12	J 13	J 14	J 15	J 16	J 18	J 20	J 22	J 24	J 26	J 28	J 30	J 32
57	57	57	57	57	57	56	55	54	52	51	50	49	48	47	46	45	45	45	43	41	40	40	38

MACROSTRUCTURAL FMB

PLATE 1

	S	R	C
FRONT	1	1	1
MIDDLE	1	1	1
BACK	1	1	1

PLATE 2 = NONE

COLUMBIA GEAR
RECEIVED
DEC 07 2022

We certify that these data are correct and in compliance with specified requirements. If there are any issues or concerns please contact Pat Doyle at pat.doyle@gerdau.com or (734) 384-6605

Gerdau Special Steel North America
5591 Morrill Rd
Jackson, MI 49201 USA

Monroe Mill: 3000 East Front Street
Monroe, MI 48161 USA

Patrick J. Doyle

DOYLE, PATRICK
METALLURGY MANAGER GSN

Continued on next page.

Customer:COLUMBIA GEAR CORPORATION | Ord #:S235790 | Part #:17938972102SB | Cust PO #:269463

Gerdau Special Steel North America
5591 Morrill Rd
Jackson, MI 49201 USA

Monroe Mill: 3000 East Front Street
Monroe, MI 48161 USA

Certified Material Test Report

Certified Material Test Report

Customer Order Number	Customer Part Number	Customer Part Description	Date
215255	4140-260-3.00-12'6		7/14/2022

Lot Number	Heat Number	Heat Code
58597101	79004925	79004925

Report To

MAGELLAN CORPORATION
1650 LAKE COOK RD
STE 300A
DEERFIELD, IL 60015

Ship To

MAGELLAN CORPORATION
1650 LAKE COOK RD
DEERFIELD, IL 60015
USA

ORDERED

Grade	Size	Size U of M	Length	Length U of M
4140/4142 AQ	3.00000	DI	12 ' 06 00 / 00 "	IN

Customer Specifications

AMS-S-5626A; MIL-S-5626C COND C4; AMS 6382R; AMS 2301K; AQ ASTM A331-95 HAS BEEN REPLACED BY ASTM A108-18; MIL-2-5626C (CANCELLED), REPLACED BY AMS-S-5626A 1/02 (CANCELLED), REPLACED BY AMS 6382R 8/18; ZERO DECARB ON TURNED BAR; ASTM A29/A29M-16; ASTM A322-13; T&P; ANNEALED; EN 10204 3.1; VACUUM DEGASSED; ASTM E112-13; ASTM E10-18; ASTM A255-10; ASTM A304-16; ASTM E381-17; AMS 2301K

MAGNAFLUX

FREQUENCY
0.00

SEVERITY
0.00

REDUCTION RATIO

11.9/1

Thrust Collar
AAP1793827-02002
SO 266284
PO 30019282-142
SN 2293, 2295 thru 2299

RECEIVED
DEC 07 2022
COLUMBIA GEAR

We certify that these data are correct and in compliance with specified requirements. If there are any issues or concerns please contact Pat Doyle at pat.doyle@gerdau.com or (734) 384-6605

Gerdau Special Steel North America
5591 Morrill Rd
Jackson, MI 49201 USA

Monroe Mill: 3000 East Front Street
Monroe, MI 48161 USA

Patrick J. Doyle

DOYLE, PATRICK
METALLURGY MANAGER GSN

Customer:COLUMBIA GEAR CORPORATION | Ord #:S235790 | Part #:17938972102SB | Cust PO #:269463

Customer:COLUMBIA GEAR CORPORATION | Ord #:S235790 | Part #:17938972102SB | Cust PO #:269463

Gerdau Special Steel North America
5591 Morrill Rd
Jackson, MI 49201 USA

Monroe Mill: 3000 East Front Street
Monroe, MI 48161 USA

Certified Material Test Report

Certified Material Test Report

Customer Order Number	Customer Part Number	Customer Part Description	Date
215255	4140-260-3.00-12'6		7/14/2022

Lot Number	Heat Number	Heat Code
58597101	79004925	79004925

Report To

MAGELLAN CORPORATION
1650 LAKE COOK RD
STE 300A
DEERFIELD, IL 60015

Ship To

MAGELLAN CORPORATION
1650 LAKE COOK RD
DEERFIELD, IL 60015
USA

ORDERED

Grade	Size	Size U of M	Length	Length U of M
4140/4142 AQ	3.00000	DI	12 ' 06 00 / 00 "	IN

Customer Specifications

AMS-S-5626A; MIL-S-5626C COND C4; AMS 6382R; AMS 2301K; AQ ASTM A331-95 HAS BEEN REPLACED BY ASTM A108-18; MIL-2-5626C (CANCELLED), REPLACED BY AMS-S-5626A 1/02 (CANCELLED), REPLACED BY AMS 6382R 8/18; ZERO DECARB ON TURNED BAR; ASTM A29/A29M-16; ASTM A322-13; T&P; ANNEALED; EN 10204 3.1; VACUUM DEGASSED; ASTM E112-13; ASTM E10-18; ASTM A255-10; ASTM A304-16; ASTM E381-17; AMS 2301K

** MATERIAL 100% MELTED AND MANUFACTURED IN THE U.S.A BY THE ELECTRIC ARC FURNACE AND CONTINUOUS CASTING METHOD. THE PRODUCT HAS NOT BEEN REPAIRED BY WELDING AND THIS MATERIAL HAS NOT BEEN EXPOSED TO MERCURY OR TO ANY OTHER METAL ALLOY THAT IS LIQUID AT AMBIENT TEMPERATURES DURING PROCESSING OR WHILE IN OUR POSSESSION. GERDAU MONITORS ALL INCOMING SCRAP AND ALL HEATS OF STEEL TO ENSURE THAT PRODUCTS SHIPPED ARE FREE OF RADIOACTIVE MATERIAL. MATERIAL IS 100% RECYCLABLE.

Thrust Collar
AAP1793827-02002
SO 266284
PO 30019282-142
SN 2293, 2295 thru 2299

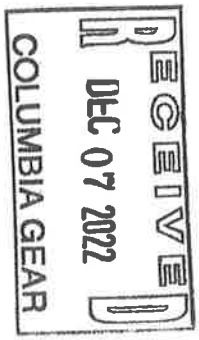

We certify that these data are correct and in compliance with specified requirements. If there are any issues or concerns please contact Pat Doyle at pat.doyle@gerdau.com or (734) 384-6605

Gerdau Special Steel North America
5591 Morrill Rd
Jackson, MI 49201 USA

Monroe Mill: 3000 East Front Street
Monroe, MI 48161 USA

Patrick J. Doyle

DOYLE, PATRICK
METALLURGY MANAGER GSN

Customer:COLUMBIA GEAR CORPORATION | Ord #:S235790 | Part #:17938972102SB | Cust PO #:269463

Customer:COLUMBIA GEAR CORPORATION | Ord #:S235790 | Part #:17938972102SB | Cust PO #:269463

COLUMBIA GEAR
RECEIVED
DEC 07 2022

MAGELLAN CORPORATION
a SeaTrade company

Thrust Collar
AAP1793827-02002
SO 266284
PO 30019282-142
SN 2293, 2295 thru 2299

1650 Lake Cook Road Suite 300A Deerfield, IL 60015 USA
Telephone: (847) 205-1155

MOR: 404188

SR: 20263215

Packing List / Certificate of Conformance

Sold To: EMJ-Schaumburg

Producing Mill: Gerdau Special Steel North America

Customer PO / Item	Bundle #	Description	Heat # / Lot #	Pieces	Weight Pounds
P213434-423 / 507965	931579	4140-CFANN-BRRD-3.0000	79003786 / 54630101	14	4,210
P213434-423 / 507965	931583	4140-CFANN-BRRD-3.0000	79004925 / 58597101	10	3,007
				Total	
				24	7,217

Customer:COLUMBIA GEAR CORPORATION | Ord #:S235790 | Part #:17938972102SB | Cust PO #:269463

Customer:COLUMBIA GEAR CORPORATION | Ord #:S235790 | Part #:17938972102SB | Cust PO #:269463

Ingersoll Rand
338 Valley Rd
Mocksville, NC 27028

DOCUMENT 2D: MATERIAL CERTIFICATIONS: IMPELLERS

Date:	02/08/2024
Customer:	Air Products
User:	Air Products
Compressor Model:	TA3000
Customer Order Number:	4505773730
Compressor Serial Number:	22590

TO WHOM IT MAY CONCERN:

Ingersoll Rand hereby certifies the impellers conform to applicable specifications: AMS 5659M and ASTM A705.

- Impeller Stage 1 (15-5 Stainless Steel): SN D30037919-1; Heat # 64331-1V
- Impeller Stage 2 (15-5 Stainless Steel): SN D30040487-1; Heat # 64398-6V
- Impeller Stage 3 (15-5 Stainless Steel): SN D30039695-2; Heat # G28816K07



Donald J Bauch
PAC Quality Engineer
Ingersoll Rand

CERTIFICATION

VULCAN STEAM FORGING CO.
247 RANO STREET
P.O. BOX 87
BUFFALO, NY 14207
Phone: (716) 875-3680 • Fax: (716) 875-3226

INGERSOLL-RAND COMPANY
P. O. BOX 2375
DAVIDSON, NC 28036

Date 05/24/23
PO # 30014868-145-19A-70
B/L # 19533
SO # 9431-19A
INV # 19533F
11652-1

We hereby certify that the following is a true copy of data, furnished by the mill producer or from tests performed in approved laboratories and conforms to requirements of any specifications listed.

HEAT 64331-1V **GRADE** 15-5 VAR

C	Mn	P	S	Si	Cr	Ni	Cu	Al	Cb
00.045	00.49	00.020	00.001	00.35	14.92	04.56	03.52	00.02	00.30

P+S
0.021

QUANTITY	DESCRIPTION	SPECIFICATIONS
5	RM TO SIZE 9.50"DIA X 4.00"LG AAR1793307-01040 FORGING RATIO 07.60:1	AAMS-0102 QTC 9. DIA X 1 LG SMPLS TRANSVERSE QTC BHN SAME AS BAR

HARDNESS	THERMAL TREATMENT			
BHN 341	ANNEALED	1900F/ 5.75 HR AC/MTHD 1	R/T CHARPY IMPACTS	47.0
	AGED	1075F/12.00 HR AC/MTHD 1		36.0
				49.0
	UT PER IL-600 = ACCEPTABLE		AVG	44.0

MECHANICAL PROPERTIES:

TENSILE PSI	YIELD PSI	% ELONG	% R.A.
157,152	156,593	12.0 (in 2")	45.1

VULCAN STEAM FORGING CO.

By: Kathie Mis
Certification Analyst

- THE RECORDING OF FALSE, FICTITIOUS OR FRAUDULENT STATEMENTS OR ENTRIES ON THIS DOCUMENT MAY BE PUNISHABLE AS A FELONY UNDER FEDERAL STATUTES
- MATERIAL DID NOT COME INTO CONTACT WITH MERCURY/ASBESTOS CONTAMINATION AT VSF

mo6/7

CERTIFICATION

VULCAN STEAM FORGING CO.
247 RANO STREET
P.O. BOX 87
BUFFALO, NY 14207
Phone: (716) 875-3680 • Fax: (716) 875-3226

INGERSOLL-RAND COMPANY
P. O. BOX 2375
DAVIDSON, NC 28036

Date 05/30/23
PO # 30014868-160-52-25
B/L # 19538
SO # 9544-52
INV # 19538C
11454

We hereby certify that the following is a true copy of data, furnished by the mill producer or from tests performed in approved laboratories and conforms to requirements of any specifications listed.

HEAT 64398-6V **GRADE** 15-5 VAR

C	Mn	P	S	Si	Cr	Ni	Mo	Cu	Cb
00.045	00.55	00.018	00.001	00.34	14.51	04.53	00.27	03.47	00.30

Ta	N	Co	Al	CbTa
00.01	00.018	00.03	00.02	00.31

QUANTITY	DESCRIPTION	SPECIFICATIONS
2	RM TO SIZE 7.00"DIA X 2.75"LG AAR1807412-00728 FORGING RATIO 06.90:1	AAMS-0102 QTC 10 DIA X 1 LG SMPLS TRANSVERSE QTC BHN SAME AS BAR

HARDNESS	THERMAL TREATMENT			
BHN 341	ANNEALED	1900F/ 4.50 HR AC/MTHD 1	R/T CHARPY IMPACTS	36.5
	AGED	1075F/10.25 HR AC/MTHD 1		30.0
				36.0
	UT PER IL-600 = ACCEPTABLE		AVG	34.2

MECHANICAL PROPERTIES:

TENSILE PSI	YIELD PSI	% ELONG	% R.A.
162,407	159,711	14.0 (in 2")	46.7

VULCAN STEAM FORGING CO.

By: Kathee Mis
Certification Analyst

- THE RECORDING OF FALSE, FICTITIOUS OR FRAUDULENT STATEMENTS OR ENTRIES ON THIS DOCUMENT MAY BE PUNISHABLE AS A FELONY UNDER FEDERAL STATUTES
- MATERIAL DID NOT COME INTO CONTACT WITH MERCURY/ASBESTOS CONTAMINATION AT VSF

CERTIFICATION

VULCAN STEAM FORGING CO.
247 RANO STREET
P.O. BOX 87
BUFFALO, NY 14207
Phone: (716) 875-3680 • Fax: (716) 875-3226

INGERSOLL-RAND COMPANY
P. O. BOX 2375
DAVIDSON, NC 28036

Date 01/12/23
PO # 30014868-143-1B-22
B/L # 19376
SO # 9387-1B
INV # 8784
11552-1.2

We hereby certify that the following is a true copy of data, furnished by the mill producer or from tests performed in approved laboratories and conforms to requirements of any specifications listed.

HEAT G28816K07 **GRADE** 15-5 VAR

C	Mn	P	S	Si	Cr	V	Ni	Mo	Cu	Ta
00.046	00.61	00.020	00.002	00.34	14.74	00.09	04.59	00.40	03.32	<0.01

Sn	Cb	Ti	B	N	W	Co
00.007	00.33	00.01	00.001	00.018	<0.05	<0.05

Al <0.01

QUANTITY	DESCRIPTION	SPECIFICATIONS
5	RM TO SIZE 5.00"DIA X 2.00"LG AAR1793307-01011 FORGING RATIO 13.20:1	AAMS-0102 QTC 5 DIA X 6 LG SMPLS LONGITUDINAL QTC BHN SAME AS BAR

HARDNESS	THERMAL TREATMENT			
BHN 341	SOLN ANLD	1900F/ 3.50 HR AC/MTHD 1	R/T CHARPY IMPACTS	102.0
	AGED	1075F/ 7.00 HR AC/MTHD 1		116.0
				113.0
	UT PER IL-600 = ACCEPTABLE		AVG	110.3

MECHANICAL PROPERTIES:

TENSILE PSI	YIELD PSI	% ELONG		% R.A.
160,450	158,210	15.0	(in 2")	63.4

VULCAN STEAM FORGING CO.

By: Kathie Mus
Certification Analyst

- THE RECORDING OF FALSE, FICTITIOUS OR FRAUDULENT STATEMENTS OR ENTRIES ON THIS DOCUMENT MAY BE PUNISHABLE AS A FELONY UNDER FEDERAL STATUTES
- MATERIAL DID NOT COME INTO CONTACT WITH MERCURY/ASBESTOS CONTAMINATION AT VSF

MO 11/2

Ingersoll Rand
338 Valley Rd
Mocksville, NC 27028

DOCUMENT 3: HYDROSTATIC TEST: CASTING

Date:	02/08/2024
Customer:	Air Products
User:	Air Products
Compressor Model:	TA3000
Customer Order Number:	4505773730
Compressor Serial Number:	22590

TO WHOM IT MAY CONCERN:

Ingersoll Rand hereby certifies the airside of the gearbox passed its hydrostatic tests per AAIL-2568.

- Stage 1,2 held at 300 PSIG for a minimum of 15 minutes
- Stage 3 held at 300 PSIG for a minimum of 15 minutes

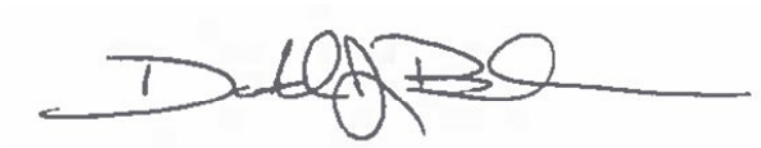

Donald J Bauch
PAC Quality Engineer
Ingersoll Rand

普什联动科技有限公司
PUSH LINKO TECHNOLOGY CO.,LTD.
ADD.5#HUANYANG,YUEJIANG YIBIN,SICHUAN,CHINA
ZIP:645152 TEL:(0831)5352019 FAX:(0831)5352002

HYDRO TEST SHEET

水压测试表

PURCHASE ORDER 订单号 #: 30016280-60

PART 产品图号 # AAP3793809-00360

SERIAL NUMBER of Base: 箱体毛坯编号 PF23021512

SERIAL NUMBER of Cover: 箱盖毛坯编号 23011122

HYDROSTATIC TEST STANDARD PRESSURE 水压测试标准压力：≥2.1MPa

BEGINNING TEST PRESSURE 开始时压力 2.2MPa

ENDING TEST PRESSURE 结束时压力 2.2MPa

DURATION OF TEST 保压时间 30min

GAGE # OF PRESSURE GAGE 压力表编号 HC71580788441

CALIBRATION DUE DATE 压力表校准到期日期 2023.04.27

ACCEPT 合格 √ **REJECT 不合格____**

TESTED BY 操作 陈晓东 **DATE 日期 20230331**

INSPECTED BY 审核 阳忠平 **DATE 日期 20230331**

普什联动科技有限公司
PUSH LINKO TECHNOLOGY CO.,LTD.
ADD.5#HUANYANG,YUEJIANG YIBIN,SICHUAN,CHINA
ZIP:645152 TEL:(0831)5352019 FAX:(0831)5352002









普什联动科技有限公司
PUSH LINKO TECHNOLOGY CO.,LTD.
ADD.5#HUANYANG,YUEJIANG YIBIN,SICHUAN,CHINA
ZIP:645152 TEL:(0831)5352019 FAX:(0831)5352002





Ingersoll Rand
338 Valley Rd
Mocksville, NC 27028

DOCUMENT 4: CONTROL PANEL FUNCTIONAL CERTIFICATE

Date:	02/08/2024
Customer:	Air Products
User:	Air Products
Compressor Model:	TA3000
Customer Order Number:	4505773730
Compressor Serial Number:	22590

TO WHOM IT MAY CONCERN:

Ingersoll Rand certifies the control panel was tested in accordance with our standard process. If so equipped, the compressor is tested using the contract control panel. Otherwise, a test control panel is utilized. The panel is powered by either a 120 or 240V power supply. All the safety and process monitoring capabilities are enabled during testing.



Donald J Bauch
PAC Quality Engineer
Ingersoll Rand

Ingersoll Rand
338 Valley Rd
Mocksville, NC 27028

DOCUMENT 5: LUBE SYSTEM CLEANLINESS CERTIFICATE

Date:	02/08/2024
Customer:	Air Products
User:	Air Products
Compressor Model:	TA3000
Customer Order Number:	4505773730
Compressor Serial Number:	22590

TO WHOM IT MAY CONCERN:

Ingersoll Rand hereby certifies the lube system tubing was clean and free of contamination / debris during the assembly process.



Donald J Bauch
PAC Quality Engineer
Ingersoll Rand

Ingersoll Rand
338 Valley Rd
Mocksville, NC 27028

DOCUMENT 6: OIL SYSTEM FUNCTIONAL (LEAK) TEST CERTIFICATE

Date:	02/08/2024
Customer:	Air Products
User:	Air Products
Compressor Model:	TA3000
Customer Order Number:	4505773730
Compressor Serial Number:	22590

TO WHOM IT MAY CONCERN:

Ingersoll Rand hereby certifies the subject oil system was functionally tested with hot oil (105° F-115° F) in accordance with company requirements. No leakage was found.



Donald J Bauch
PAC Quality Engineer
Ingersoll Rand

Ingersoll Rand
338 Valley Rd
Mocksville, NC 27028

DOCUMENT 7: CERTIFICATE OF QUALITY

Date:	02/08/2024
Customer:	Air Products
User:	Air Products
Compressor Model:	TA3000
Customer Order Number:	4505773730
Compressor Serial Number:	22590

TO WHOM IT MAY CONCERN:

Ingersoll Rand hereby certifies the subject equipment was inspected and is accepted in accordance with Ingersoll Rand Quality Inspection Procedures.



Donald J Bauch
PAC Quality Engineer
Ingersoll Rand

Ingersoll Rand
338 Valley Rd
Mocksville, NC 27028

DOCUMENT 8: CERTIFICATE OF COMPLIANCE

Date:	02/08/2024
Customer:	Air Products
User:	Air Products
Compressor Model:	TA3000
Customer Order Number:	4505773730
Compressor Serial Number:	22590

TO WHOM IT MAY CONCERN:

Ingersoll Rand hereby certifies the subject equipment satisfies requirements of the applicable specifications, procedures, and drawings as noted in the submitted data transmitted to and approved by your company.



Donald J Bauch
PAC Quality Engineer
Ingersoll Rand

Ingersoll Rand
338 Valley Rd
Mocksville, NC 27028

DOCUMENT 9: U-1 FORMS

Date:	02/08/2024
Customer:	Air Products
User:	Air Products
Compressor Model:	TA3000
Customer Order Number:	4505773730
Compressor Serial Number:	22590

TO WHOM IT MAY CONCERN:

This certificate is not required.



Donald J Bauch
PAC Quality Engineer
Ingersoll Rand

Ingersoll Rand
338 Valley Rd
Mocksville, NC 27028

DOCUMENT 10: DRIVER TEST CERTIFICATE

Date:	02/08/2024
Customer:	Air Products
User:	Air Products
Compressor Model:	TA3000
Customer Order Number:	4505773730
Compressor Serial Number:	22590

TO WHOM IT MAY CONCERN:

Ingersoll Rand hereby certifies the drive motor is supplied and mounted by Ingersoll Rand. Refer to attached motor test documents.



Donald J Bauch
PAC Quality Engineer
Ingersoll Rand

Ingersoll Rand
338 Valley Rd
Mocksville, NC 27028

DOCUMENT 11: QUALITY VERIFICATION REPORT

QUALITY FORM Ingersoll Rand 501 Sanford Ave Mocksville, NC 27028				
TITLE: Quality Verification Report		Issuing Department: Quality Assurance		
APPROVED: P. Syracuse	PREPARED: H. Belter			

		Comments
1. Radial tip clearance – all stages	☑	
2. Aero acceptance	☑	
3. Paint coverage acceptable	☑	
4. All openings and instrumentation holes are plugged	☑	
5. Safety and lifting labels installed	☑	
6. National Board number of pressure vessels recorded	☐	NA
7. Visual inspection of unit	☑	
8. Final scope verification	☑	



Donald J Bauch
PAC Quality Engineer
Ingersoll Rand

Ingersoll Rand
338 Valley Rd
Mocksville, NC 27028

DOCUMENT 12: STANDARD OR FULLY INSTRUMENTED CERTIFICATE OF TEST

Date:	02/08/2024
Customer:	Air Products
User:	Air Products
Compressor Model:	TA3000
Customer Order Number:	4505773730
Compressor Serial Number:	22590

TO WHOM IT MAY CONCERN:

Ingersoll Rand hereby certifies the compressor assembled and tested by Ingersoll Rand per the Plant Air Compressor Test Procedure. See attached mechanical test / design point data (Document 13). Ingersoll Rand complies with test work instruction TP-2100-18-001, Rev 10. See attached for relevant test procedure (Document 14).



Donald J Bauch
PAC Quality Engineer
Ingersoll Rand

Compression Technologies and Services
501 Sanford Ave Mocksville,
NC 27006 USA

Standard Compressor Package
Certificate of Test

Document Number: 12

Contract No.: 22590

Customer: APCI

Model: TA-3000

Aerodynamic Rating
809.9 HP
120 PSI,G
3222 OSCFM, DRY
3555 RPM

Design Conditions
Barom. Press.: 14.7 PSI,A
Inlet Press.: 14.4 PSI,A
Inlet Air Temp.: 105 °F
Inlet H_2O Temp.: 80 °F

Type of test: ☐ Standard ☒ Fully Instrumented ☐ Mechanical only

The following items were checked as part of the tests, and are certified to have met the acceptance criteria of Ingersoll Rand Compression Technology and Services Test Procedure TP-2100-18-001.

☒ Lube oil system, operation and integrity.
☒ Cooling water system, operation and integrity.
☒ Electrical system (including control panel if applicable), operation and integrity.
☒ Vibration monitoring system operation and machine vibration levels
☒ Aerodynamic performance levels.



12/15/2023

Certified by

Test Date

Ingersoll Rand TA Test Data

Contract #: _ 22590 **Model:** 3000 **Test Date:** 12/15/2023

Units	Test Data Point #:	1	2	3	4	5		Unloaded
psi	Discharge Pressure	142.5	191.8	103.7	150.4	114.5		
	S3 P Tap	2.3	1.7	2.7	2.3	2.6		
	S3 Inlet Temp	112	111	106	106	105		
	1X	0.24	0.24	0.24	0.24	0.24		0.25
	1Y	0.19	0.19	0.19	0.19	0.19		0.24
	2X	0.21	0.22	0.22	0.22	0.22		0.12
	2Y	0.21	0.21	0.21	0.21	0.21		0.18
	3X	0.09	0.10	0.10	0.10	0.10		0.19
	3Y	0.12	0.13	0.13	0.12	0.13		0.22
	Oil Pressure	120.2	120.7	120.5	120.2	120.5		
	Oil Temp	124	1242	124	124	124		
	Motor Stator A	100	129	137	143	148		
	Motor Stator B	100	133	142	150	156		
	Motor Stator C	101	132	141	148	155		
	Motor DE Bearing	149	170	175	178	181		
	Motor NDE Bearing	148	163	165	166	166		
	S1 Water	126	121	119	119	118		
	S2 Water	123	117	115	116	118		
	S3 Water	109	104	101	103	101		
	Amps	115	118	112	116	113		35
	RPM:							

Ingersoll Rand 4 Hour Test Data

Contract #: _ 22590 **Model:** 3000 **Test Date: 12/15/23**

Units	Test Data Point #:	3:00	3:20	3:40	4:00	4:20	4:40	5:00	5:20	5:40	6:00	6:20	6:40	7:00
	Discharge Pressure	143.6	142.5	135.2	191.8	103.7	150.4	114.5	114.7	147.1	147.2	147.1	147.1	147.1
	S3 P Tap	2.4	2.3	2.4	1.7	2.7	2.3	2.6	2.6	2.3	2.3	2.3	2.3	2.3
	S3 Inlet Temp	105	112	111	107	106	106	105	104	112	109	112	112	110
	1X	0.24	0.24	0.24	0.24	0.24	0.24	0.24	0.24	0.25	0.25	0.25	0.25	0.24
	1Y	0.19	0.19	0.19	0.19	0.19	0.19	0.19	0.19	0.19	0.19	0.19	0.19	0.19
	2X	0.21	0.21	0.21	0.22	0.22	0.22	0.22	0.22	0.22	0.22	0.22	0.22	0.22
	2Y	0.21	0.21	0.21	0.21	0.21	0.21	0.21	0.21	0.21	0.21	0.21	0.21	0.21
	3X	0.09	0.09	0.09	0.10	0.10	0.10	0.10	0.10	0.10	0.10	0.10	0.10	0.10
	3Y	0.12	0.12	0.12	0.13	0.13	0.12	0.13	0.13	0.12	0.13	0.13	0.13	0.12
	Oil Pressure	121.0	120.2	119.6	120.7	120.5	120.2	120.5	120.6	119.8	120.2	119.6	119.8	120.1
	Oil Temp	121	124	124	124	124	124	124	124	125	124	125	124	124
	Motor Stator A	82	100	114	129	137	143	148	151	155	156	158	159	160
	Motor Stator B	82	100	115	133	142	150	156	160	164	165	168	168	169
	Motor Stator C	82	101	115	132	141	148	155	158	62	164	166	167	169
	Motor DE Bearing	126	149	160	170	175	178	181	183	184	185	186	186	187
	Motor NDE Bearing	127	148	158	163	165	166	166	167	168	168	168	168	168
	S1 Water	119	126	125	121	119	119	118	118	139	126	129	129	130
	S2 Water	115	123	121	117	115	116	118	114	134	123	126	126	124
	S3 Water	103	109	107	104	101	103	101	100	114	108	111	110	109
	Amps	116	115	114	116	112	116	113	114	116	117	116	116	116
	RPM:	3576	3576	3576	3576	3576	3576	3576	3576	3576	3576	3576	3576	3576

FFT Analyzer 2019.vi
C:\Users\tts\Documents\TA TTS 2021\TA TTS 202106\FFT Analyzer 2019.vi
Last modified on 6/9/2021 at 8:06 AM
Printed on 12/15/2023 at 3:58 PM

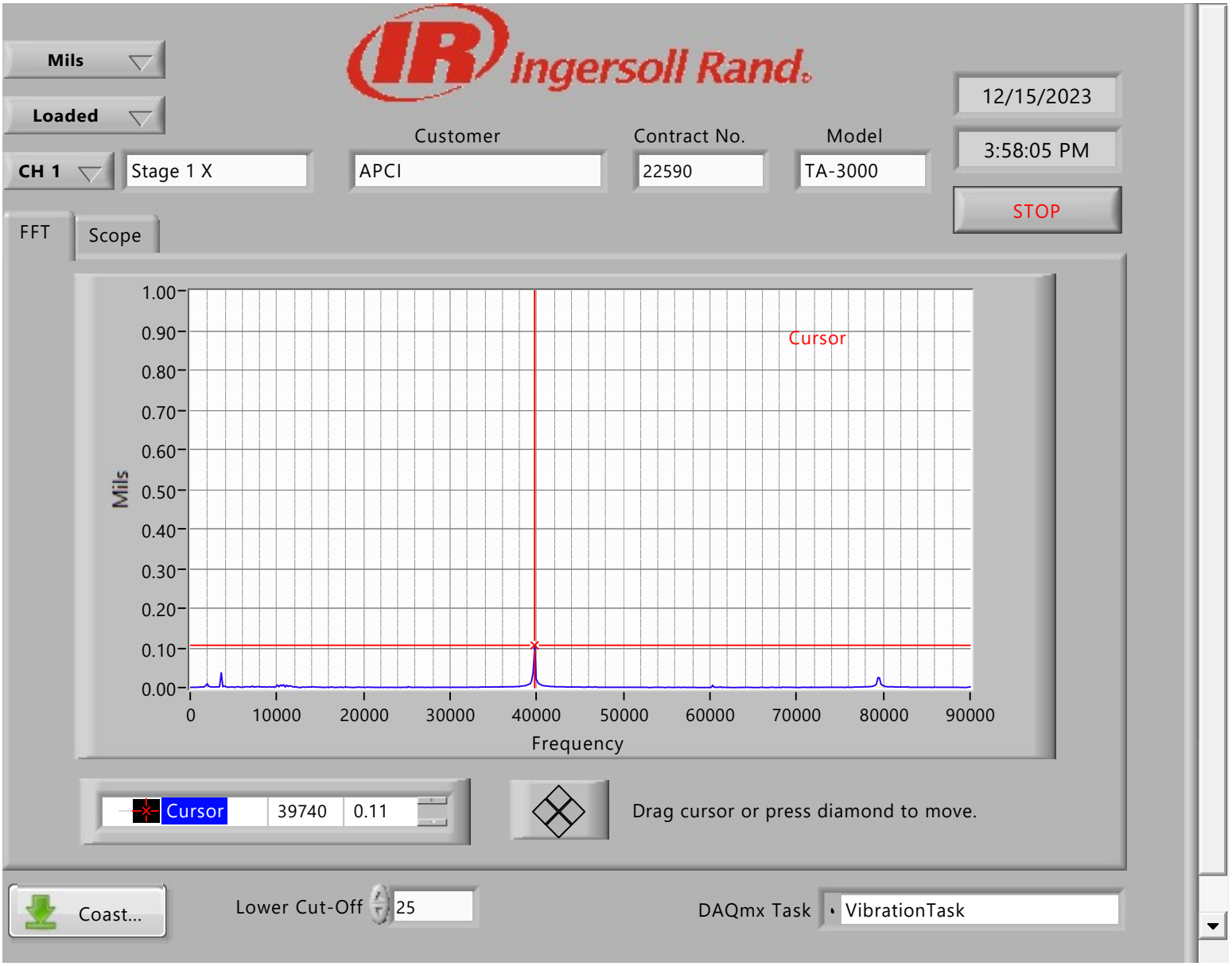

FFT Analyzer 2019.vi
C:\Users\tts\Documents\TA TTS 2021\TA TTS 202106\FFT Analyzer 2019.vi
Last modified on 6/9/2021 at 8:06 AM
Printed on 12/15/2023 at 6:37 PM

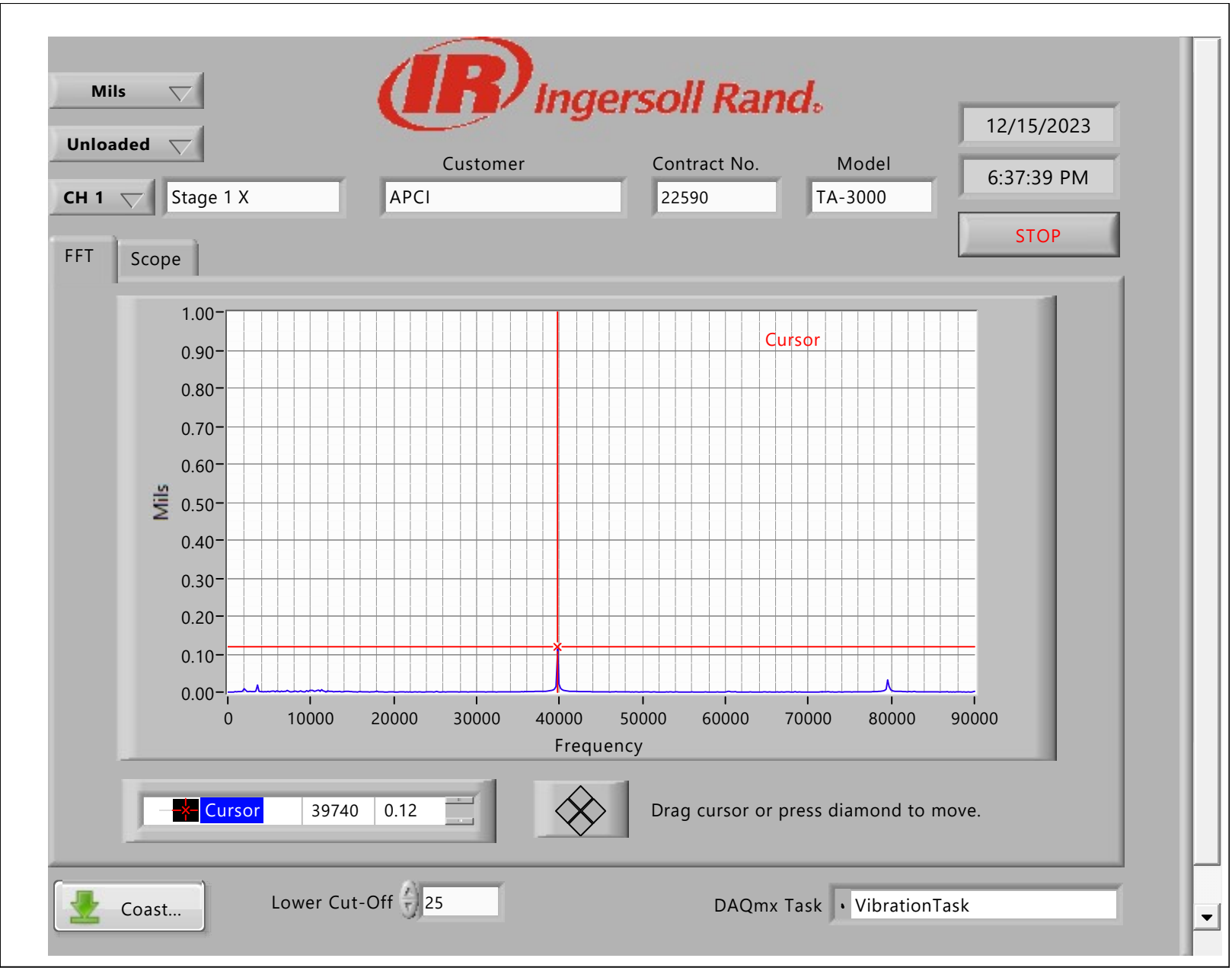

FFT Analyzer 2019.vi
C:\Users\tts\Documents\TA TTS 2021\TA TTS 202106\FFT Analyzer 2019.vi
Last modified on 6/9/2021 at 8:06 AM
Printed on 12/15/2023 at 5:00 PM

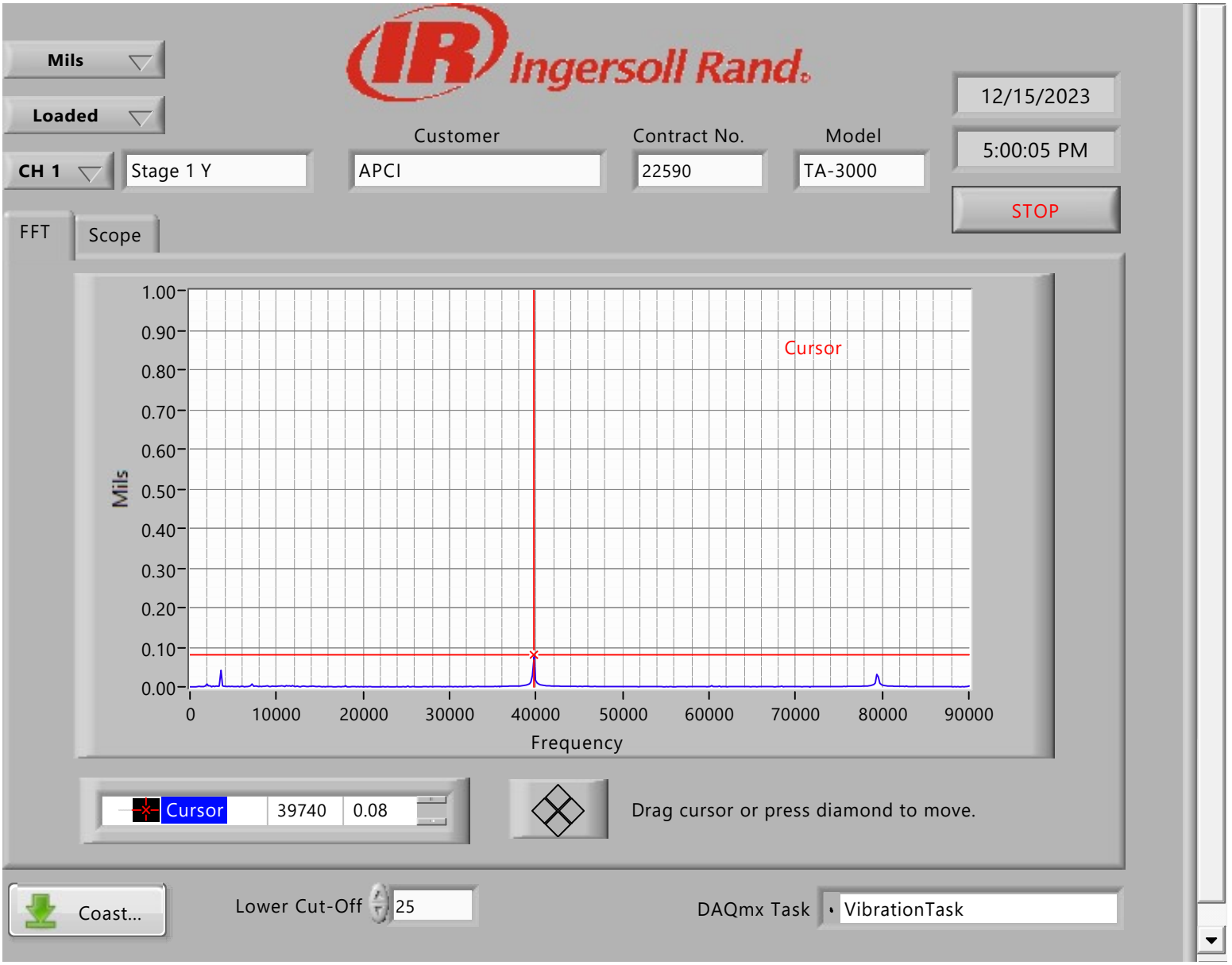

FFT Analyzer 2019.vi
C:\Users\tts\Documents\TA TTS 2021\TA TTS 202106\FFT Analyzer 2019.vi
Last modified on 6/9/2021 at 8:06 AM
Printed on 12/15/2023 at 6:36 PM

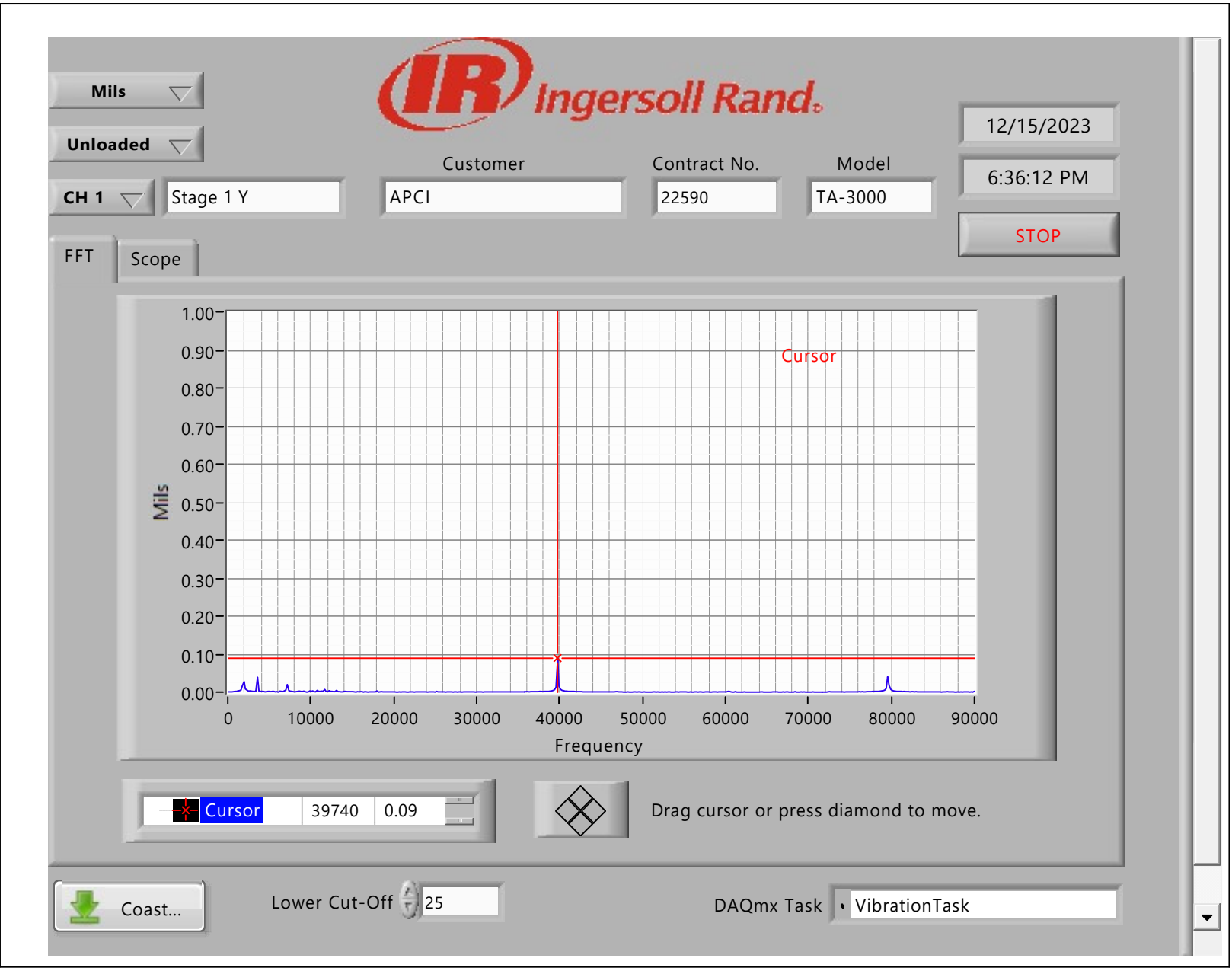

Coast Down Vibration Monitor
C:\Users\tts\Documents\TA TTS 2021\TA TTS 202106\vibration\Coast Down\Coast Main.vi
Last modified on 6/9/2021 at 8:06 AM
Printed on 12/15/2023 at 7:03 PM

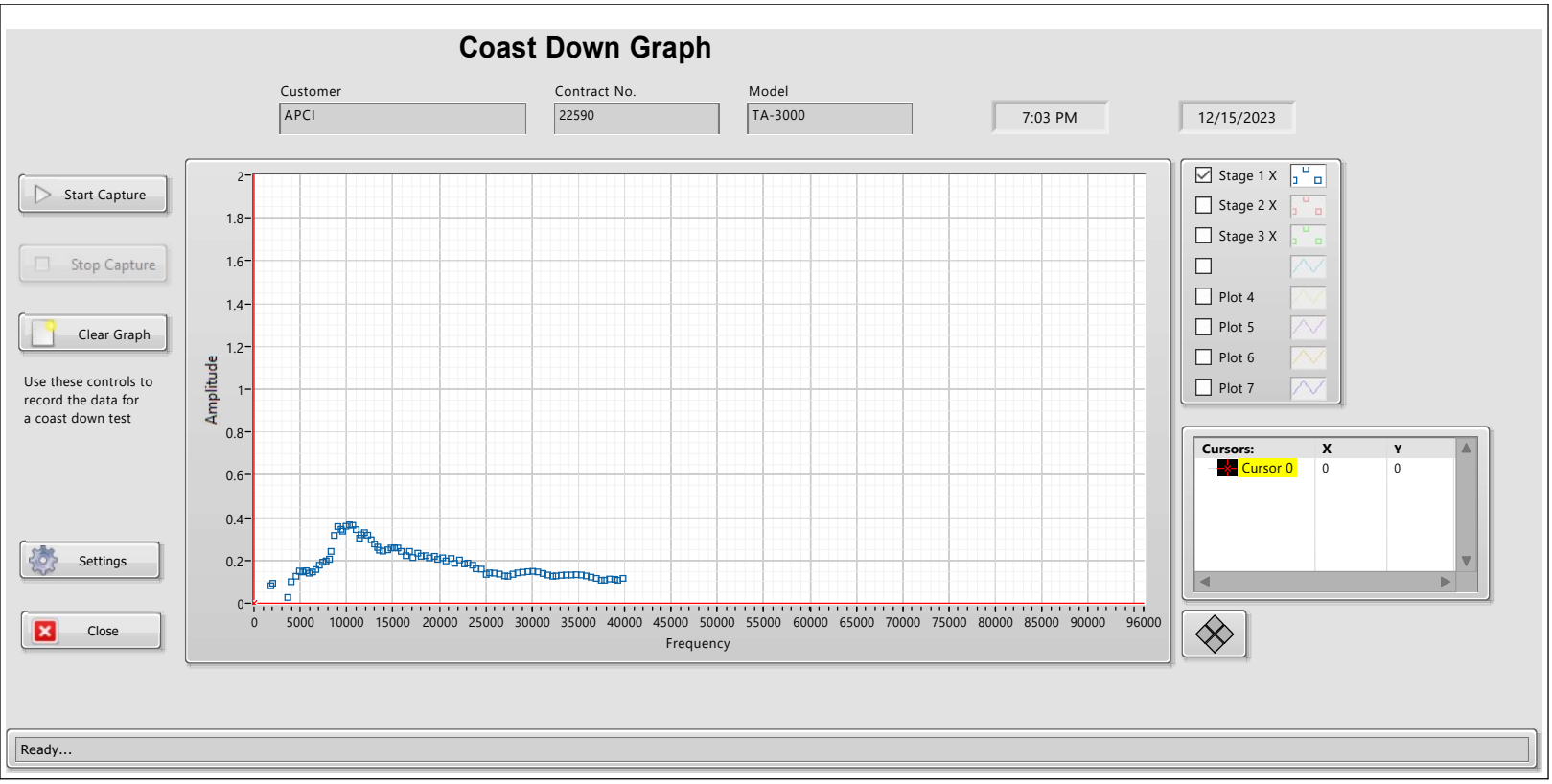

Coast Down Vibration Monitor
C:\Users\tts\Documents\TA TTS 2021\TA TTS 202106\vibration\Coast Down\Coast Main.vi
Last modified on 6/9/2021 at 8:06 AM
Printed on 12/15/2023 at 7:07 PM

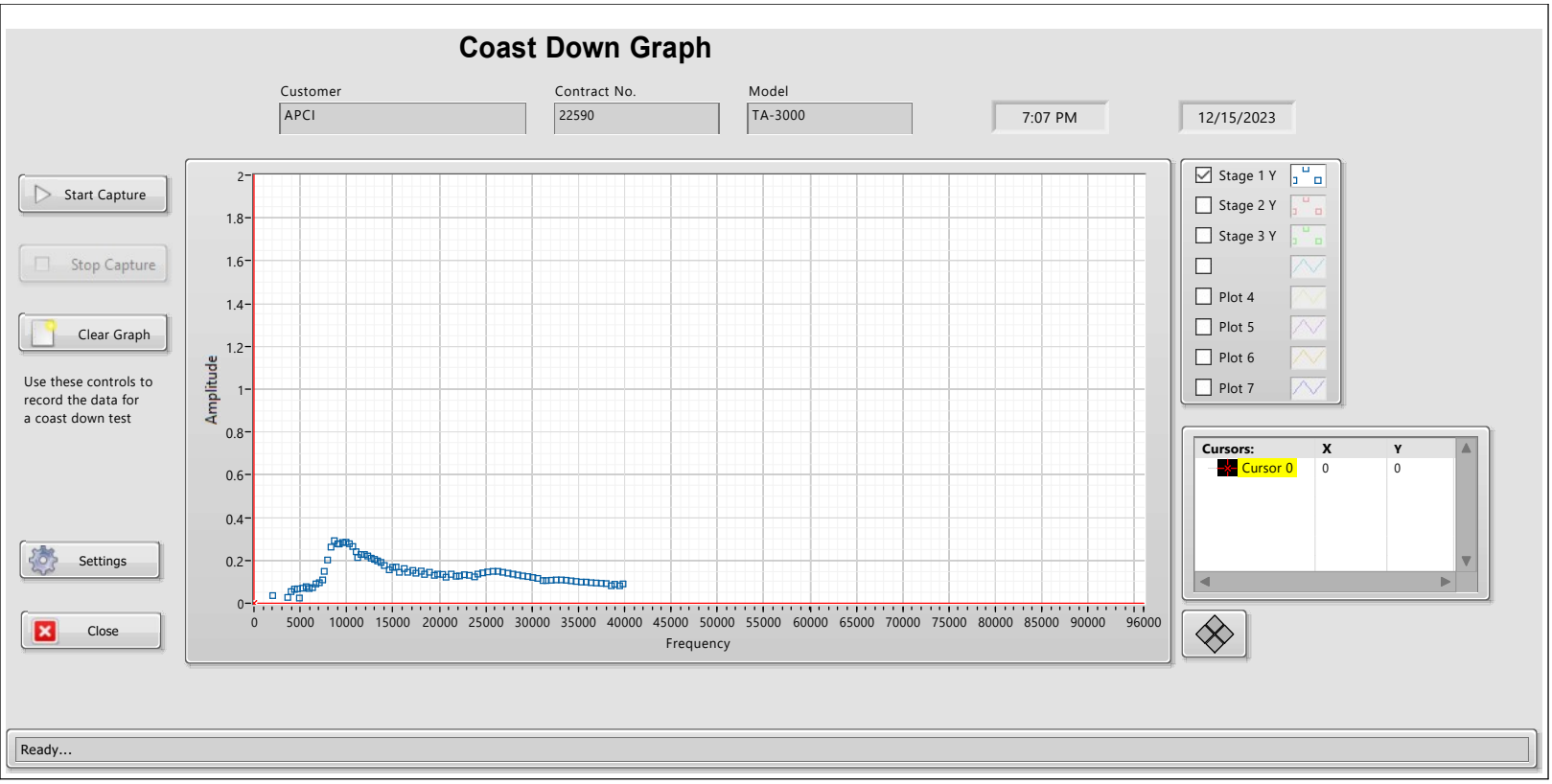

FFT Analyzer 2019.vi
C:\Users\tts\Documents\TA TTS 2021\TA TTS 202106\FFT Analyzer 2019.vi
Last modified on 6/9/2021 at 8:06 AM
Printed on 12/15/2023 at 3:58 PM

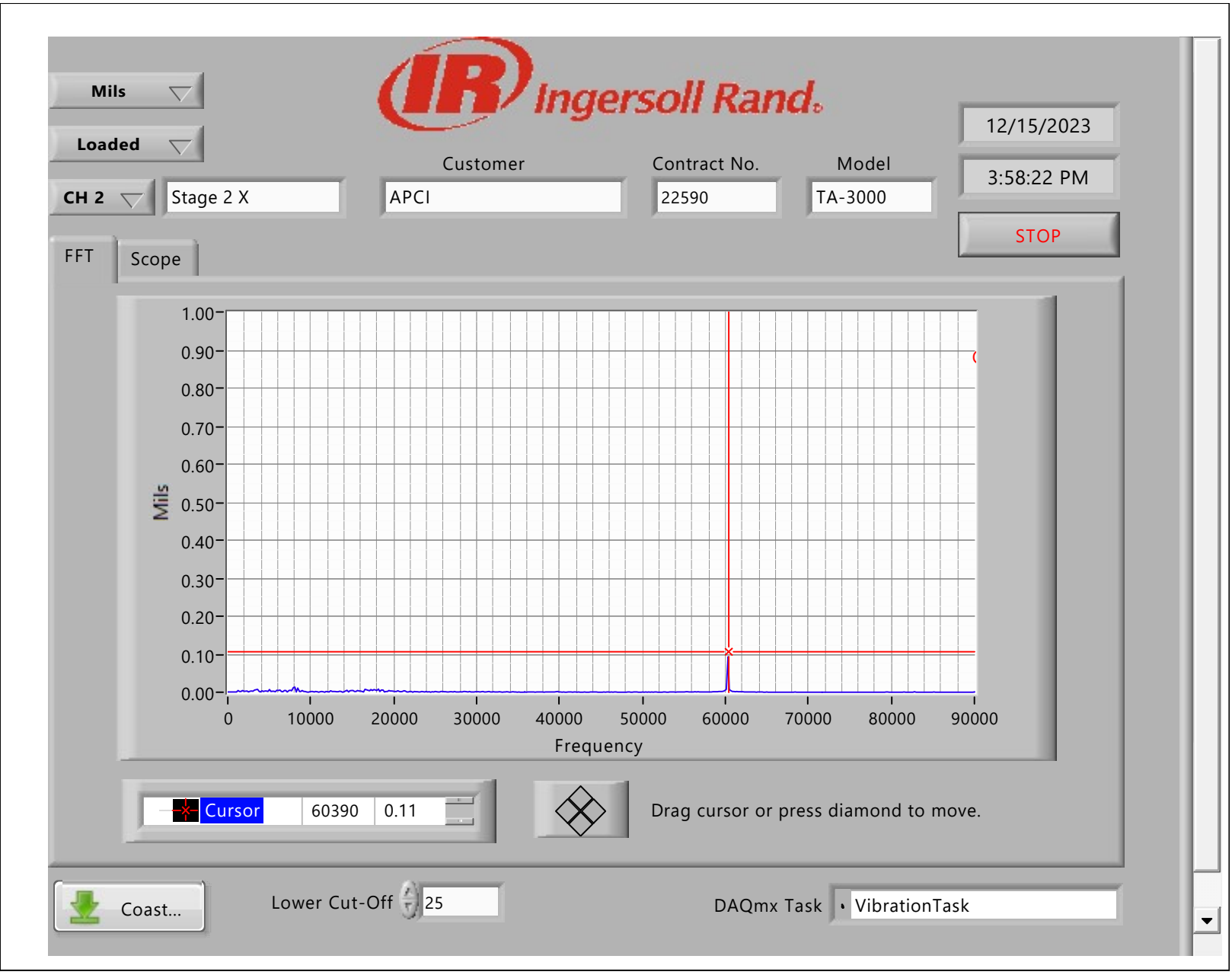

FFT Analyzer 2019.vi
C:\Users\tts\Documents\TA TTS 2021\TA TTS 202106\FFT Analyzer 2019.vi
Last modified on 6/9/2021 at 8:06 AM
Printed on 12/15/2023 at 6:38 PM

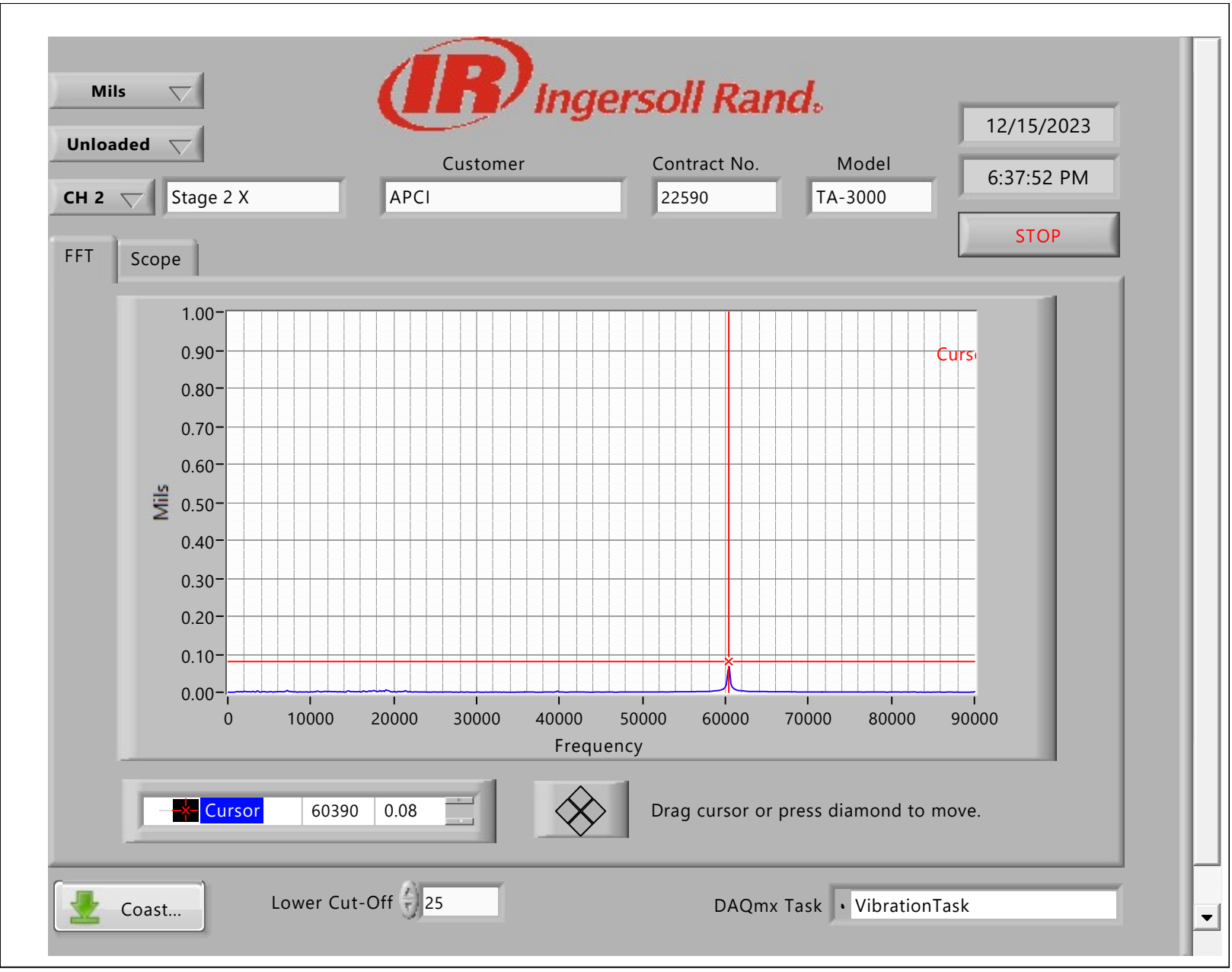

FFT Analyzer 2019.vi
C:\Users\tts\Documents\TA TTS 2021\TA TTS 202106\FFT Analyzer 2019.vi
Last modified on 6/9/2021 at 8:06 AM
Printed on 12/15/2023 at 5:00 PM

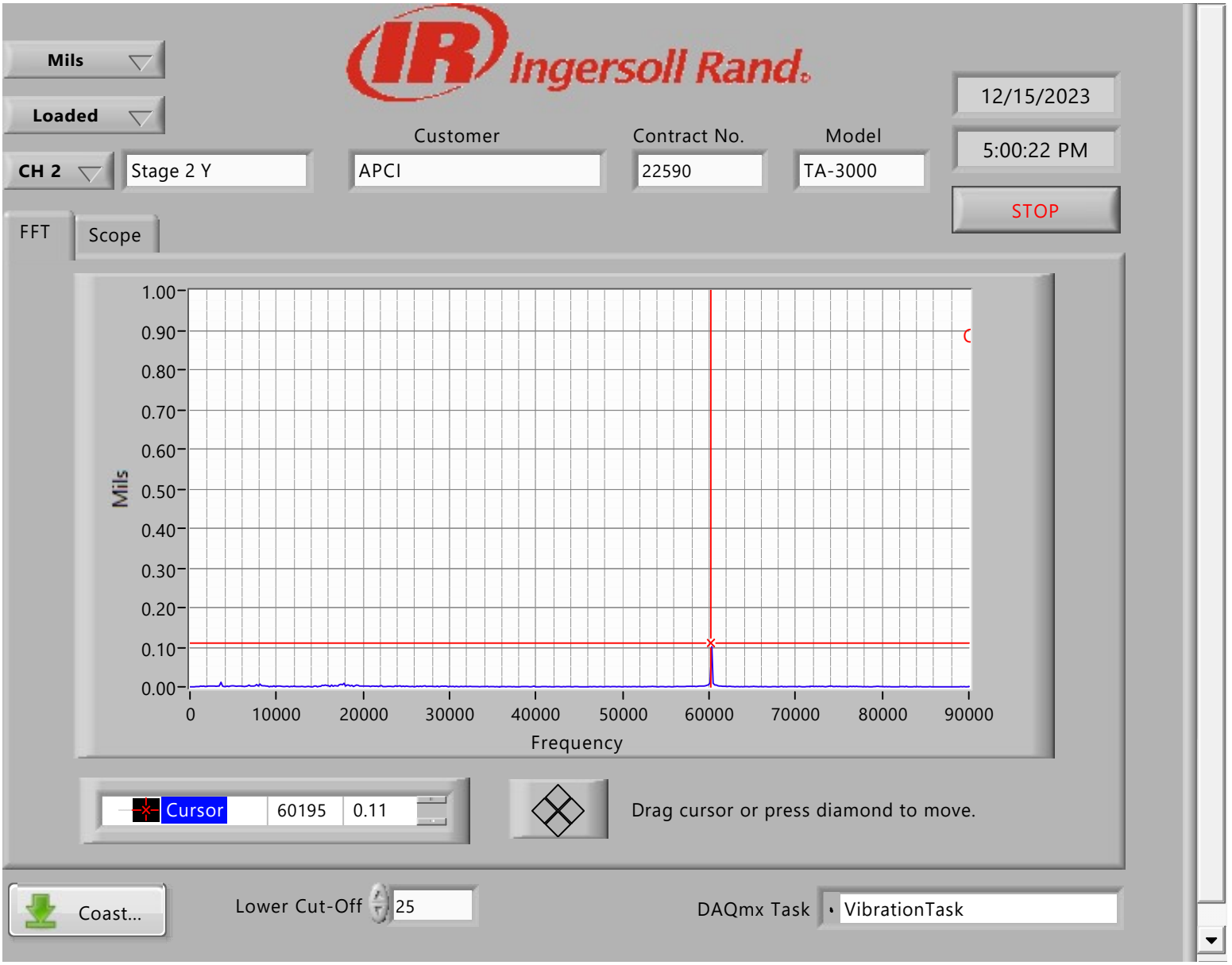

FFT Analyzer 2019.vi
C:\Users\tts\Documents\TA TTS 2021\TA TTS 202106\FFT Analyzer 2019.vi
Last modified on 6/9/2021 at 8:06 AM
Printed on 12/15/2023 at 6:36 PM

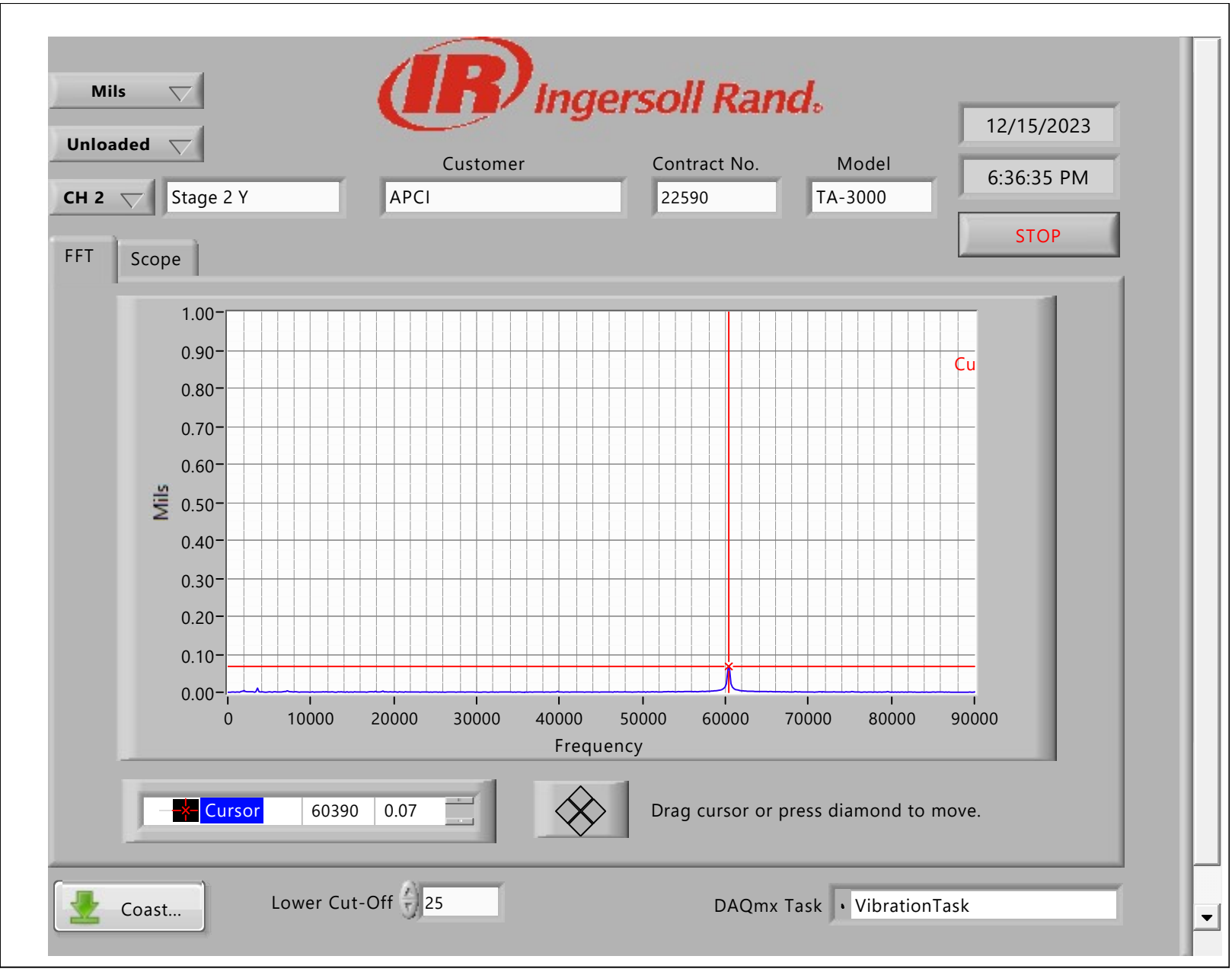

Coast Down Vibration Monitor
C:\Users\tts\Documents\TA TTS 2021\TA TTS 202106\vibration\Coast Down\Coast Main.vi
Last modified on 6/9/2021 at 8:06 AM
Printed on 12/15/2023 at 7:03 PM

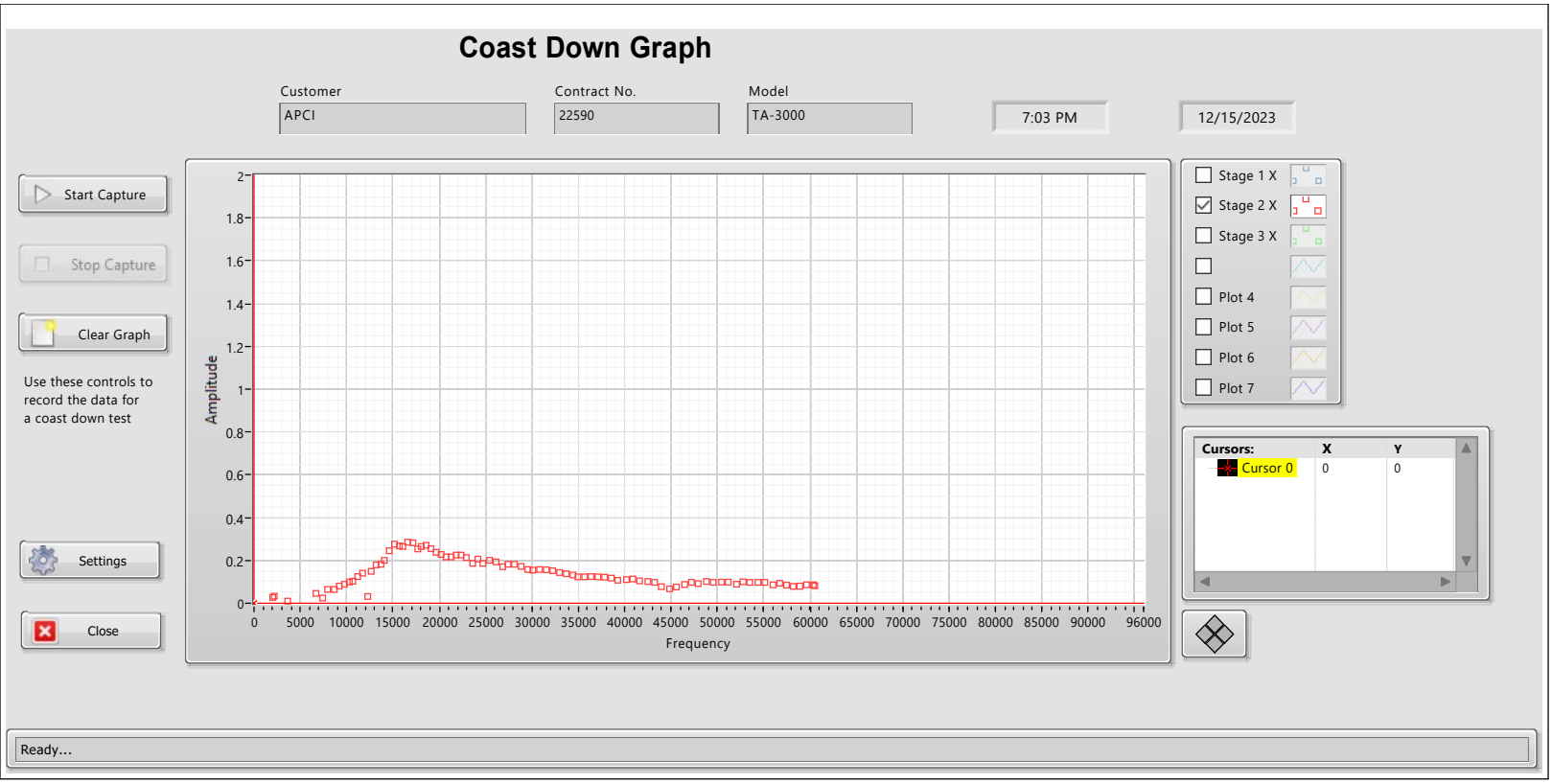

Coast Down Vibration Monitor
C:\Users\tts\Documents\TA TTS 2021\TA TTS 202106\vibration\Coast Down\Coast Main.vi
Last modified on 6/9/2021 at 8:06 AM
Printed on 12/15/2023 at 7:07 PM

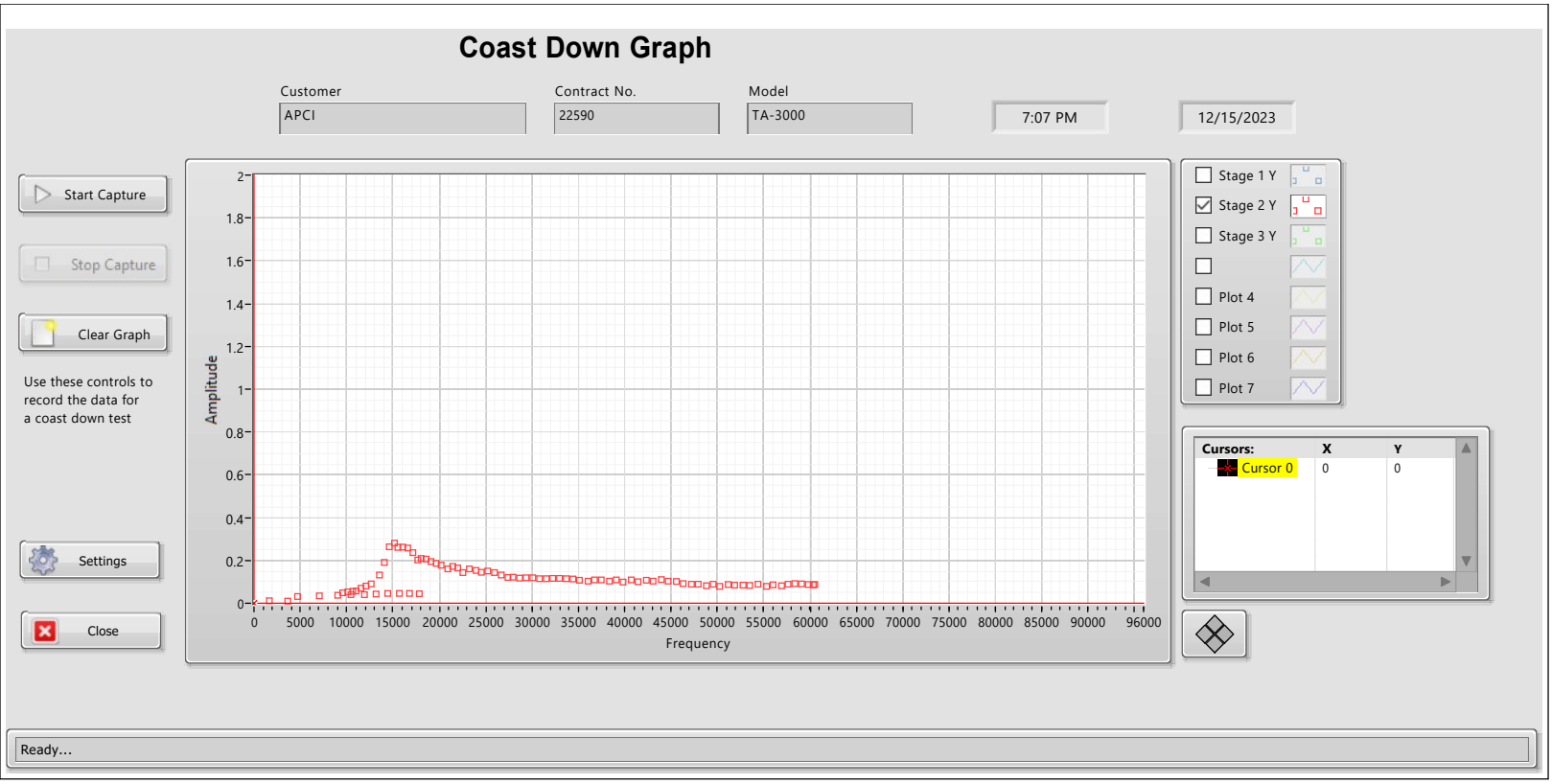

FFT Analyzer 2019.vi
C:\Users\tts\Documents\TA TTS 2021\TA TTS 202106\FFT Analyzer 2019.vi
Last modified on 6/9/2021 at 8:06 AM
Printed on 12/15/2023 at 3:58 PM

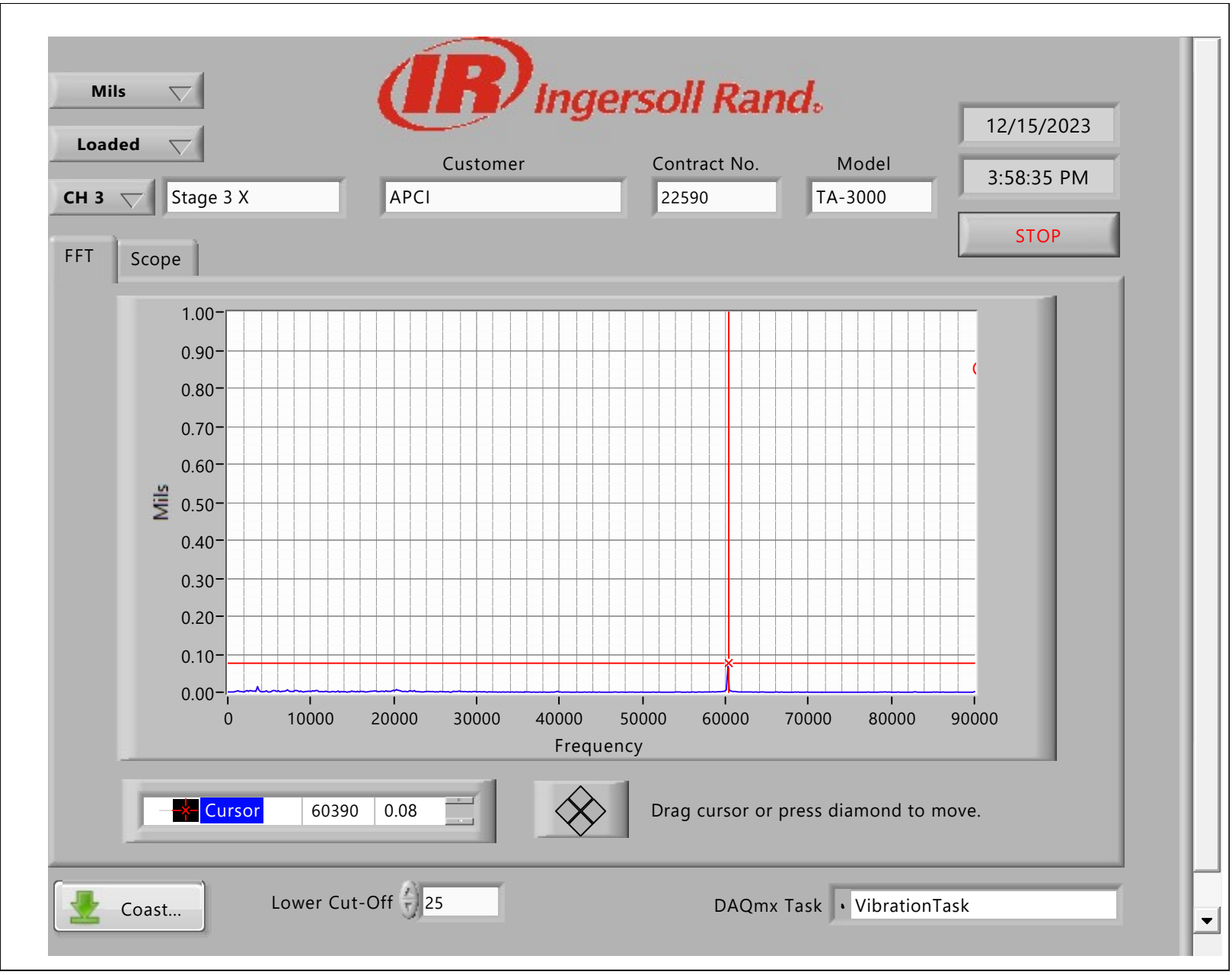

FFT Analyzer 2019.vi
C:\Users\tts\Documents\TA TTS 2021\TA TTS 202106\FFT Analyzer 2019.vi
Last modified on 6/9/2021 at 8:06 AM
Printed on 12/15/2023 at 6:38 PM

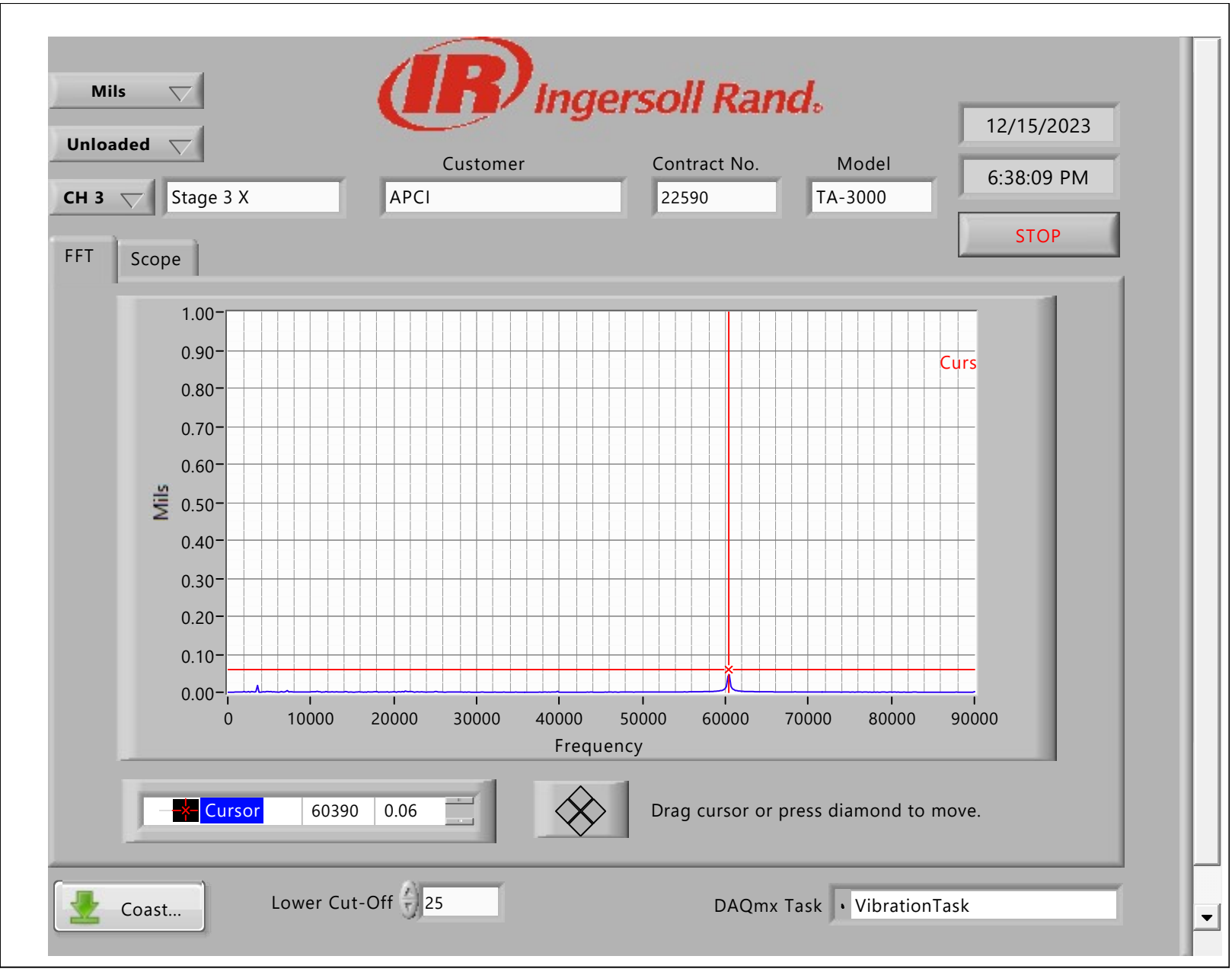

FFT Analyzer 2019.vi
C:\Users\tts\Documents\TA TTS 2021\TA TTS 202106\FFT Analyzer 2019.vi
Last modified on 6/9/2021 at 8:06 AM
Printed on 12/15/2023 at 5:00 PM

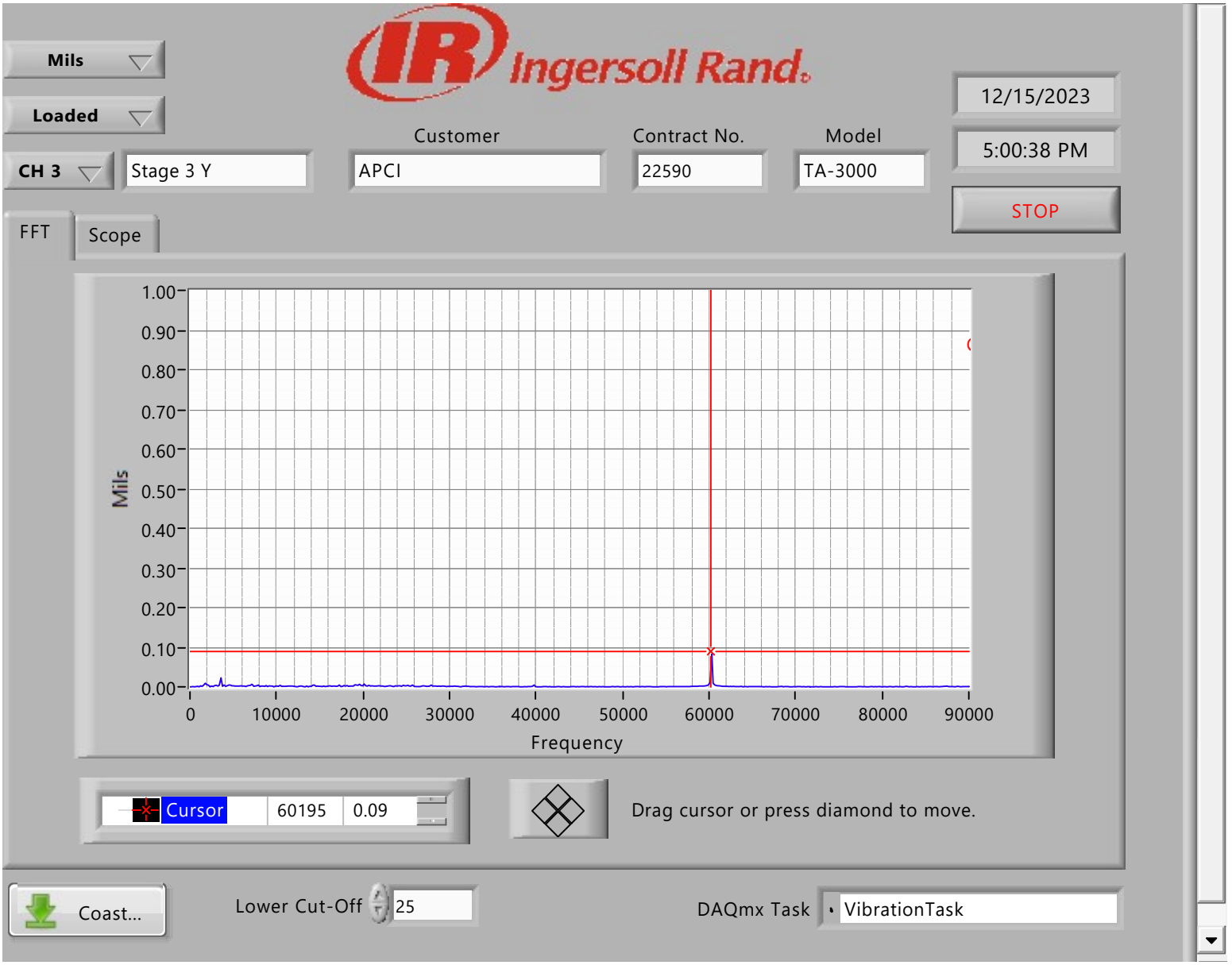

FFT Analyzer 2019.vi
C:\Users\tts\Documents\TA TTS 2021\TA TTS 202106\FFT Analyzer 2019.vi
Last modified on 6/9/2021 at 8:06 AM
Printed on 12/15/2023 at 6:36 PM

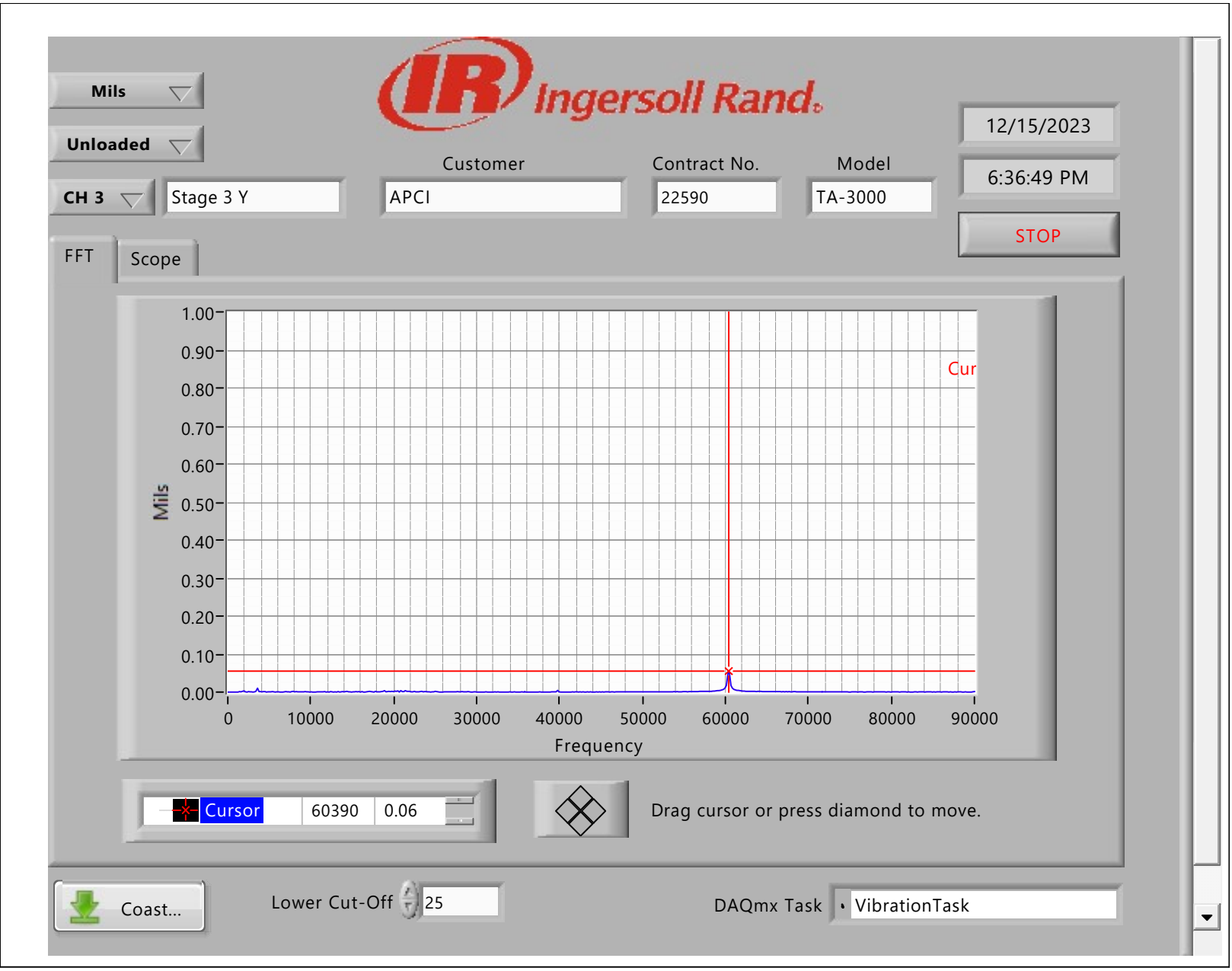

Coast Down Vibration Monitor
C:\Users\tts\Documents\TA TTS 2021\TA TTS 202106\vibration\Coast Down\Coast Main.vi
Last modified on 6/9/2021 at 8:06 AM
Printed on 12/15/2023 at 7:04 PM

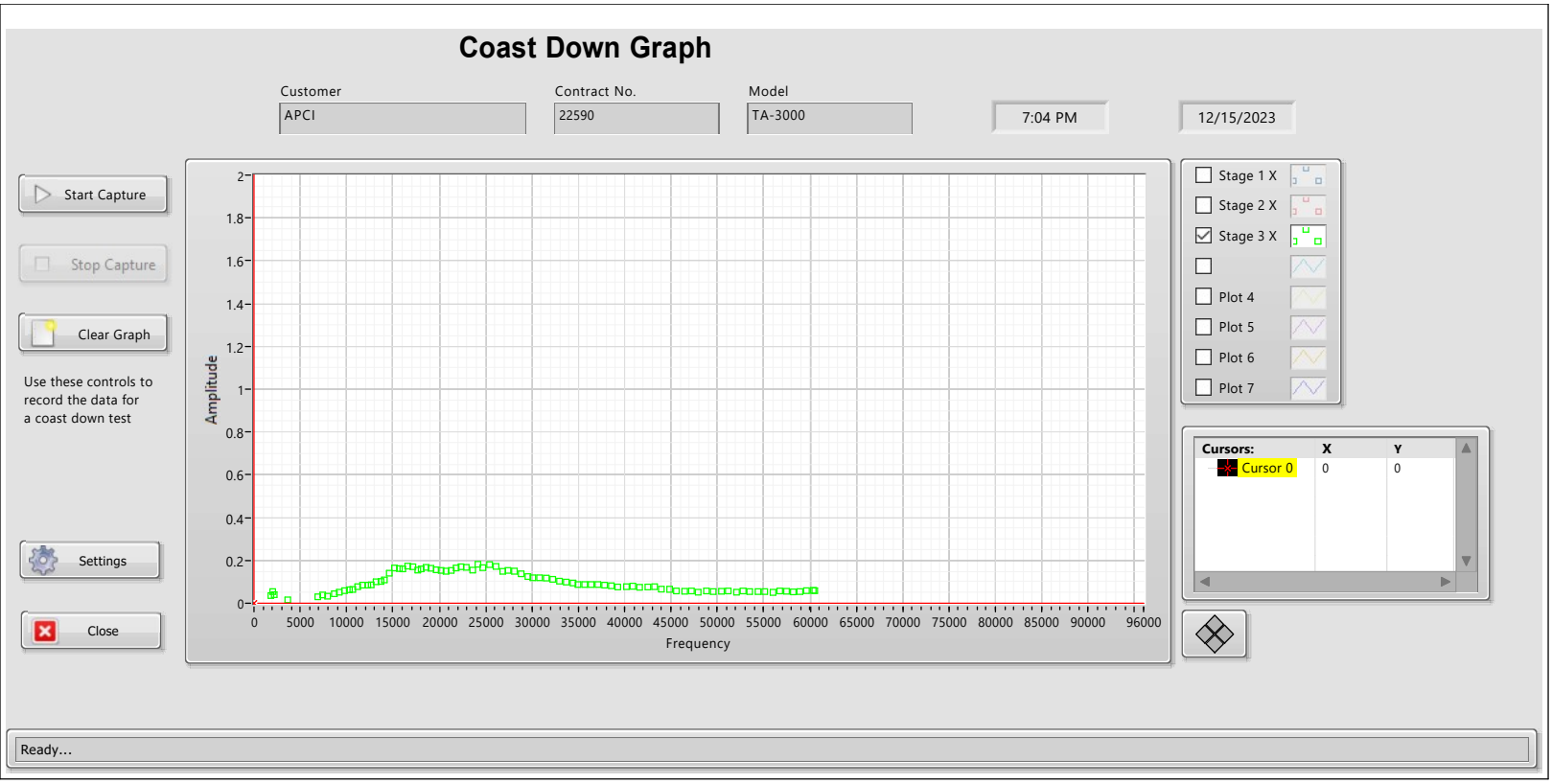

Coast Down Vibration Monitor
C:\Users\tts\Documents\TA TTS 2021\TA TTS 202106\vibration\Coast Down\Coast Main.vi
Last modified on 6/9/2021 at 8:06 AM
Printed on 12/15/2023 at 7:08 PM

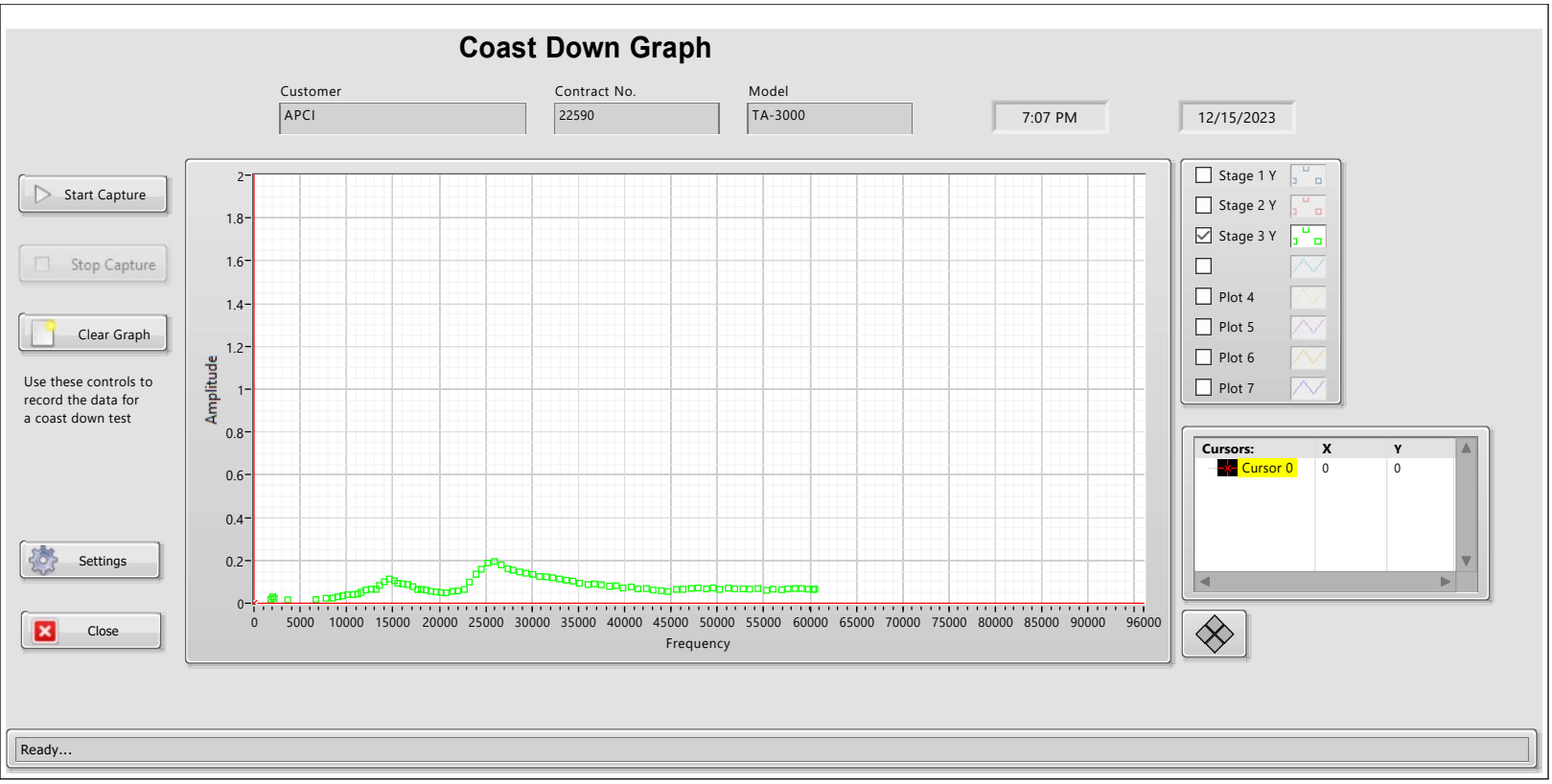

Compression Technologies & Services
501 Sanford Ave
Mocksville N.C. 27028

Title: **Test Procedure for Standard Plant Air Compressors**	Issuing Department: **Manufacturing Engineering**
Document Number: **TP-2100-18-001**	Revision: **12**
	Revision Date: **January 5, 2023**

1.0 Scope

This specification defines the procedures that are followed in testing standard plant air compressors in Mocksville Centrifugal test cells. Plant air compressors include the TA-2000, TA-3000, TA-6000, TA-2040, TA-6040, NX-2500, NX-5000, and NX-8000 compressor models. Also included are the TAC (air cooled) and TDP (dry pack) versions of these lines.

2.0 Overview

The compressor is placed on the test stand, then setup and tested as a complete unit. This includes the contract driver (when possible), control panel, and lube system. All systems are fully operational during testing. Whenever possible, the testing is done with the compressor operating at design speed, inlet air temperature, and intercooler conditions.

The design operating speed is achieved using an electronic variable frequency drive (VFD). A multi-tap output transformer in conjunction with the VFD provides a voltage of 415, 460, 575, 2400, 3300, or 4160 to the AC motor driving the test compressor.

Inlet air at design temperature is provided to a compressor tested by hot air discharging from the compressor being mixed with ambient air, by the use of fans controlled by VFD.

For the TAC units, ambient air is drawn from the room and therefore is not design temperature.

For tests on water cooled compressors, cooling water at design temperature is supplied to the compressor from a valve which mixes hot water returning from the compressor with cold water arriving from a cooling tower. The water flow is monitored with electromagnetic type flow meters.

3.0 Setup

The compressor is placed on the test stand and the appropriate electrical, water, and piping connections are made. The following are more detailed descriptions of the connections.

3.1 Electrical

The compressor is tested using the contract driver, when possible. In cases when the contract driver cannot be used, an Ingersoll-Rand -supplied test motor is installed. On units designed for 60 Hz with a packaged starter and a 460 or 575 volt drive motor, the starter is used to start the unit. For all other units, the compressor is started with and powered by an electronic VFD.

3.2 Lube System

The compressor is tested using the contract lube system. The unit reservoir is filled to the appropriate level with a high quality grade turbine oil. All system components including the reservoir, pumps, filter, relief valves, air ejector, and coolers are fully operational during testing.

On units with accumulator tanks, the tank is checked to ensure proper pre-charge pressure.

Oil pump starters (if equipped) are only used on 60 Hz applications operating 460 or 575v.

3.3 Control Panels

If so equipped, the compressor is tested using the contract control panel. Otherwise, a test control panel is utilized. The panel is powered by either a 110, 220 or 460 volt supply. All the safety and process monitoring capabilities are enabled during testing.

4.0 Testing

There are two types of aerodynamic tests conducted on plant air compressors. One is a 'standard aero test', and the other is a 'custom aero test'.

4.1 Standard Aero Test

This type of test is performed on compressors with standard aerodynamic components which are considered by Ingersoll-Rand to be of a proven design and are rated at Ingersoll-Rands'domestic standard' conditions. This type of test is performed on most plant air compressors.

A minimum of (2) RTD's, 90° apart are used to measure temperatures at the compressor inlet. On TA-3000, TA-6000, and NX compressors these are located in the setup piping approximately three pipe diameters from the compressor inlet. On TA-2000 compressors RTD's are placed in the first stage inlet elbow. Pressure is measured by a minimum of (2) total pressure probes, 90° apart, and symmetrically opposed 45° from the RTD's. The probes are located $^1/_2$ pipe diameter upstream of the RTD's. No interstage data is collected during this type of test.

Mass flow rate is determined by use of differential pressure transducers reading the static pressure drop across an orifice plate. The plates are used in orifice meter runs of nominal 3", 4", or 6" diameters. A static pressure tap and two RTDs located in the orifice run provide the entering air conditions to the plate. Figure 1 shows a schematic diagram of the instrumentation and setup details for a typical standard test.

The test consists of a minimum of 2 points; design and surge. For compressors that require level I or level II documentation, the test consists of a minimum of 5 data points taken over the compressor's operating range. A valve located in the discharge piping is used to regulate flow and pressure, creating the typical curve shown in Figure 2. The points are taken at intervals spaced as evenly as possible, with one data point taken near design pressure, one at choke, and one at actual surge. The compressor is allowed to stabilize at each point for a period of fifteen minutes or until a state of thermal equilibrium is reached. During conditions of high ambient humidity, the intercoolers are drained of condensate after each data point is taken.

4.2 Fully Instrumented Aero Test

A 'fully instrumented aero test' is conducted on any unit which is designed and guaranteed at conditions other than Ingersoll-Rand's 'domestic standard'. In addition, a fully instrumented aero test is conducted on any plant air compressor that is a new design and has not had enough empirical data to be considered 'proven'.

In this case, the unit is fully equipped with instrumentation for interstage data collection so that the individual stage characteristics can be determined. A minimum of 5 data points are taken over the compressor's operation range. The setup and methods of the custom aero test are otherwise identical to those of the standard aero test.

4.3 Mechanical Test

In addition to aerodynamic data, mechanical data is collected at each point along the curve. Standard mechanical data includes:

-Vibration on all stages
-Supply Lube Oil Temperature
-Main Oil Pressure
-Discharge Pressure
-Final Stage Inlet Temperature

Any other mechanical data not specified above will not be collected unless the instruments have been purchased by the customer. If any of the mechanical data does not meet the acceptance levels specified by Engineering, the test will be stopped and the problem corrected.

Refer to:
EDR-H-107 TA-2020
EDR-H-026 TA-2000
EDR-H-031 TA-3000
EDR-H-049 TA-6000
EDR-H-103 TA-9000
EDR-H-113 TA-2030, TA-2040
EDR-H-115 TA-6040
EDR-H-103 TA-9000
EDR-H-117 ASD Compressors
EDR-H-112 NX-12000
EDR-H-116 NX-8000
EDR-H-120 NX-5000
EDR-H-124 NX-2500

5.0 Instrumentation

The instrumentation used during testing is shown below. For internal use only, unless otherwise specified.

MEASUREMENT	INSTRUMENT LOCATION	INSTRUMENT TYPE	READING LOCATION
Air Temperature	Inlet and discharge pipes	Four wire platinum RTD	Computer screen of data acq.
Air Pressure - Static	On upstream orifice flange	SP tap connected to press. transducer	Computer screen of data acq.
Air Pressure - Total	Inlet and discharge pipes	TP probe connected to press. transducer.	Computer screen of data acq.
Discharge / System Air Pressure	Unit air discharge pipe	SP tap connected to contract pressure transducer	Unit contract panel
H_2O Temp. (not incl. TAC's)	Cooler inlet piping at H2O mixing valve	Temperature gauge	(at instrument)
H_2O Flowrate (not incl. TAC's)	Intercooler supply piping	Electromagnetic type flowmeter	(at instrument)
Oil Temperature	Piping, downstream of auxiliary oil pump	Three wire contract RTD	Unit contract panel
Oil Pressure	Piping, downstream of auxiliary oil pump	SP tap connected to contract press. trans.	Unit contract panel
Vibration	Pinion bearings, vertical direction	Eddy current type displacement probes	Unit contract panel
Reservoir Vacuum	On oil tank	Magnehelic pressure gauge	(at instrument)
Air Mass Flowrate	Machined orifice in discharge piping	SP taps connected to differential pressure transducer.	Computer screen of data acq. system
Motor Current	Around one motor lead	Inductive current transformer	Unit contract panel

Test Work Instruction

Title: **Test Procedure for Standard Plant Air Compessors**	Issuing Department: **Test Engineering**
Document Number: **TP-2100-18-001**	Revision: **12**
	Revision Date: **January 5, 2023**

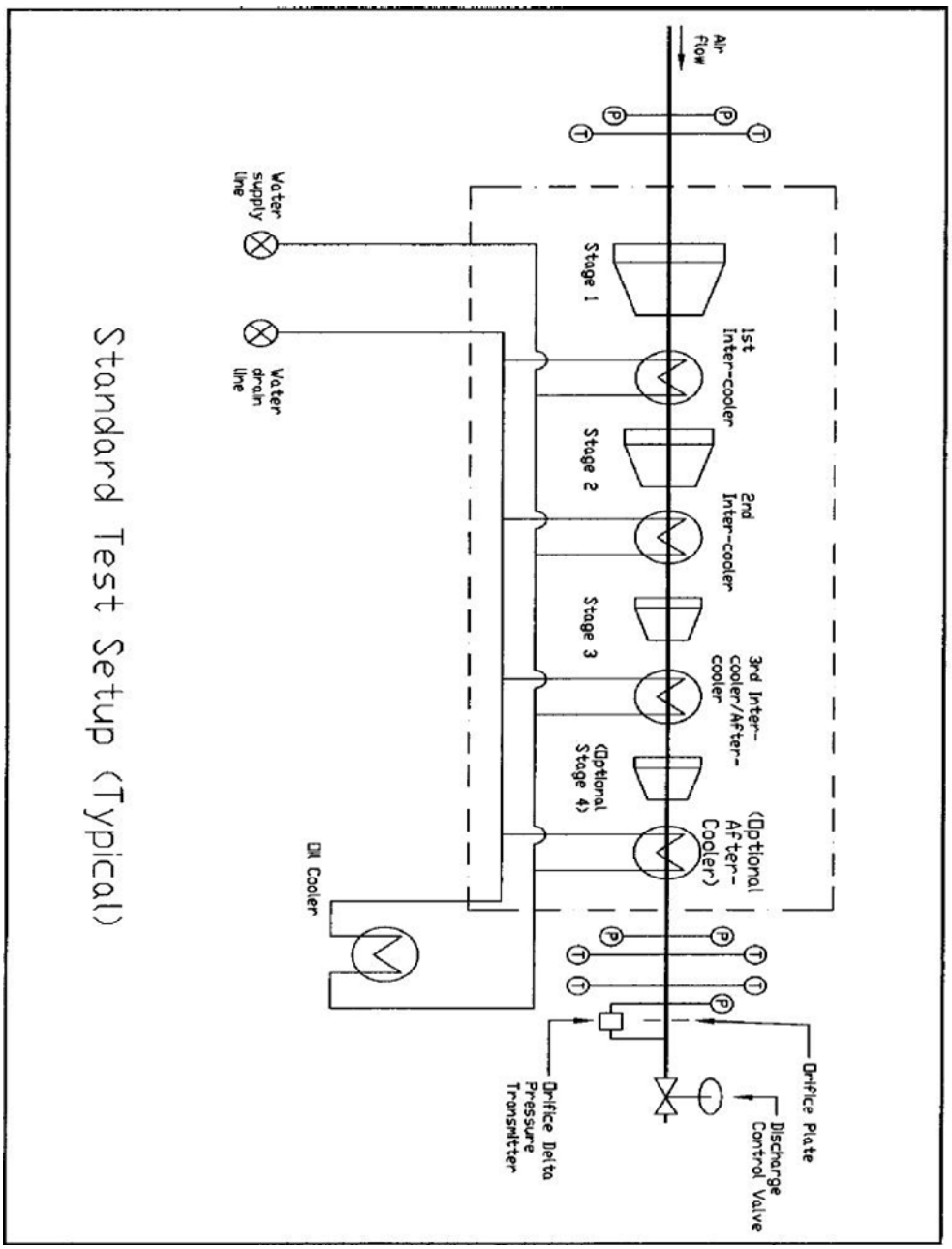

FIGURE 1

Figure 2: Typical Plot of Aerodynamic Results

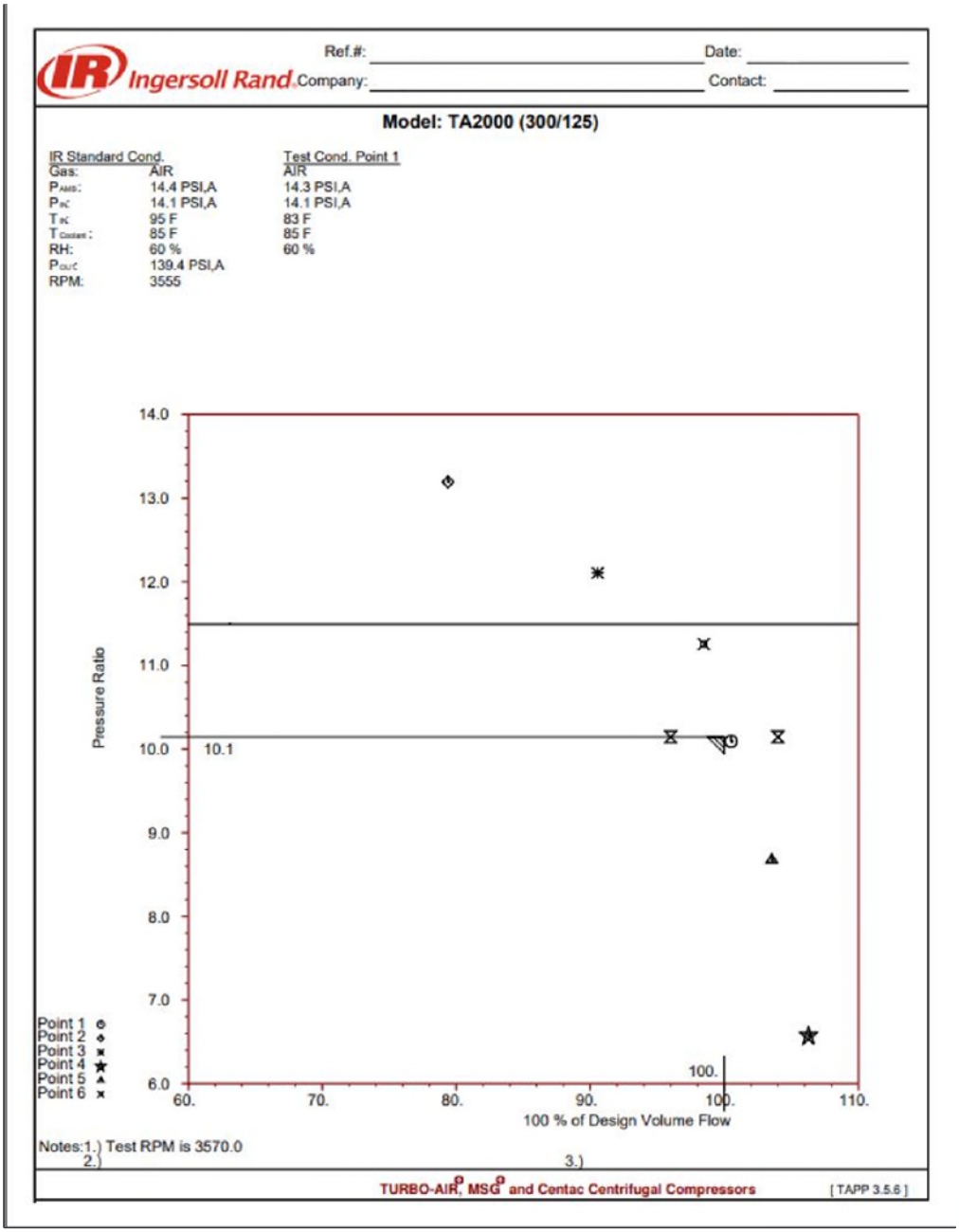

Revision Log for TP-0001

Rev.#	Description of change	Date revised	Initiator
01	Added references to TA-3000's; grammatical revisions to various sections; added panel alarm/trip levels to Fig.3.	19-Aug-98	BB
02	Added references to TA-6000's, and TAC and TDP versions of the designs.	10-Oct-01	BB
03	Revised section 4 to no longer require 'custom aero tests' on all TAC's and all TDP's.	30-July-02	BB
04	Revised header and page layout.	04-April-05	TA
05	Revised header, added TA2020 Testing. Corrected referenced EDR's	15-Dec-08	GBM
06	Revised mechanical sheet. Add 2-point aero test	04-Feb-09	DDS
07	Added EDR's for TA-2040's and TA-6040's. Revised Figure 1 and 3.	02-Dec-10	MB
08	Revised header from Cameron to Ingersoll-Rand	26-Jan -16	JMJ
09	4.0 Changed custom aero to fully instrumented 4.3 Reorganized the EDR's and included NX Machines	10-Apr-18	JD

Compression Technologies & Services
501 Sanford Ave
Mocksville N.C. 27028

Test Work Instruction

Title: Test Procedure for Standard Plant Air Compressors	Issuing Department: **Test Engineering**
Document Number: **TP-2100-18-001**	Revision: **12**
	Revision Date: **January 5, 2023**

10	Revised header from Buffalo to Mocksville (2.0) Changed power options for Mocksville test capabilities. Revised water and inlet temperature control operations	16-July-19	JS
11	Changed power options for addition of VFD in Mocksville. (2.0 &3.1) Figure 2 changed from volume flow program to goal post TAPP. Removed blank data sheet (figure 3) Elaborate on test instruments used in test (4.3 & 5.0)	27-Aug-2020	JS
12	Added NX 2500 and 5000 to Scope (1.0)	5-Jan-2023	JS