REVISION HISTORY					
ZONE	REV	ECO NO	DESCRIPTION	DATE	APPROVED
------	01	4573269	REDRAWN IN NX & SYNC WITH SAP MATERIAL MASTER	2013/10/29	EJZ/SRC
------	02	4573345	THIS DRAWING SUPERSEDES AAP379809-0240DG. CHANGE THE MOUNTING SIDE SLOT FROM 1.06" MAX. TO 1.42" MAX. ADDED BASLINE FOR COOLER SURFACE MACHINING CALL OUT. NOTE 1 REVISED AND SITE NOW 720.33' WAS 28.34 COOLER DEPTH DIMEN ADDED & NOTE 6	2013/11/04	EJZ/SRC
------	03	4753986	CORRECTED 5/16 C'BORE TO BE FROM BOTTOM OF G/B COVER (DETAIL A)	2015/10/02	EJZ/SRC

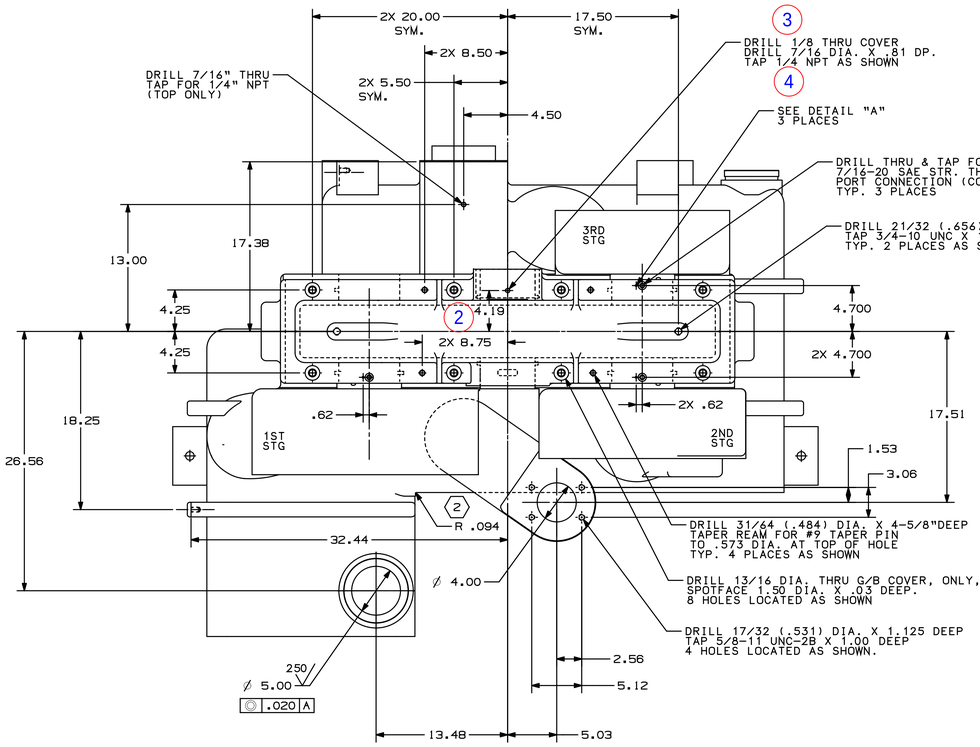

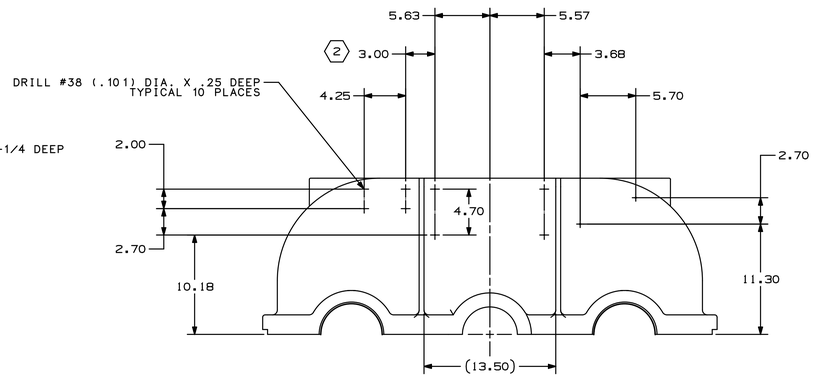

GEARBOX COVER MACHINING
FRONT OF COVER

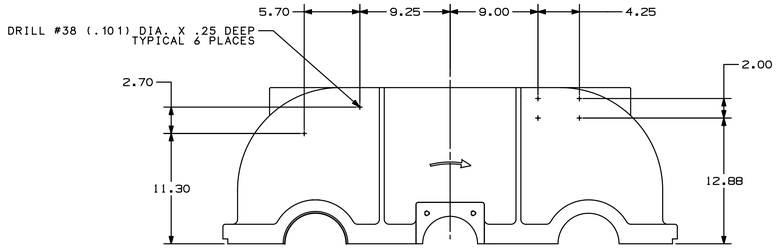

GEARBOX COVER MACHINING
BACK OF COVER

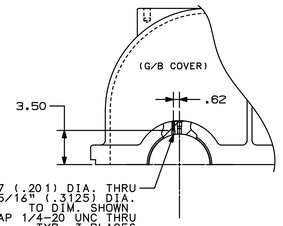

DETAIL "A"

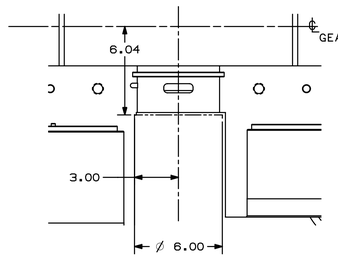

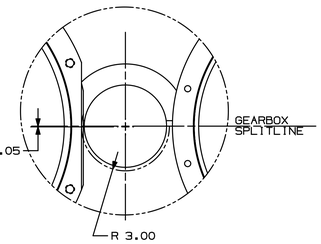

DETAIL "C"

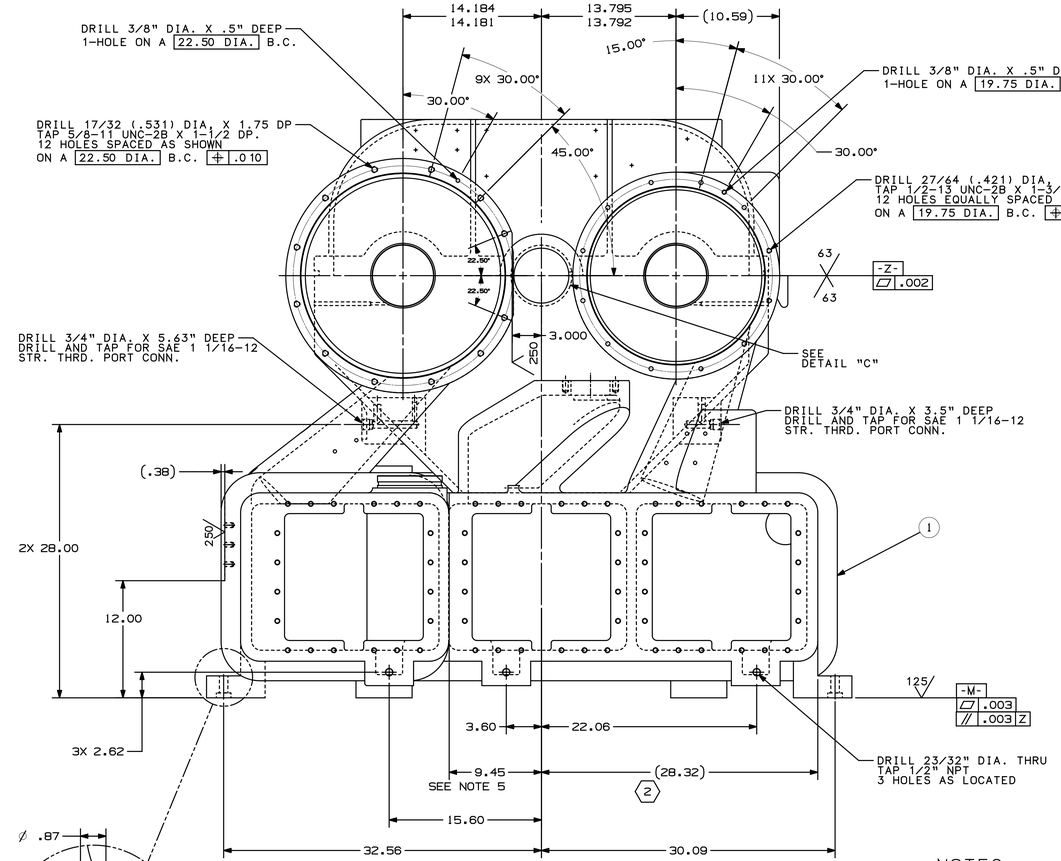

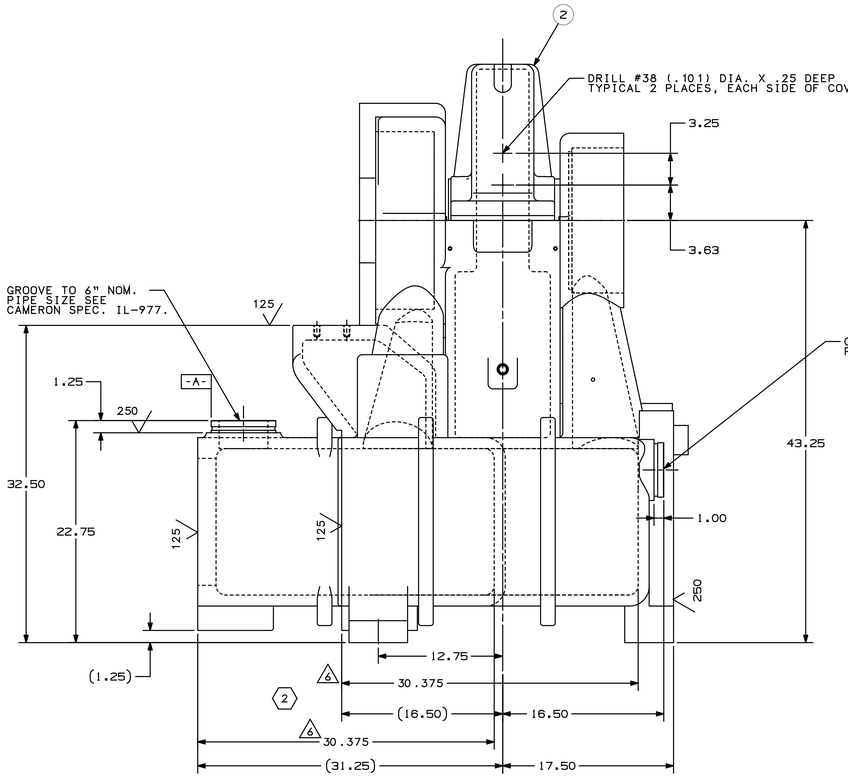

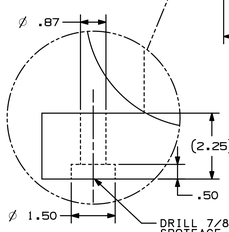

NOTES:

1. INITIAL MACHINING TO BE STARTED USING SURFACE Z.
2. TORQUE SPLITLINE BOLTS TO 125-150 FT-LBS PRIOR TO MACHINING (THREADS TO BE LUBRICATED WITH MOLYKOTE).
3. BREAK SHARP EDGES AT .03
4. THIS DWG. USED IN CONJUCTION WITH CAMERON SPEC. IL-977, PIPE GROOVING.
5. SURFACE MUST BE MACHINED TO DIMENSION FOR COOLER ASSEMBLY.
6. COOLER DEPTH TOLERANCE FOR ALL COOLERS TO BE +/- 3/16"

.1 PLACE DECIMAL X.X ±0.06 .2 PLACE DECIMAL X.XX ±0.02 .3 PLACE DECIMAL X.XXX ±0.010 FRACTIONAL CALLOUT X/X ±0.020 FILLETS: .03R-.08R ANGLES: 45° ±1° BREAK CORNERS: .02 X 45° MAX. REMOVE ALL BURRS THIRD ANGLE PROJECTION	DRAFTER: E. ZAGMESTER	DATE 2013/10/29	CAMERON COMPRESSION SYSTEMS
	CHECKER: E. ZAGMESTER	DATE 2013/10/29	GEARBOX_MACHINED_TA3000(60HZ)
	ENGINEER: S. CASE	DATE 2013/10/29	(1ST STG. REDUCED SCROLL)
	APPROVAL: T. MAZIERSKI	DATE 2013/10/29	E NX DRAWING DWG. NO. AAP379380 9-00360DG
	DRAWING PER ASME Y14.5-1994 DIMENSIONS IN INCHES UNLESS OTHERWISE SPECIFIED		SCALE 1:6 [1ST BROADWAY, P.O. BOX 287, BUFFALO, NEW YORK 14225-0287, U.S.A.] SHEET 1 OF 4

DWG NO AAP379380 9-00360DG REV 1

"THIS DRAWING AND THE CONFIDENTIAL TRADE SECRET INFORMATION ON IT ARE THE PROPERTY OF CAMERON. POSSESSION DOES NOT GIVE ANY RIGHT TO DISCLOSE, REPRODUCE OR USE SAME FOR ANY PURPOSE OTHER THAN THAT GRANTED BY EXPRESS WRITTEN PERMISSION OF CAMERON. THIS DRAWING IS TO BE RETURNED TO CAMERON UPON ITS REQUEST OR COMPLETION OF AUTHORIZED USE."

REVISION HISTORY					
ZONE	REV	ECO NO	DESCRIPTION	DATE	APPROVED
———	01	4573269	REDRAWN IN NX & SYNC WITH SAP MATERIAL MASTER	2013/10/29	EJZ/SRC
———	02	4573345	[illegible]	2013/11/04	EJZ/SRC
———	03	4753986	SEE SH 1 FOR CHANGES	2015/10/02	EJZ/SRC

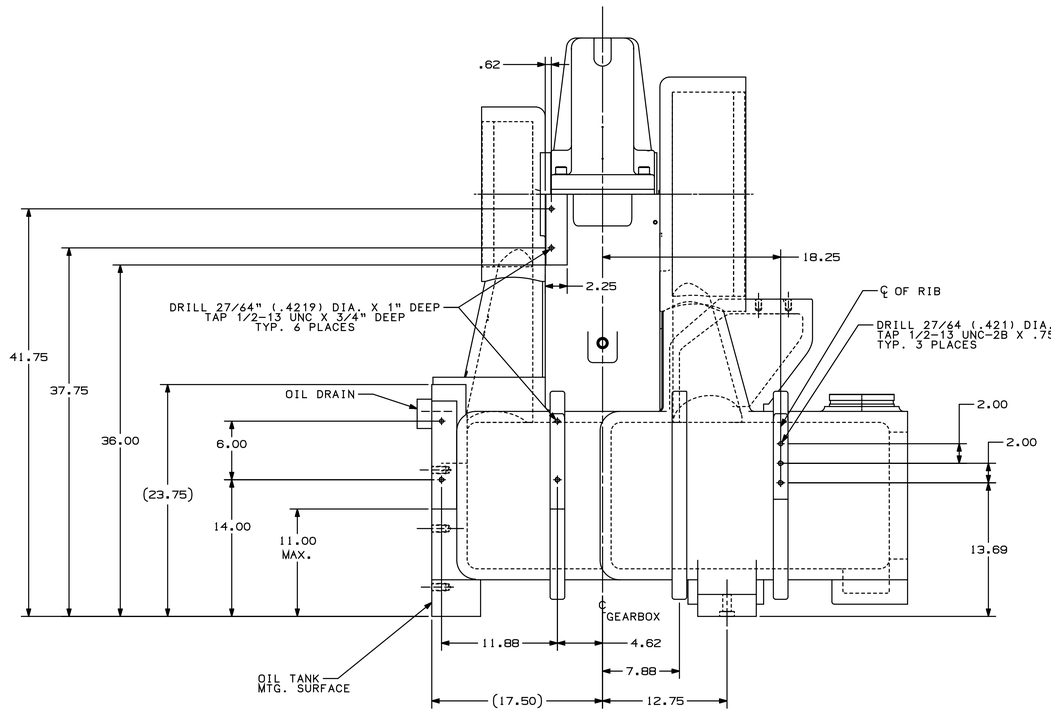

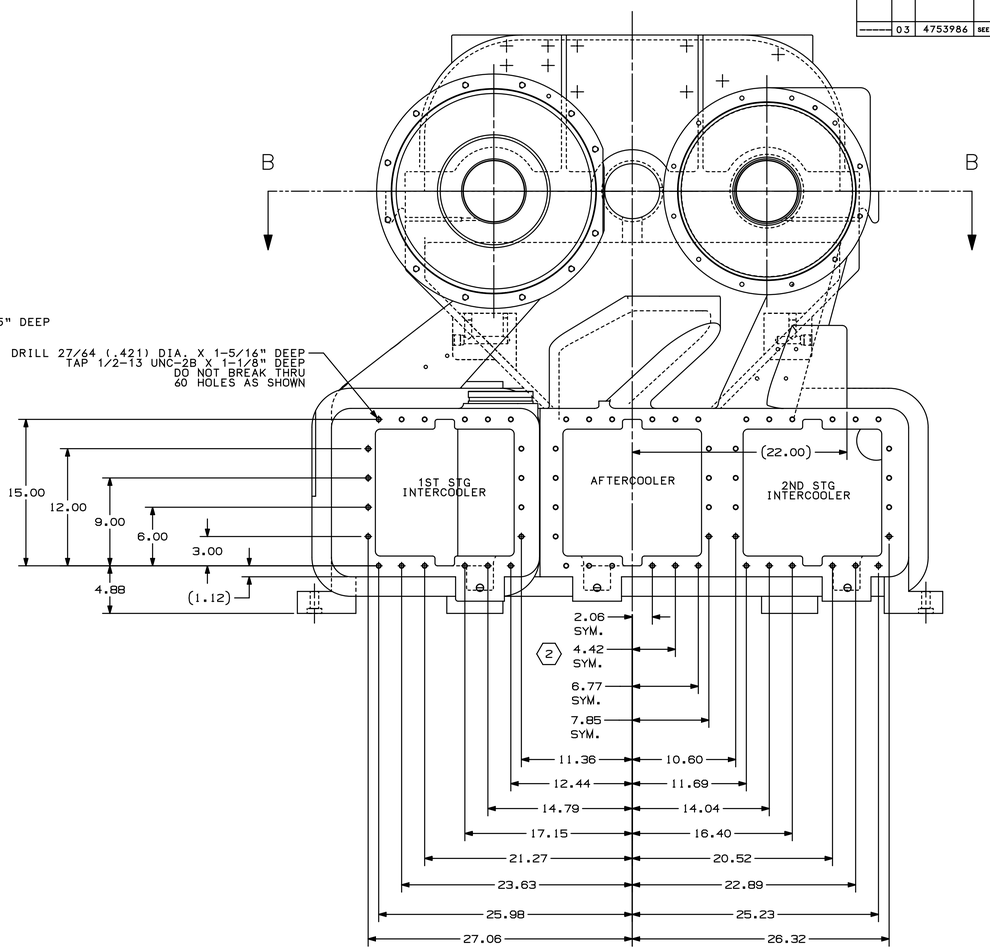

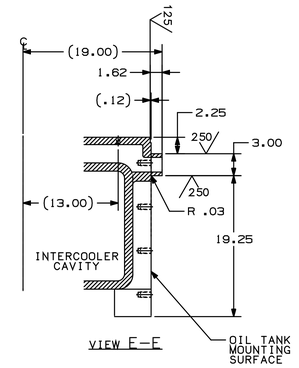

VIEW E-E

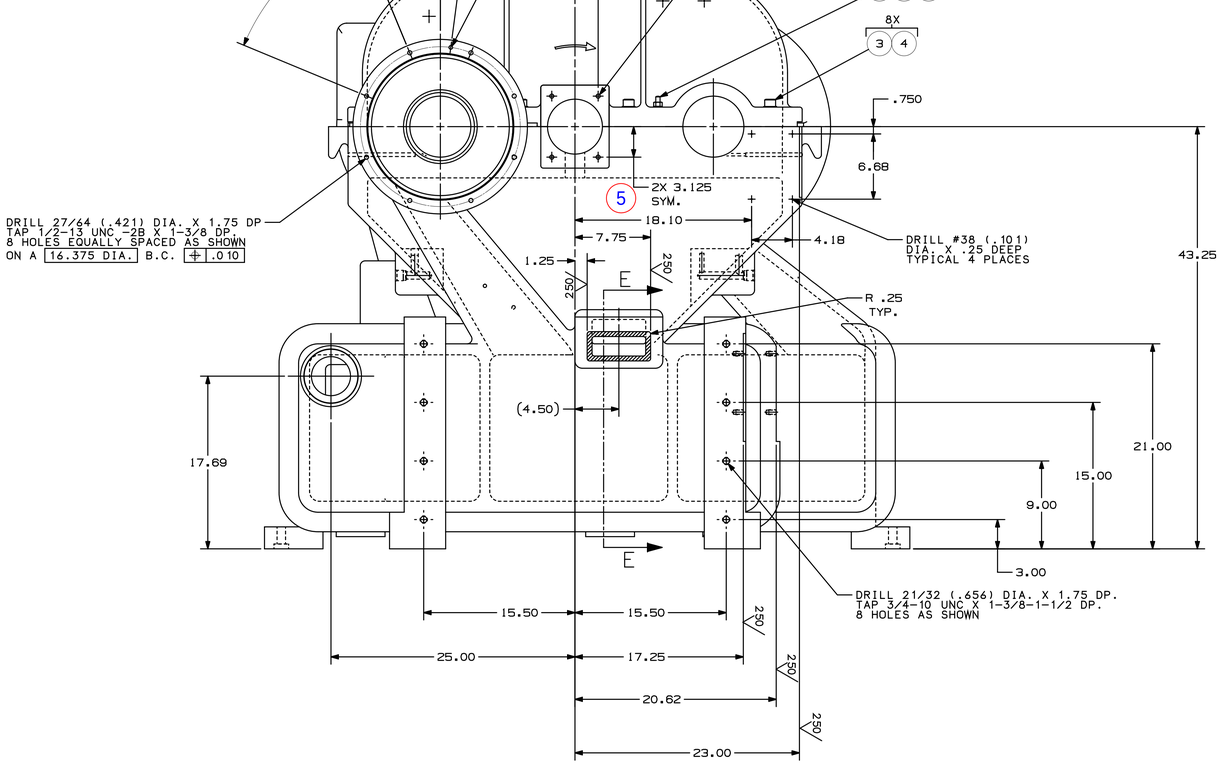

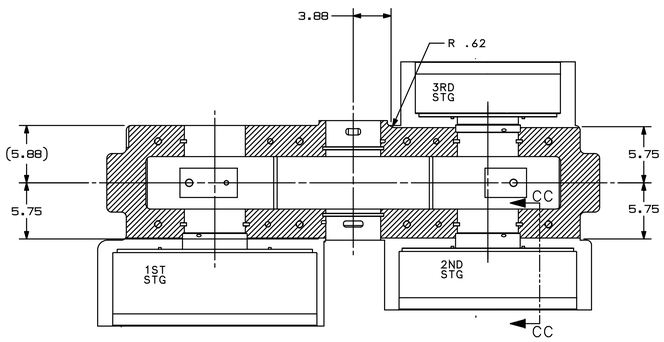

SPECIAL VIEW B-B

FOR SPLITLINE MACHINING OF BASE ONLY
(MACHINED SURFACE DENOTED BY CROSS HATCHING)

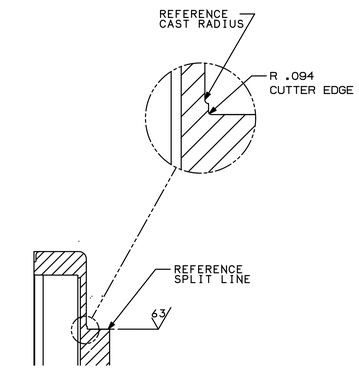

"VIEW CC-CC"

DRW NO. AAP379380 9-00360DG REV 2

"THIS DRAWING AND THE CONFIDENTIAL TRADE SECRET INFORMATION ON IT ARE THE PROPERTY OF CAMERON. POSSESSION DOES NOT GIVE ANY RIGHT TO DISCLOSE, REPRODUCE OR USE SAME FOR ANY PURPOSE OTHER THAN THAT GRANTED BY EXPRESS WRITTEN PERMISSION OF CAMERON. THIS DRAWING IS TO BE RETURNED TO CAMERON UPON ITS REQUEST OR COMPLETION OF AUTHORIZED USE."

1 PLACE DECIMAL X.X ±0.06
2 PLACE DECIMAL X.XX ±0.02
3 PLACE DECIMAL X.XXX ±0.010
FRACTIONAL CALLOUT X/X ±0.020
FILLETS: .03R-.08R
ANGLES: ±0° 30'
BREAK CORNERS: .02 X 45° MAX.
REMOVE ALL BURRS

THIRD ANGLE PROJECTION

DRAFTER: E. ZAGMESTER	DATE 2013/10/29	CAMERON — COMPRESSION SYSTEMS
CHECKER: E. ZAGMESTER	DATE 2013/10/29	GEARBOX_MACHINED_TA3000(60HZ)
ENGINEER: S. CASE	DATE 2013/10/29	(1ST STG. REDUCED SCROLL)
APPROVAL: T. MAZIERSKI	DATE 2013/10/29	
DRAWING PER ASME Y14.5-1994	DIMENSIONS IN INCHES UNLESS OTHERWISE SPECIFIED	E — NX DRAWING — DWG. NO. AAP379380 9-00360DG
SCALE 1:6	1101 BROADWAY, P.O. BOX 209 BUFFALO, NEW YORK 14225-0209, U.S.A.	SHEET 2 OF 4

REVISION HISTORY					
ZONE	REV	ECO NO	DESCRIPTION	DATE	APPROVED
———	01	4573269	REDRAWN IN NX & SYNC WITH SAP MATERIAL MASTER	2013/10/29	EJZ/SRC
———	02	4573345	THIS DRAWING SUPERSEDES AA3793809-03440/05 ADDED DETAIL "J" ADDED DETAIL "G" ADDED DIM. 11.37 & 10.25 TO VIEW B270 CENTERLINE CHANGE "G" TO "X" IN POSITION B270 & B90, NOTE 3 ALSO UPDATED	2013/11/04	EJZ/SRC
———	03	4753986	ALL DISCHARGE HOLES NOW 1/4" NPT, WAS 1/8" NPT	2015/10/02	EJZ/SRC

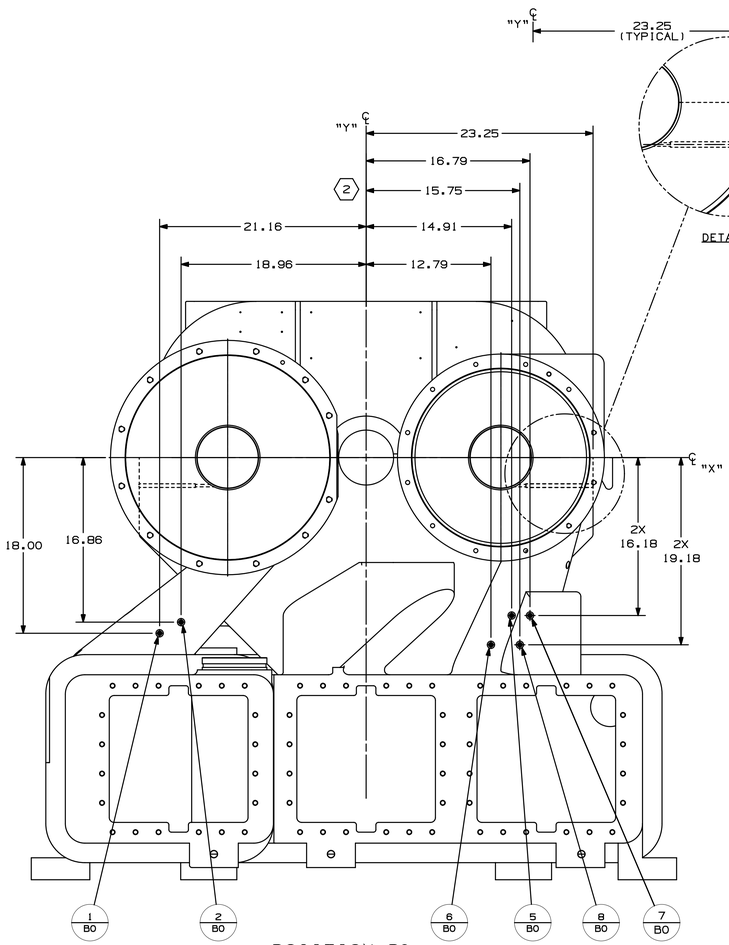

POSITION B0

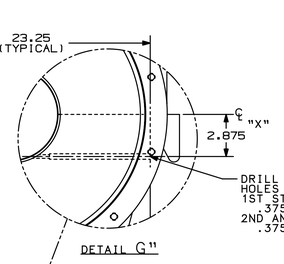

DETAIL "G"

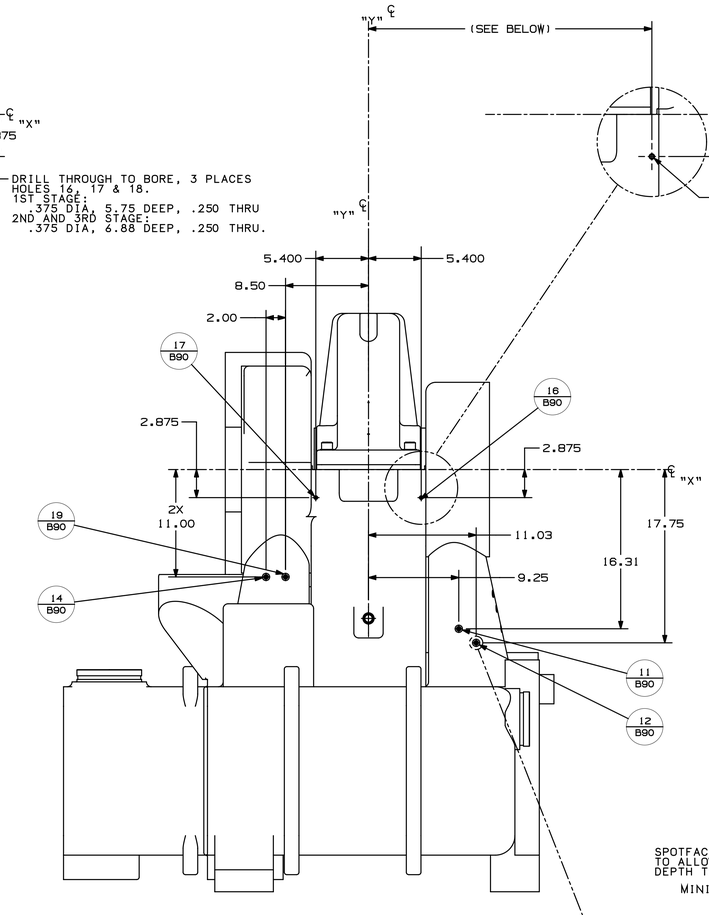

POSITON B90

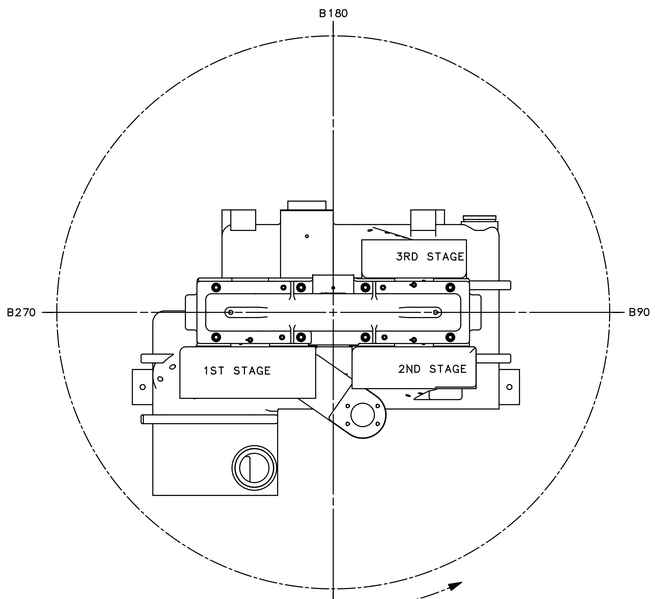

(WITH TOOLING STATIONARY AND GEARBOX AT ZERO DEGREES)

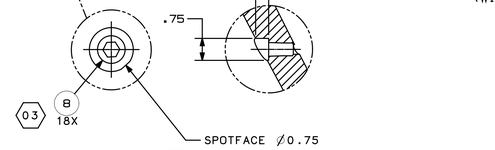

DETAIL "J"

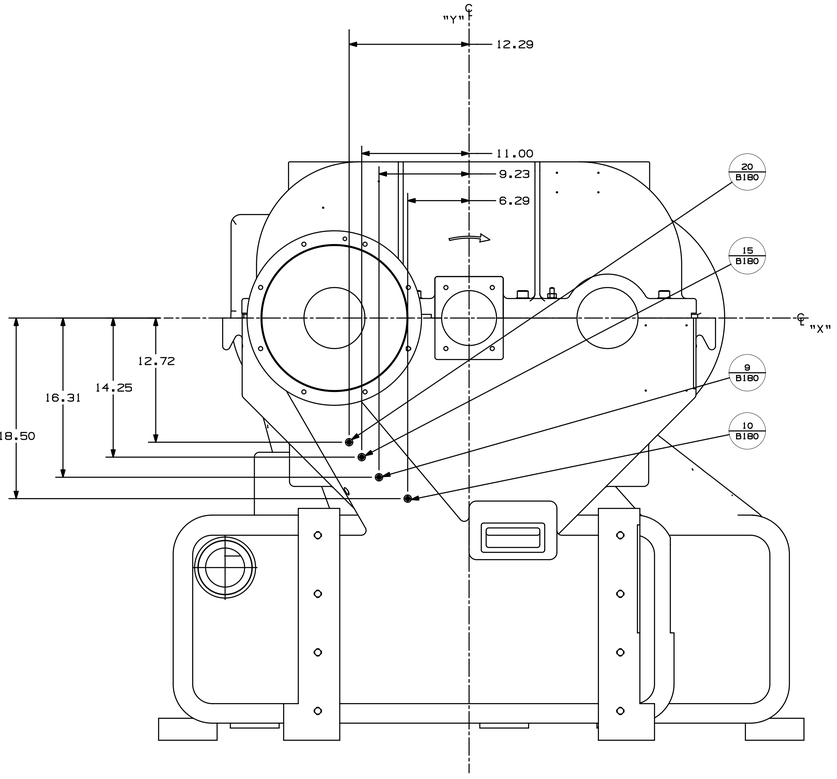

POSITION B180

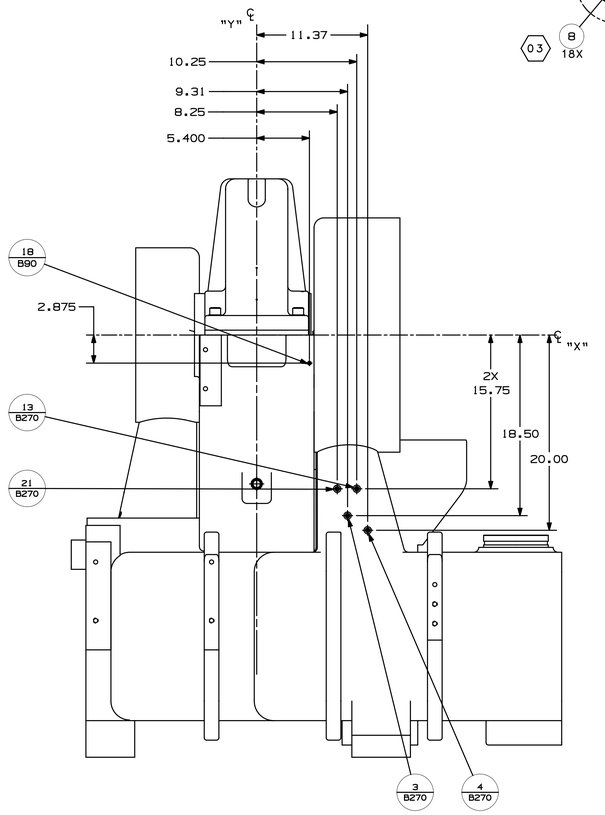

POSITION B270

NOTES:

1. DRILLING DEVICE IS ALWAYS ASSUMED STATIONARY IN THE ZERO DEGREE POSITION ("B0").
2. HOLES ARE DIMENSIONED BASED ON THE GEARBOX BEING POSITIONED AT THE ROTATION ANGLE "BXXX" GIVEN FOR EACH HOLES.

   EXAMPLE:

   4 B270 — HOLE NUMBER; ROTATION OF GEARBOX IN RELATION TO TOOLING
3. AFTER ROTATION TO "BXXX" ANGLE, INCREMENT "X" & "Y" DIMENSION TO DRILL/TAP HOLE.
4. CLEAN AND REMOVE ALL OIL,BURRS & CHIPS.

"THIS DRAWING AND THE CONFIDENTIAL TRADE SECRET INFORMATION ON IT ARE THE PROPERTY OF CAMERON. POSSESSION DOES NOT GIVE ANY RIGHT TO DISCLOSE, REPRODUCE OR USE SAME FOR ANY PURPOSE OTHER THAN THAT GRANTED BY EXPRESS WRITTEN PERMISSION OF CAMERON. THIS DRAWING IS TO BE RETURNED TO CAMERON UPON ITS REQUEST OR COMPLETION OF AUTHORIZED USE."

1 PLACE DECIMAL X.X ±0.06
2 PLACE DECIMAL X.XX ±0.02
3 PLACE DECIMAL X.XXX ±0.010
FRACTIONAL CALLOUT X.XX ±0.020
FINISH: 63 ⌀ OR BETTER
BREAK CORNERS: .02 X 45° MAX.
REMOVE ALL BURRS

THIRD ANGLE PROJECTION

DRAFTER: E. ZAGMESTER	DATE 2013/10/29	CAMERON — COMPRESSION SYSTEMS
CHECKER: E. ZAGMESTER	DATE 2013/10/29	GEARBOX_MACHINED_TA3000(60HZ)
ENGINEER: S. CASE	DATE 2013/10/29	(1ST STG. REDUCED SCROLL)
APPROVAL: T. WAZIERSKI	DATE 2013/10/29	E — NX DRAWING — DWG. NO. AAP379380 9-00360DG
DRAWING PER ASME Y14.5-1994		SCALE 1:6 — SHEET 3 OF 4
DIMENSIONS IN INCHES UNLESS OTHERWISE SPECIFIED		1101 BROADWAY, P.O. BOX 207, BUFFALO, NEW YORK 14225-0207, U.S.A.

DWG NO AAP379380 9-00360DG REV 3

REVISION HISTORY					
ZONE	REV.	ECO NO.	DESCRIPTION	DATE	APPROVED
------	01	4573269	REDRAWN IN NX & SYNC WITH SAP	2013/10/29	EJZ/SRC
------	02	4573345	THIS DRAWING SUPERSEDES AAP379380?-G3460/05 SHEET 4 OF 4 ONLY. SHEET UPDATED TO MATCH INSPECTION DRAWING	2013/11/04	EJZ/SRC
------	03	4753986	SEE SH 1 FOR CHANGES	2015/10/02	EJZ/SRC

DETAIL "F"
TYP. 2 PLACES

DRILL 7/16" DIA. X 2-3/4" DEEP
TAP 1/4" NPT TO FIT STD. PLUG GAGE

DRILL 23/32" DIA. X 2-3/4" DEEP
TAP 1/2" NPT TO FIT STD. PLUG GAGE
TYPICAL 2 PLACES

DRILL 21/32 DIA. X 2.12 DEEP
TAP 3/4-10UNC-2B X 1.75 DEEP
8 HOLES LOCATED AS SHOWN ON
PLAN VIEW, SHEET 1 OF 4

TYP. 7 PLACES
BETWEEN H.S. & L.S
PINIONS AS SHOWN

℄ L.S. PINION
℄ BULLGEAR
℄ H.S. PINION

1ST STG.
2ND STG.
3RD STG.

SEE DETAIL K
TYP. ALL STAGES

SEE DETAIL "U"
TYP. 7 PLACES

THRU BORE TO BE MACHINED
TO THIS THEORETICAL POINT
TO GUARANTEE CLEARANCE

DETAIL "U"
TYPICAL 7 PLACES

DETAIL "K"
TYP. 2 PLACES EACH STAGE

"THIS DRAWING AND THE CONFIDENTIAL TRADE SECRET INFORMATION ON IT ARE THE PROPERTY OF CAMERON. POSSESSION DOES NOT GIVE ANY RIGHT TO DISCLOSE, REPRODUCE OR USE SAME FOR ANY PURPOSE OTHER THAN THAT GRANTED BY EXPRESS WRITTEN PERMISSION OF CAMERON. THIS DRAWING IS TO BE RETURNED TO CAMERON UPON ITS REQUEST OR COMPLETION OF AUTHORIZED USE."

1 PLACE DECIMAL X.X ±0.06
2 PLACE DECIMAL X.XX ±0.02
3 PLACE DECIMAL X.XXX ±0.010
FRACTIONAL CALLOUT X/X ±0.020
FILLETS: 0.38~0.88
ANGLES: ±0° 30'
BREAK CORNERS: .02 X 45° MAX.
REMOVE ALL BURRS

THIRD ANGLE PROJECTION

DRAFTER: E. ZAGMESTER	DATE	2013/10/29
CHECKER: E. ZAGMESTER	DATE	2013/10/29
ENGINEER: S. CASE	DATE	2013/10/29
APPROVAL: T. MAZIERSKI	DATE	2013/10/29

DRAWING PER ASME Y14.5-1994
DIMENSIONS IN INCHES UNLESS OTHERWISE SPECIFIED

CAMERON — COMPRESSION SYSTEMS

GEARBOX_MACHINED_TA3000(60HZ)

(1ST STG, REDUCED SCROLL)

E — NX DRAWING — DWG. NO. AAP3793809-00360DG

SCALE 3:8 — 1521 BROADWAY, P.O. BOX 207, BUFFALO, NEW YORK 14225-0207, U.S.A. — SHEET 4 OF 4

AAP3793809-00360DG SH 4

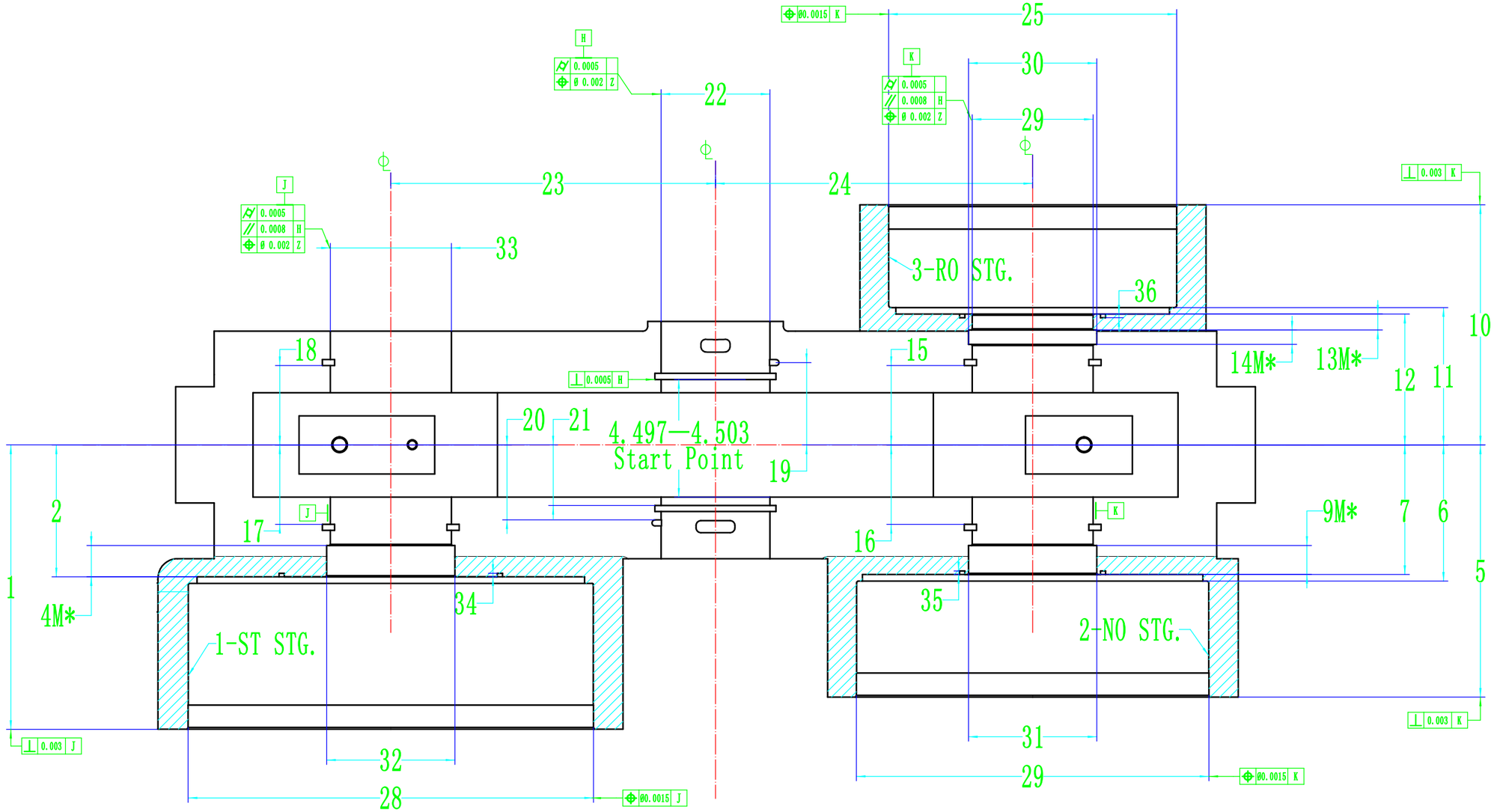

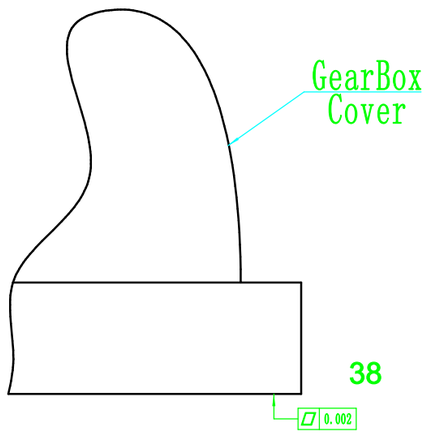

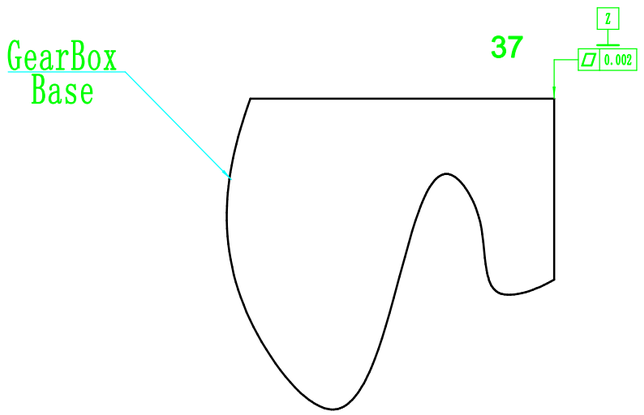

制图			TA3000系列蜗壳关键尺寸图	1:3
校核				
CAMERON			检验-5	