CONNECTION DATA		
POINT	DESCRIPTION	CONN. SIZE
A	Baseplate Drain	1" FNPT
B	Volute Casing Drain	1/2" FNPT
C	B.U. Oil Breather/Fill	1/2" FNPT
D	B.U. Oil Drain	1/2" FNPT
E	Trico Oiler	1/4" FNPT
F	Discharge Pressure 1	1/4" FNPT
TP6	Discharge Pressure 2	1/4" FNPT

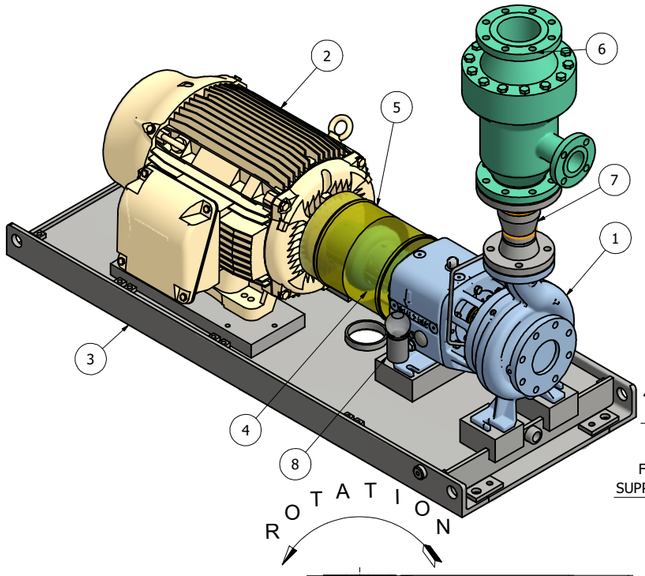

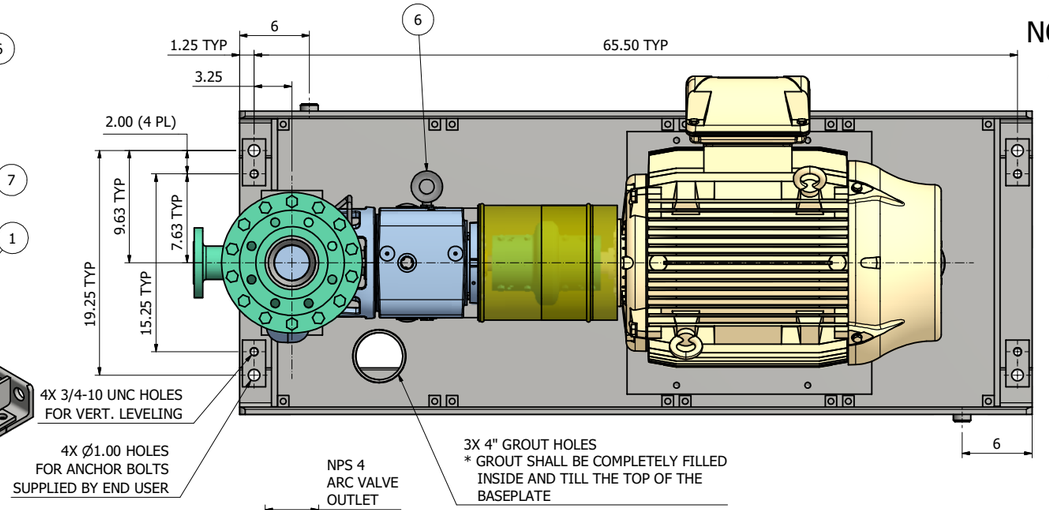

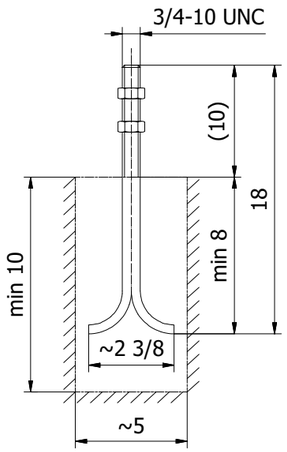

ANCHOR BOLT DETAIL
BOLT MATERIAL = GALVANIZED STEEL
QUANTITY = 4
SUPPLIED BY SULZER

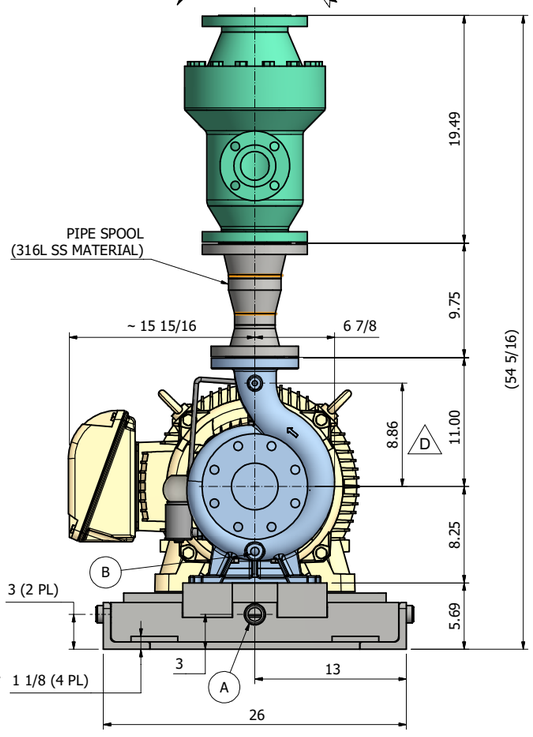

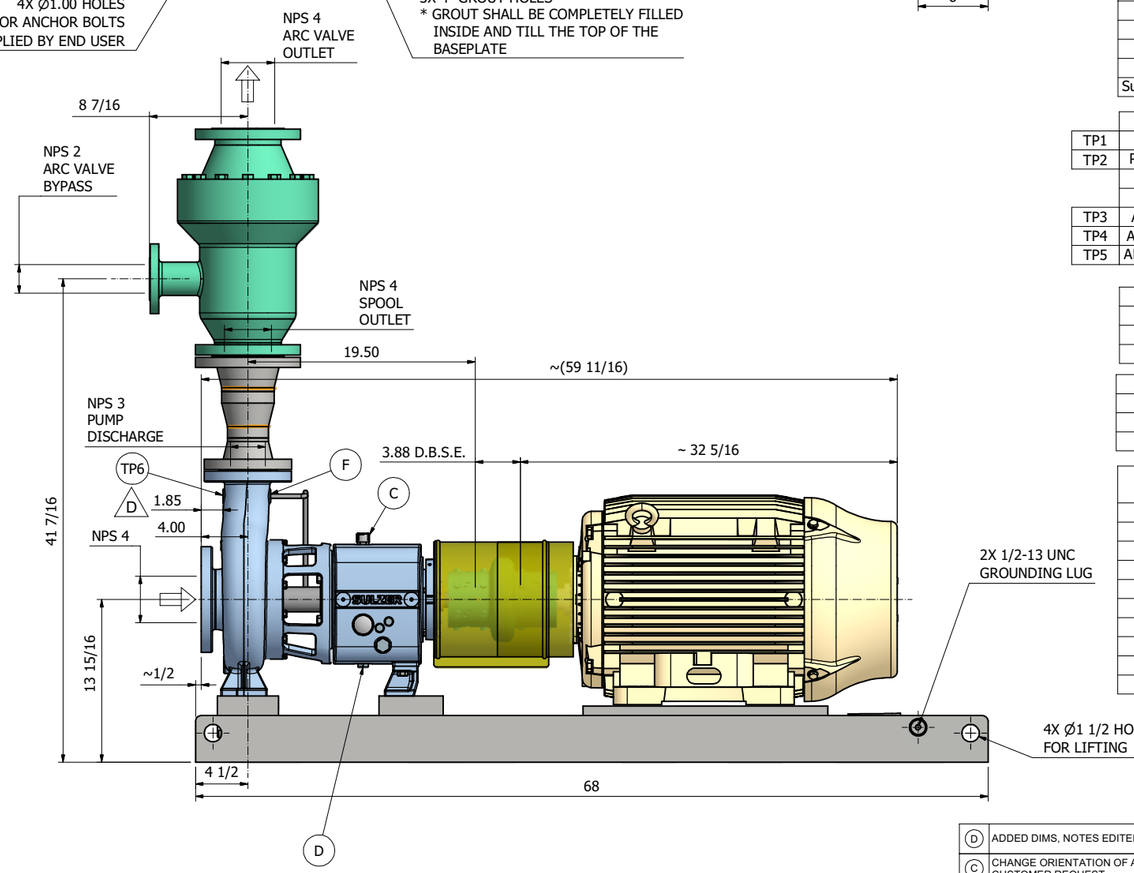

BOM		
ITEM	DESCRIPTION	FURNISHED BY
1	Pump - CPE 21-3	Sulzer
2	Motor - SIEMENS 365TS	Sulzer
3	Baseplate - PIP Style	Sulzer
4	Coupling - Thomas XTSR71	Sulzer
5	Guard - Aluminum	Sulzer
6	ARC Valve	Sulzer
7	Spool Adapter	Sulzer
8	Trico Oiler	Sulzer

PUMP SPECIFICATIONS	
Size and Type	4 x 3 x 8 - CPE 21-3
Pump Specification	ASME B73.1
Rotation	CW (as viewed from Driver)
Speed	3550 rpm
DE Bearing Specs	SKF - Thrust - 7309 BECBM (qty 2)
NDE Bearing Specs	SKF - Radial - NUP 311 ECJ (qty 1)

Process/Performance Specifications	
Flow	705 GPM Rated / 557 GPM Normal
Head	248.5 ft
Specific Gravity	0.997
Specific Speed	1811
Suction Specific Speed	10530

FLANGE SPECIFICATIONS		
TP1	Pump Suction	4" - ASME B16.5 CL 150 Flat Face
TP2	Pump Discharge	3" - ASME B16.5 CL 150 Flat Face
	Spool Inlet	3" - ASME B16.5 CL 150 Raised Face
	Spool Outlet	4" - ASME B16.5 CL 150 Raised Face
TP3	ARC Valve Inlet	4" - ASME B16.5 CL150 Raised Face
TP4	ARC Valve Outlet	4" - ASME B16.5 CL150 Raised Face
TP5	ARC Valve Bypass	2" - ASME B16.5 CL150 Raised Face

SEAL SPECIFICATIONS	
Manufacturer	AES
Seal Type	CSSN+
Flush Plan	Plan 11 w/ 3/8" SS Tubing

COUPLING SPECIFICATIONS	
Manufacturer	Rexnard/Thomas
Type	XTSR71 - 726 - 3.875" Spacer
Guards	Painted Aluminum - Barrel Type

MOTOR SPECIFICATIONS	
Manufacturer	Siemens
Frame Size	365TS
Type	Severe Duty
Power	75 HP
Speed	3600 RPM
Voltage	460 V
Frequency	60 Hz
Phase	3 PH
Service Factor	1.15
Enclosure	TEFC

NOTES:
1. ALL DIMENSIONS IN INCHES.
2. PIPE SPOOL AND CONTROL VALVE WILL SHIP UNATTACHED TO PUMP.
3. ALL FLANGES PER ASME B16.5 SMOOTH FINISH 125-250 MIN AARH.
4. GROUT SHALL BE COMPLETELY FILLED INSIDE BASE AND UP TO TOP OF BASE.
5. CABLE ENTRY FROM THE BOTTOM OF TERMINAL BOX.
6. PAINTING SHALL BE SUITABLE FOR COASTAL / MARINE ENVIRONMENTS FOR THE INSTALLATION OF PUMPS. D

NOTES:

1. COLORS ARE NOT INTENDED TO REPRESENT "AS SHIPPED" PAINT REQUIREMENTS. THEY ARE FOR QUICK IDENTIFICATION OF PIPING AND EQUIPMENT.
2. PIPING AND EQUIPMENT ARE MODELED REPRESENTATIONS ONLY, ACTUAL LOCATION AND ORIENTATION MAY VARY PER SHOP STANDARDS, UNLESS OTHERWISE DIMENSIONED.

COPYRIGHT © (DATE OF DRAWING) SULZER PUMPS SOLUTIONS (US). ALL RIGHTS RESERVED. NO PART OF THIS DRAWING MAY BE REPRODUCED, DISTRIBUTED OR TRANSMITTED IN ANY FORM OR ANY MEANS, ELECTRONIC OR MECHANICAL, INCLUDING PHOTOCOPYING AND RECORDING, WITHOUT THE EXPRESS **PRIOR** WRITTEN CONSENT OF SULZER PUMPS SOLUTIONS (US).

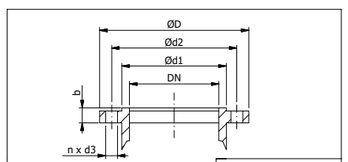

PUMP FLANGE DIMENSIONS					FLANGE DRILLING ASME B16.5 CLASS 150 FF		
	NPS	D	d1	b	d2	d3	n
SUCT	4.00	9.00	--	0.96	7.50	0.75	8
DISCH	3.00	7.50	--	0.96	6.00	0.75	4

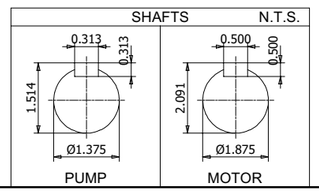

- CERTIFIED FINAL
- CERTIFIED FOR NOZZLE & FOUNDATION ONLY
- PRELIMINARY ONLY

MAXIMUM NOZZLE LOADINGS

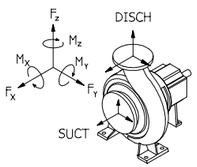

		SUCT	DISCH
FORCES (lb)	Fx	2700	1400
	Fy	1350	1350
	Fz	1500	3250
	Fr	3375	3790
MOMENTS (lb-ft)	Mx	1300	1200
	My	350	1460
	Mz	350	690
	Mr	1395	2015

APPROXIMATE WEIGHTS		
PUMP:	260	lb
MOTOR:	770	lb
BASEPLATE:	688	lb
AUXILIARY:	350	lb
TOTAL:	2068	lb

REV	MODIFICATION	NAME	DATE
D	ADDED DIMS, NOTES EDITED PER CUST REQUEST	hughmar	220908
C	CHANGE ORIENTATION OF ARC VALVE AND NORTH ARROW PER CUSTOMER REQUEST	hughmar	220720
B	ADDED NOTES AND ANCHOR BOLT DETAIL PER CUST REQUEST	hughmar	220629
A	ADDED ORDER INFO & PUMP INFO TABLES, ARC VALVE, UPDATED WEIGHTS, ADDED NOTES	hughmar	220316

SEP. PART LIST: No | DESIGN GROUP: SPSUS | CAD -DRAWING
REPLACED BY | SUBSTITUTE FOR | ORIGINAL SCALE

CPE21-3

776374 10 20

DIMENSIONAL DRAWING

PIP#268 365TS
General Arrangement

DRAWN: 220113 hughmar
CHECKED: 220118 DAVE LANGENHAN
APPROVED: 220118 DAVE LANGENHAN

SULZER | PART - No. 001 | EN | 304303094 | 1 / 1

CONNECTION DATA		
POINT	DESCRIPTION	CONN. SIZE
A	Baseplate Drain	1" FNPT
B	Volute Casing Drain	1/2" FNPT
C	B.U. Oil Breather/Fill	1/2" FNPT
D	B.U. Oil Drain	1/2" FNPT
E	Trico Oiler	1/4" FNPT
F	Discharge Pressure 1	1/4" FNPT
TP6	Discharge Pressure 2	1/4" FNPT

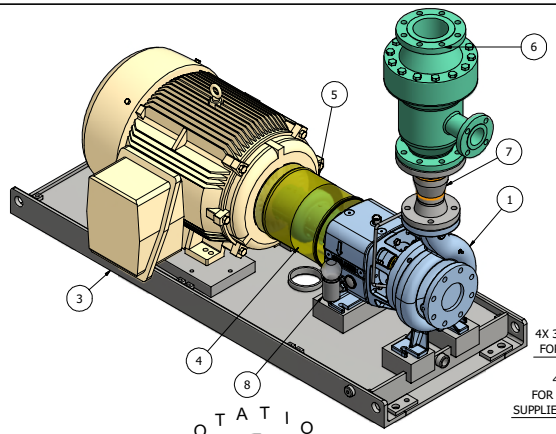

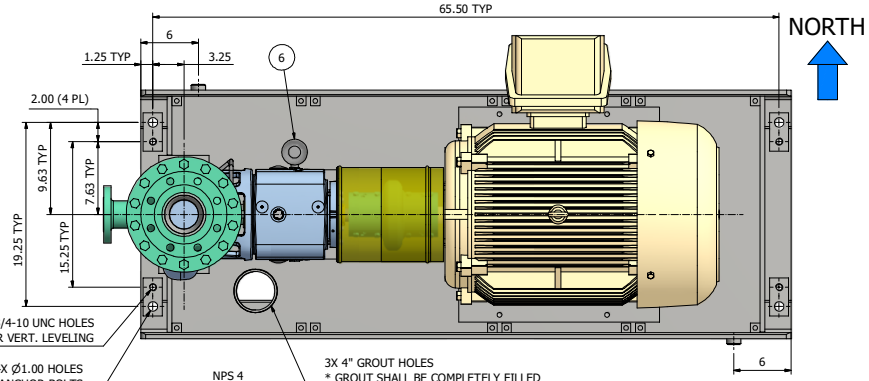

BOM		
ITEM	DESCRIPTION	FURNISHED BY
1	Pump - CPE 21-3	Sulzer
2	Motor - SIEMENS 365TS	Sulzer
3	Baseplate - PIP Style	Sulzer
4	Coupling - Thomas XTSR71	Sulzer
5	Guard - Aluminum	Sulzer
6	ARC Valve	Sulzer
7	Spool Adapter	Sulzer
8	Trico Oiler	Sulzer

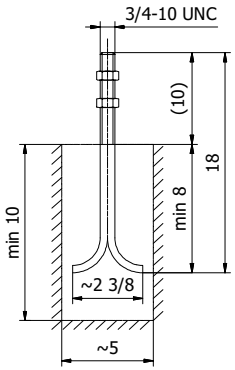

ANCHOR BOLT DETAIL
BOLT MATERIAL = GALVANIZED STEEL
QUANTITY = 4
SUPPLIED BY SULZER

PUMP SPECIFICATIONS	
Size and Type	4 x 3 x 8 - CPE 21-3
Pump Specification	ASME B73.1
Rotation	CW (as viewed from Driver)
Speed	3550 rpm
DE Bearing Specs	SKF - Thrust - 7309 BECBM (qty 2)
NDE Bearing Specs	SKF - Radial - NUP 311 ECJ (qty 1)

Process/Performance Specifications	
Flow	705 GPM Rated / 557 GPM Normal
Head	248.5 ft
Specific Gravity	0.997
Specific Speed	1811
Suction Specific Speed	10530

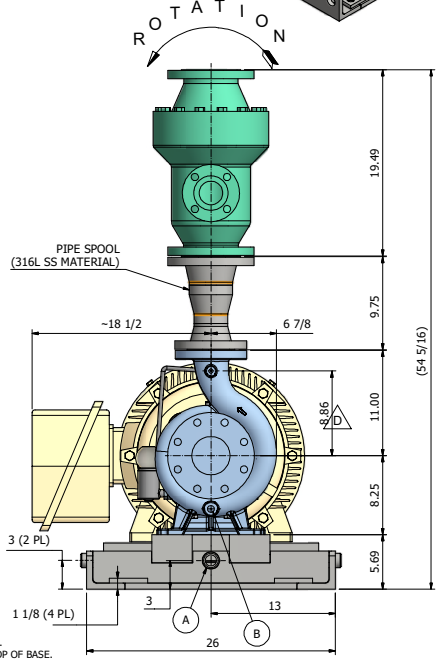

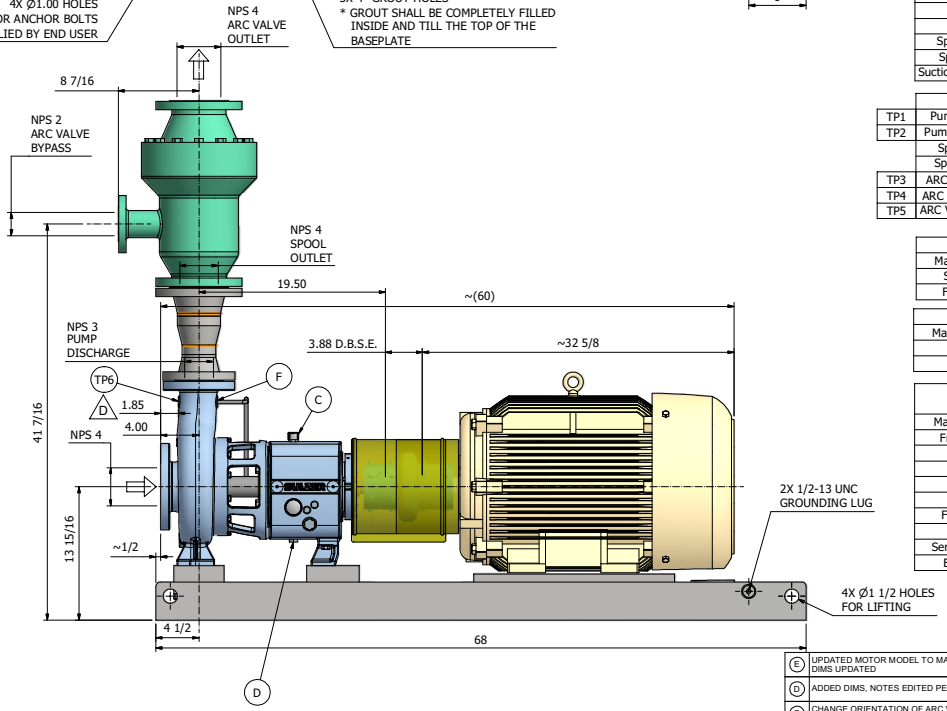

FLANGE SPECIFICATIONS		
TP1	Pump Suction	4" - ASME B16.5 CL 150 Flat Face
TP2	Pump Discharge	3" - ASME B16.5 CL 150 Flat Face
	Spool Inlet	3" - ASME B16.5 CL 150 Raised Face
	Spool Outlet	4" - ASME B16.5 CL 150 Raised Face
TP3	ARC Valve Inlet	4" - ASME B16.5 CL150 Raised Face
TP4	ARC Valve Outlet	4" - ASME B16.5 CL150 Raised Face
TP5	ARC Valve Bypass	2" - ASME B16.5 CL150 Raised Face

SEAL SPECIFICATIONS	
Manufacturer	AES
Seal Type	CSSN+
Flush Plan	Plan 11 w/ 3/8" SS Tubing

COUPLING SPECIFICATIONS	
Manufacturer	Rexnard/Thomas
Type	XTSR71 - 726 - 3.875" Spacer
Guards	Painted Aluminum - Barrel Type

MOTOR SPECIFICATIONS	
Manufacturer	Siemens
Frame Size	365TS
Type	Severe Duty
Power	75 HP
Speed	3600 RPM
Voltage	460 V
Frequency	60 Hz
Phase	3 PH
Service Factor	1.15
Enclosure	TEFC

NOTES:
1. ALL DIMENSIONS IN INCHES.
2. PIPE SPOOL AND CONTROL VALVE WILL SHIP UNATTACHED TO PUMP.
3. ALL FLANGES PER ASME B16.5 SMOOTH FINISH 125-250 MIN AARH.
4. GROUT SHALL BE COMPLETELY FILLED INSIDE BASE AND UP TO TOP OF BASE.
5. CABLE ENTRY FROM THE BOTTOM OF TERMINAL BOX.
6. PAINTING SHALL BE SUITABLE FOR COASTAL / MARINE ENVIRONMENTS FOR THE INSTALLATION OF PUMPS.

NOTES:
1. COLORS ARE NOT INTENDED TO REPRESENT "AS SHIPPED" PAINT REQUIREMENTS. THEY ARE FOR QUICK IDENTIFICATION OF PIPING AND EQUIPMENT.
2. PIPING AND EQUIPMENT ARE MODELED REPRESENTATIONS ONLY. ACTUAL LOCATION AND ORIENTATION MAY VARY PER SHOP STANDARDS, UNLESS OTHERWISE DIMENSIONED.

COPYRIGHT © (DATE OF DRAWING) SULZER PUMPS SOLUTIONS (US). ALL RIGHTS RESERVED. NO PART OF THIS DRAWING MAY BE REPRODUCED, DISTRIBUTED OR TRANSMITTED IN ANY FORM OR ANY MEANS, ELECTRONIC OR MECHANICAL, INCLUDING PHOTOCOPYING AND RECORDING, WITHOUT THE EXPRESS **PRIOR** WRITTEN CONSENT OF SULZER PUMPS SOLUTIONS (US).

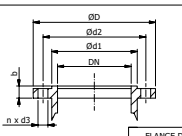

PUMP FLANGE DIMENSIONS					FLANGE DRILLING ASME B16.5 CLASS 150 FF			
	NPS	D	d1	b	d2	d3	n	
SUCT	4.00	9.00	--	0.96	7.50	0.75	8	
DISCH	3.00	7.50	--	0.96	6.00	0.75	4	

SHAFTS N.T.S.

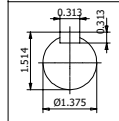

CERTIFIED FINAL
CERTIFIED FOR NOZZLE & FOUNDATION ONLY
PRELIMINARY ONLY

MAXIMUM NOZZLE LOADINGS

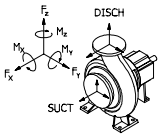

		SUCT	DISCH
FORCES (lb)	Fx	2700	1400
	Fy	1350	1350
	Fz	1500	3250
MOMENTS (lb-ft)	Fr	3375	3790
	Mx	1300	1200
	My	350	1460
	Mz	350	690
	Mr	1395	2015

APPROXIMATE WEIGHTS		
PUMP:	260	lb
MOTOR:	813	lb
BASEPLATE:	688	lb
AUXILIARY:	350	lb
TOTAL:	2111	lb

REV	MODIFICATION	NAME	DATE
E	UPDATED MOTOR MODEL TO MATCH WHAT WAS PROVIDED, MOTOR DIMS UPDATED	parsdus	221017
D	ADDED DIMS, NOTES EDITED PER CUST REQUEST	hughmar	220908
C	CHANGE ORIENTATION OF ARC VALVE AND NORTH ARROW PER CUSTOMER REQUEST	hughmar	220720
B	ADDED NOTES AND ANCHOR BOLT DETAIL PER CUST REQUEST	hughmar	220629
A	ADDED ORDER INFO & PUMP INFO TABLES, ARC VALVE, UPDATED WEIGHTS, ADDED NOTES	hughmar	220316

SEP. PART LIST No | DESIGN GROUP SPSUS | CAD -DRAWING
REPLACED BY | SUBSTITUTE FOR | ORIGINAL SCALE

CPE21-3

776374 10 20

DIMENSIONAL DRAWING
PIP#268 365TS
General Arrangement

DRAWN: 220113 hughmar
CHECKED: 220118 DAVE LANGENHAN
APPROVED: 220118 DAVE LANGENHAN

SULZER | PART - No. 001 | EN | 304303094 | 1 / 1