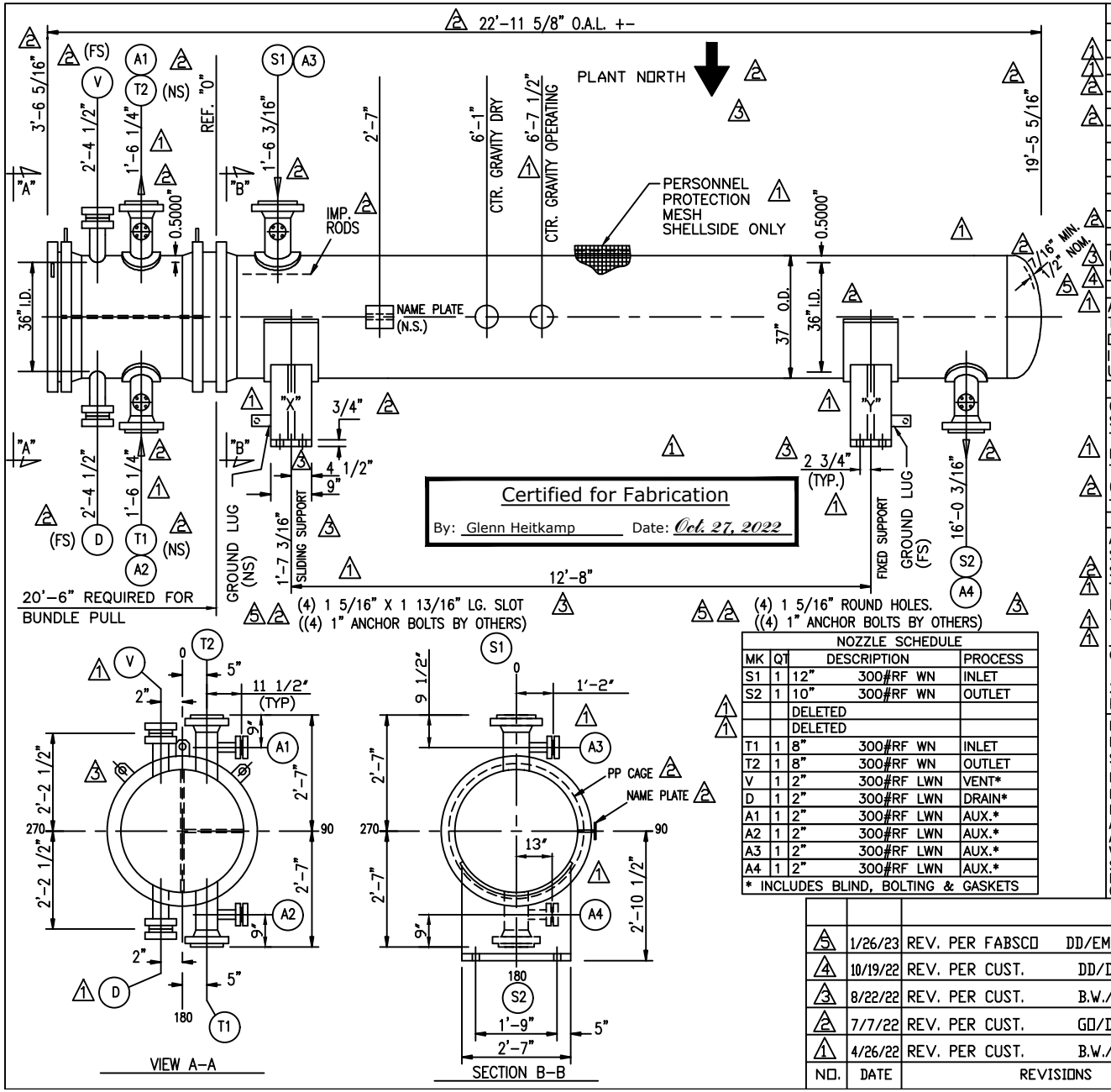

NOZZLE SCHEDULE			
MK	QT	DESCRIPTION	PROCESS
S1	1	12" 300#RF WN	INLET
S2	1	10" 300#RF WN	OUTLET
		DELETED	
		DELETED	
T1	1	8" 300#RF WN	INLET
T2	1	8" 300#RF WN	OUTLET
V	1	2" 300#RF LWN	VENT*
D	1	2" 300#RF LWN	DRAIN*
A1	1	2" 300#RF LWN	AUX.*
A2	1	2" 300#RF LWN	AUX.*
A3	1	2" 300#RF LWN	AUX.*
A4	1	2" 300#RF LWN	AUX.*

* INCLUDES BLIND, BOLTING & GASKETS

DESIGN DATA	SHELL	TUBE
DESIGN PRESSURE P.S.I.G.	125	120
M.A.W.P. P.S.I.G.	128	128
MAP P.S.I.G.	146	134
LIMITED BY	TUBESHEET	CHANNEL COVER
VACUUM PRESSURE P.S.I.G.	15 @ 300° F.	N/A
TEST PRESSURE P.S.I.G.	SHOP-188/FIELD-167	SHOP-172 /FIELD-167
DESIGN TEMP. Deg.F.	300	150
MDMT Deg. F.	32	32
CORROSION ALLOWANCE	1/8"	1/8"
NUMBER OF PASSES	1	4
RADIOGRAPHY	FULL	FULL
HEAT TREAT REQUIRED	NO	U-BENDS ONLY

ESTIMATED WEIGHTS, LBS.

DRY: 20200 BUNDLE: 10500 WET/HYDRO:29000 SHELL: 5500 CHAN CVR: 1420 CHAN: 2680
OPERATING : 27725

SPECIFICATIONS

ASME Code Section VIII, Division 1, 2021 Ed. (Stamp: Yes)
TEMA Class R 10th Ed; & National Board Reg. Req. API-660 9th Ed.
Design Reviewed For Compliance With The Requirements of UG-120(d).
Impact Test Exempt per UCS-66(a),(c),(g), Fig. UCS-66 Gen. Note (c) & UCS-67. UOP SPECS

MATERIAL

CHANNEL: SA-516-70
SHELL: SA-516-70
TUBESHEETS: SA-516-70N
BAFFLES: SA-36
TUBES: SA-179 (SEAMLESS)
SEE BOM FOR REMAINDER OF MATERIALS
(406) U'S 3/4" O.D.X 0.083" (MIN.) X 17'-0" LG.
TUBE PITCH 1" 90° SURFACE 2668.9 SQ.FT.

GENERAL NOTES

ALL BOLT HOLES TO STRADDLE NATURAL CENTER LINES.
STRESS RELIEVE U-BENDS PLUS 1'-0" OF STRAIGHT LENGTH
SHELLSIDE PERSONEL PROTECTION CAGE
TUBES TO TUBESHEET EXPANDED & SEAL WELDED
HARDENED WASHERS REQUIRED
10% SPARE BOLTING FOR BODY FLG'S.
FLAMMABLE SERVICE SHELL SIDE.
GASKETS: .175" THK. 316 S.S. SPIRAL WOUND W/ GRAPHITE FILLER AND 1/8" THK. INNER AND OUTER COMP. RINGS
2 SETS OF SPARE GASKETS REQUIRED.
PAINT: SEE DWG. -1A.

PROJECT NAME: WORLD ENERGY RENEWABLES PROJECT
EQUIPMENT OWNER: AIR PRODUCTS MANUFACTURING LLC
SERVICE: PRODUCT FRACTIONATOR OVERHEAD TRIM CONDENSER
LOCATION: WORLD ENERGY, PARAMOUNT, CA. USA
PRODUCT: FRACTIONATOR OVERHEAD VAPOR
ITEM NO.: 18-X-359
AIR PRODUCTS P.O. NO.: 4505600056 / A8KM-4-402-PO-1
AP PROJECT NO: EN-20-7119
VDR CODE NO.: HC09
SERIAL NO.: S21-13258-4
ENGINEER: GH
CUSTOMER / CLIENT: WORLD ENERGY PARAMOUNT

NO.	DATE	REVISIONS
5	1/26/23	REV. PER FABSCO DD/EMG
4	10/19/22	REV. PER CUST. DD/DG
3	8/22/22	REV. PER CUST. B.W./DD
2	7/7/22	REV. PER CUST. GO/DD
1	4/26/22	REV. PER CUST. B.W./DD

ASSEMBLY AND SPECIFICATIONS FOR
ONE 36-204 A E U

DWN. BY GH
DATE 1-25-2022
CKD. BY DiCarlo

Fabsco
SHELL & TUBE, LLC

DWG.NO. S21-13258-4-1
REV. 5

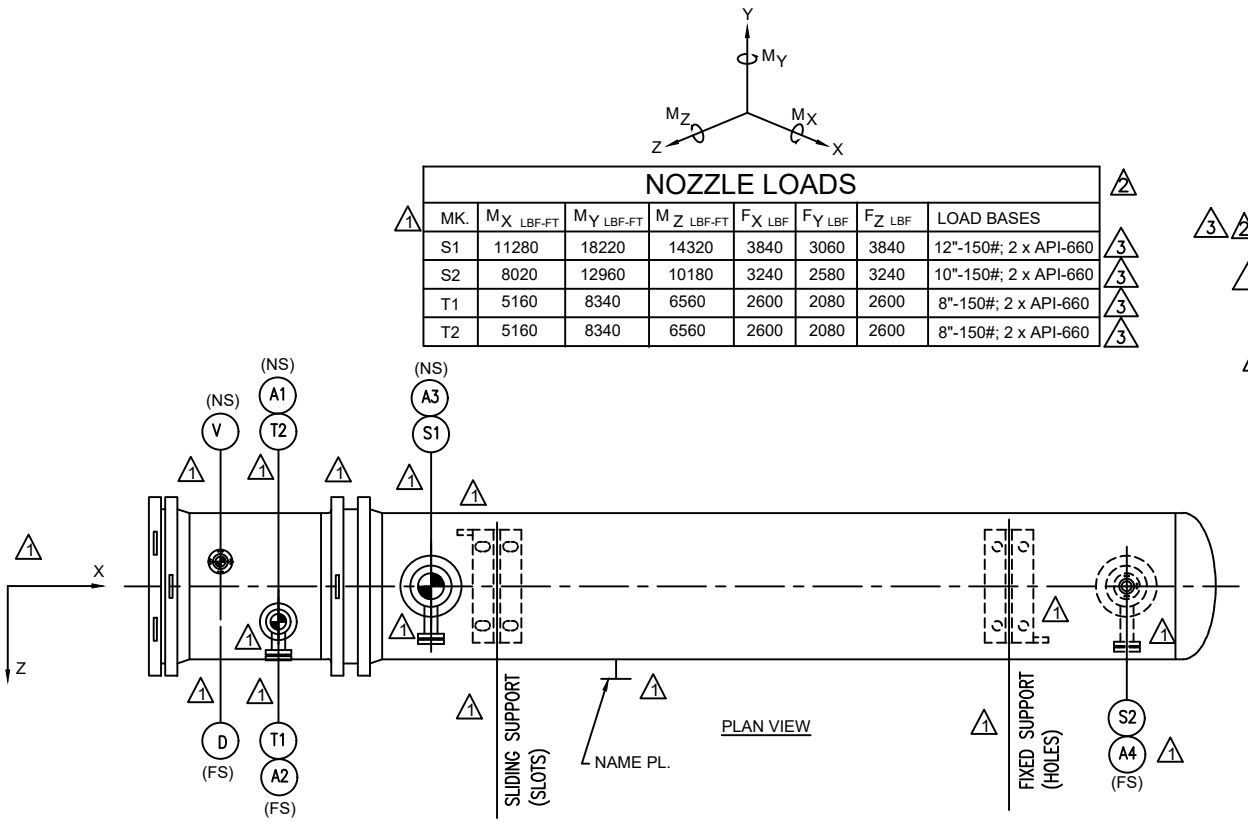

NOZZLE LOADS

MK.	$M_{X\ LBF-FT}$	$M_{Y\ LBF-FT}$	$M_{Z\ LBF-FT}$	$F_{X\ LBF}$	$F_{Y\ LBF}$	$F_{Z\ LBF}$	LOAD BASES
S1	11280	18220	14320	3840	3060	3840	12"-150#; 2 x API-660
S2	8020	12960	10180	3240	2580	3240	10"-150#; 2 x API-660
T1	5160	8340	6560	2600	2080	2600	8"-150#; 2 x API-660
T2	5160	8340	6560	2600	2080	2600	8"-150#; 2 x API-660

FOUNDATION LOADS

SADDLE MARK	SUP'T "X"	SUP'T "Y"
TRANSVERSE SHEAR LOAD	7870.91 LBS.	7870.91 LBS.
LONGITUDINAL SHEAR LOAD	15741.83 LBS.	15741.83 LBS.
VERTICAL LOAD	42083.59 LBS.	42847.26 LBS.

DESIGN DATA	SHELL	TUBE
OPERATING PRESSURE PSIG	16	60
OPERATING TEMP. °F.	IN: 164.9 OUT: 105	IN: 80 OUT: 100
HYDROTEST TEMP. °F.	50 deg F (min)	50 deg F (min)
JOINT EFF.	1	1
FLUID NAME	PROD. FRAC. OVHD. VAP.	COOLING WATER
FLUID DENSITY lb/ft^3	IN: 38.99 OUT: 40.369	IN: 62.228 OUT: 62.006
LETHAL SERVICE	NO	NO
DESIGN DUTY Btu/hr	8466283	
WIND CODE	ASCE 7-16 WIND SPEED: 101 MPH IMP. FACTOR: 1	
SEISMIC CODE	ASCE 7-16 IMP. FACTOR: 1.5 Fa: 1 Fv: 1.5	
	Sds: 1.077 Site Class: D Sd_1: 0.996	

PAINT : PAINT SYSTEM 1 (SHELL & TUBE SIDE)

SOLVENT CLEAN PER SSPC-SP1
SANDBLAST PER SSPC-SP10 (1.5-2.5 MILS ANCHOR PROFILE)

PRIMER: ONE COAT SHERWIN WILLIAMS ZINC CLAD II (2.5-4.0 MILS DFT)

INTERM: ONE COAT SHERWIN WILLIAMS MACROPOXY 646 (4.0-6.0 MILS DFT)
(COLOR: MILLWHITE)

FINISH COAT: ONE COAT SHERWIN WILLIAMS ACROLON 218HS
(2.0-3.0 MILS DFT)
(COLOR: LIGHT GRAY RAL #7035)

APPLICABLE SPECIFICATIONS :

3-11-10, 4-11-11, 4WEQ-1051, 4WGN-10001,
4WPI-670210, A8KM-PP-000-40002-A,
A8KM-PP-000-50720-A, A8KM-PP-000-200001-A,
A8KM-PP-000-500005-A, A8KM-PP-000-500510-A,
A8KM-PP-000-500512-A, A8KM-PP-000-500520-A,
A8KM-PP-000-500550-A, FORM 8232,
SPEC-ENG-DOC001, SPEC-ENG-DOC002,
SPEC-ENG-MQ042, SPEC-ENG-MQ057,
SPEC-MED-DOC001

PROJECT NAME: WORLD ENERGY RENEWABLES PROJECT
EQUIPMENT OWNER: AIR PRODUCTS MANUFACTURING LLC
SERVICE: PRODUCT FRACTIONATOR OVERHEAD TRIM CONDENSER
LOCATION: WORLD ENERGY, PARAMOUNT, CA. USA
PRODUCT: FRACTIONATOR OVERHEAD VAPOR
ITEM NO.: 18-X-359
AIR PRODUCTS P.O. NO.: 4505600056 / A8KM-4-402-PO-1
AP PROJECT NO: EN-20-7119
VDR CODE NO.: HC09
SERIAL NO.: S21-13258-4
ENGINEER: GH
CUSTOMER / CLIENT: WORLD ENERGY PARAMOUNT

CHANNEL COVER TO CHANNEL FLANGE BOLTING INFO
STUD DIAMETER: 7/8" O.D.
NUMBER STUDS: (56)
STUD MATERIAL: SA-193-B7
BOLT TORQUE RANGE TO BE ACHIEVED: 448-449 FT. LBS

CHAN. FLG./T'SHT./SHELL FLG. BOLTING INFO
STUD DIAMETER: 7/8" O.D.
NUMBER STUDS: (64)
STUD MATERIAL: SA-193-B7
BOLT TORQUE RANGE TO BE ACHIEVED: 410-416 FT. LBS.

NO.	DATE	REVISIONS
4	1/26/23	REV. PER FABSCO DD/EMG
3	10/19/22	REV. PER CUST. DD/DG
2	8/22/22	REV. PER CUST. B.W./DD
1	7/7/22	REV. PER CUST. GD/DD

SUPPLEMENTAL INFORMATION
ONE 36-204 A E U

DWN. BY B.W.
DATE 4/26/22
CKD. BY *DiCarlo*

Fabsco
SHELL & TUBE, LLC

DWG.NO. S21-13258-4-1A
REV. 4

----------API-660----------

1) STENCIL THE FOLLOWING ON THE EXCHANGER IN 3" HIGH (MIN.) WHITE BLOCK LETTERS::

   P.O. NO.: 4505600056

   ITEM NO.: 18-X-359

   SHIPPING WT.: 20,100#

2) STUDS, NUTS AND THREADED SURFACES SHALL BE COATED WITH MARKAL E-Z- BREAK COMPOUND BEFORE ASSEMBLY.
3) HYDRO TEST PRESSURE SHALL BE HELD FOR A MINIMUM OF ONE HOUR.
4) PLUG SHELL INSIDE DIAMETER WITH A METAL TEMPLATE CONSISTING OF TWO DISCS (EACH HAVING A DIAMETER EQUAL TO THE DIAMETER OF THE BAFFLES) RIGIDLY MOUNTED PERPENDICULAR TO A SHAFT, AND SPACED 12" APART.
5) THE FLATNESS TOLERANCE (MAXIMUM DEVIATION FROM A PLANE) ON PERIPHERAL GASKET CONTACT SURFACES SHALL BE ± 1/32". USE OF A STRAIGHT EDGE TO DETERMINE FLATNESS TOLERANCE IS ACCEPTABLE.
6) FLATNESS OF GASKET SURFACES SHALL BE MEASURED WITH A DIAL INDICATOR. PASS PLATE GROOVES CAN BE MEASURED WITH A STRAIGHT EDGE.
7) WELD METAIL AND HAZ. HARDNESS EXAMINATION REQUIREMENTS ARE AS FOLLOWS (AFTER PWHT, IF REQUIRED):
   - -225 BHN, MAXIMUM.
   - -A 10mm BALL IS REQUIRED FOR TESTING.
   - -TEST ONE LONGITUDINAL AND ONE CIRCUMFERENTIAL WELD AND EACH CONNECTION TO COMPONENT WELD OF NOZZLES 2" NPT AND LARGER.
   - -IF MORE THAN ONE WELDING PROCEDURE IS USED TO PERFORM LONGITUDINAL OR CIRCUMFERENTIAL WELDS, HARDNESS READINGS SHALL BE MADE OF THE WELDS DEPOSITED BY EACH PROCEDURE.
   - -HARDNESS READINGS AND LOCATIONS SHALL BE RECORDED.
   - -TESTING TO BE DONE ON INSIDE SURFACE IF ACCESSIBLE.

----------API-660 CONT.----------

8) COAT EXPOSED MACHINED SURFACES WITH AN EASILY REMOVABLE RUST PREVENTATIVE.
△2 9) NOTIFY CUSTOMER TEN (10) (MNI.) DAYS PRIOR TO START OF FABRICATION, WITNESS OR HOLD POINTS.
10) MATCH MARKS SHALL BE PROVIDED TO ENSURE PROPER ALIGNMENT OF BOLTED JOINTS.
11) STAMP THE SERIAL No. ON O.D. OF TUBESHEETS, FLANGES AND CHANNEL COVERS.
12) HYDRO TEST CHARTS REQUIRED.
13) NOZZLE WELD PADS & SUPT PADS SHALL BE AIR & SOAP TESTED W/15 PSI (MIN), 25 PSI (MAX) AIR PRESSURE.
14) SHELLSIDE HYDRO TEST SHALL BE PERFORMED WITH CHANNEL COVER REMOVED.
15) TUBE WALL REDUCTION SHALL BE 8% MAXIMUM.

----------STANDARD SHOP PRACTICES----------

1) ALL BOLT HOLES SHALL STRADDLE NATURAL CENTERLINES.
2) GRIND INSIDE WELDS FLUSH WITH SHELL.
3) GRIND INSIDE WELDS SMOOTH WITH CHANNELS.
4) RADIUS ALL NOZZLES 1/8" INSIDE AT CYLINDER I.D.
5) SEAL WELD SUPPORT SADDLES WITH 1/4"(MIN) FILLET WELD.
6) EXCHANGER SHALL BE CLEANED INSIDE AND OUTSIDE OF WELD SPATTER, DIRT, WELD ROD AND OTHER DEBRIS.

△2 7)"DELETED"

8) ALL EXTERNAL ATTACHMENTS TO BE SEAL WELDED.
9) ALL LIFTING DEVICE ATTACHMENT WELDS SHALL BE EXAMINED BY THE PT METHOD.
△2 10) INSTALL SHIPPING COVERS ON NOZZLES W/O BLD. FLG'S.
11) ALL SEAL WELDED EXTERNAL NON PRESSURE ATTACHMENTS REQUIRE A 1/4" NPT VENT HOLE.
12) AFTER THE HYDRO TEST, THE HEAT EXCHANGER SHALL BE COMPLETELY DRAINED AND THOROUGHLY DRIED.

--------NDT REQUIREMENTS---------

1) SHELL: FULL RADIOGRAPH.
2) CHANNELS: FULL RADIOGRAPH.

PROJECT NAME: WORLD ENERGY RENEWABLES PROJECT
EQUIPMENT OWNER: AIR PRODUCTS MANUFACTURING LLC
SERVICE: PRODUCT FRACTIONATOR OVERHEAD TRIM CONDENSER
LOCATION: WORLD ENERGY, PARAMOUNT, CA. USA
PRODUCT: FRACTIONATOR OVERHEAD VAPOR
ITEM NO.: 18-X-359
AIR PRODUCTS P.O. NO.: 4505600056 / A8KM-4-402-PO-1
AP PROJECT NO: EN-20-7119
VDR CODE NO.: HCO9
SERIAL NO.: S21-13258-4
ENGINEER: GH
CUSTOMER / CLIENT: WORLD ENERGY PARAMOUNT

NO.	DATE	REVISIONS
△2	8/22/22	REV. PER CUST. B.W./DD
△1	7/12/2022	ADDED DWG/FABSCO GO/DD

JOB NOTES

DWN. BY: GO
DATE: 7/12/22
CKD. BY: *DiCarlo*

Fabsco
SHELL & TUBE, LLC

DWG. NO.: S21-13258-4-1B
REV.: 2

----------CUST. NOTES----------

1) ALL SHARP EDGES SHALL BE GROUND TO A .078" RAD. (MIN.)
2) THE INITIAL ROOT PASS OF DBL WELDED GROOVE JOINTS, INCLUDING ROOT TACK WELDS, SHALL BE CHIPPED, GROUND &/OR GOUGED TO SOUND METAL, AREA TO BE EITHER MPE OR DPE PRIOR TO WELDING FROM OTHER SIDE.
3) PRESSURE CONTAINING WELDS, INTERNAL ATTACHMENT WELDS, & SUPPORT WELDS SHALL BE CONTOURED TO PERMIT PROPER INTERPRETATION OF ANY REQ'D. UT EXAMINATION.
4) ALL WELDING CONSUMABLES SHALL BE OF LOW HYDROGEN TYPE. E60XX ELECTRODES SHALL NOT BE USED!
5) BRINNELL HARDNESS READINGS TO BE PREFORMED ON INSIDE SURFACE WHEN POSSIBLE.
6) TEMPORARY ATTACHMENTS TO BE REMOVED BY MECHANICALLY OR THERMALLY CUT WITHIN 1/8" OF SURFACE. AREA TO BE GROUND FLUSH W/ SURROUNDING AREAS, FOLLOWED BY MPE OR DPE. DO NOT "KNOCK OFF."
7) HYDRO TEST WATER TEMP. AT ALL LOCATIONS SHALL BE AT LEAST 50°F. AT ALL TIMES DURING HYDROTEST.
8) THE TEMPERATURE OF THE HYDROTEST WATER AND THE EXCHANGER SHALL BE EQUALIZED PRIOR TO HYDROTEST.
9) STAMPING TO BE DONE W/ "LOW STRESS" STAMPS.
10) NOZ. TO CYL. WELDS, BRANCH NOZ. WELDS WHICH CAN'T BE X-RAYED SHALL BE UT.
11) ALL ARC STRIKES, START, STOPS SHALL BE CONFINED TO THE WELDING GROOVE OR SHALL BE REMOVED BY LIGHT GRINDING FOLLOWED BY MPT OR DPE.
12) THE USE OF HIGH NICKEL CONTENT C'STL. WELDING CONSUMABLES OR C-1/2Mo CONSUMABLES IS PROHIBITED.
13) ALL WELD SURFACES TO BE VISUALLY INSPECTED TO ENSURE THAT LAMINATIONS &/OR OTHER DEFECTS ARE NOT PRESENT.
14) PEENING IS NOT PERMITTED FOR PURPOSE OF CLEANING WELDS.
15) EXCH'S. TO BE STENCILED W/ THE FOLLOWING"
    "HEIGHT" : 5'-6"
    "WIDTH" : 4'-0"
    "LENGTH" : 23'-0"
    "WEIGHT" : 20,100#
16) FINISHED EXCHANGER IS TO BE WEIGHTED. TO BE WITHIN +/- 2% OR BETTER ACCURACY. A CALIBRATED WEIGHT CERTIFICATE SHALL BE PROVIDED.

----------CUST. NOTES CONT.----------

17) LIFTING POINTS & CENTER OF GRAVITY SHALL BE MARKED ON EXCHANGER.
18) THE ENTIRE SURFACE OF FORGINGS INCLUDING WELD BEVEL SHALL BE EXAMINED BY MT AFTER FINISH MACHINING & PRIOR TO WELDING.
19) EXCHANGER SHALL BE IN A MANNER WHICH KEEPS NOZZLES FROM TOUCHING THE TRUCK BEDS AND/OR SURFACES AT OFF-LOADING AREA AT JOBSITE.
20) PRIOR TO WELDING, JOINTS SHALL BE VISUALLY INSPECTED FOR CLEANLINESS, CONDITION OF TACK WELDS IF PRESENT, PREHEAT IF SPECIFIED, AND FILLER METAL TO BE USED.
21) REQUIRED PREHEAT TEMPERATURE SHALL ALSO APPLY TO THERMAL CUTTING AND TACK WELDING.
22) PREHEAT ALL JOINT TO A MINIMUM OF 125° F. WHEN MOISTURE REMOVAL IS REQUIRED.
△2 23) ALL WELDING SHALL BE IN ACCORDANCE WITH ASME SECT. IX & PROJECT SPECIFICATIONS A8KM-PP-000-500550-A, A8KM-PP-000-500532-A, 4WEQ-1051, 3-11-10, 4-11-11.
△2 24) ALL SHELL & HEAD JOINTS SHALL BE BACK WELDED JOINTS, WHERE POSSIBLE.
△3 △2 25) WELDS FROM EACH WELD PROCEDURE, WELDER/WELDING OPERATOR SHALL BE FULL RADIOGRAPHED IF ACCESSIBLE.
△2 26) NON PRESSURE PARTS TO PRESSURE CONTAINING COMPONENT WELDS SHALL BE 100% M.P.E. OR D.P.E.
△2 27) ALL LONG & CIRC SEAMS, NOZZLE ATTACHMENT WELDS SHALL BE FULL PENETRATION WELDED AS SHOWN ON DWG. -13.
△2 28) FOR OFFSET NOZZLES, THE MIN. THROAT DIMENSIONS SHALL BE MAINTAINED.
△3 29) NON-PRESSURE ATTACHMENT WELDS TO PRESSURE PARTS ON SHELL SIDE (IN FLAMMABLE SERVICE) SHALL BE FULL PENETRATION WELDS.

PROJECT NAME: WORLD ENERGY RENEWABLES PROJECT
EQUIPMENT OWNER: AIR PRODUCTS MANUFACTURING LLC
SERVICE: PRODUCT FRACTIONATOR OVERHEAD TRIM CONDENSER
LOCATION: WORLD ENERGY, PARAMOUNT, CA. USA
PRODUCT: FRACTIONATOR OVERHEAD VAPOR
ITEM NO.: 18-X-359
AIR PRODUCTS P.O. NO.: 4505600056 / A8KM-4-402-PO-1
AP PROJECT NO: EN-20-7119
VDR CODE NO.: HCO9
SERIAL NO.: S21-13258-4
ENGINEER: GH
CUSTOMER / CLIENT: WORLD ENERGY PARAMOUNT

NO.	DATE	REVISIONS
△3	9/29/22	REV. PER CUST. B.W./DD
△2	8/22/22	REV. PER CUST. B.W./DD
△1	7/13/22	ADDED DWG./FABSCO GO/DD

JOB NOTES (CONT.)

DWN. BY GO
DATE 7/13/22
CKD. BY *DiCarlo*

Fabsco SHELL & TUBE, LLC

DWG. NO. S21-13258-4-1C
REV. 3

COVER NOTES:
1) MACHINE ALL COVER SURFACES TO 250 RMS EXCEPT GASKET FACES TO BE 125 RMS.
2) ALL COVER PASS PLATE GROOVE WIDTHS TO BE 1/2" WIDE.
3) ALL COVER PASS PLATE GROOVE JUNCTIONS TO BE NOTCHED 3/8" AT 45 Deg.

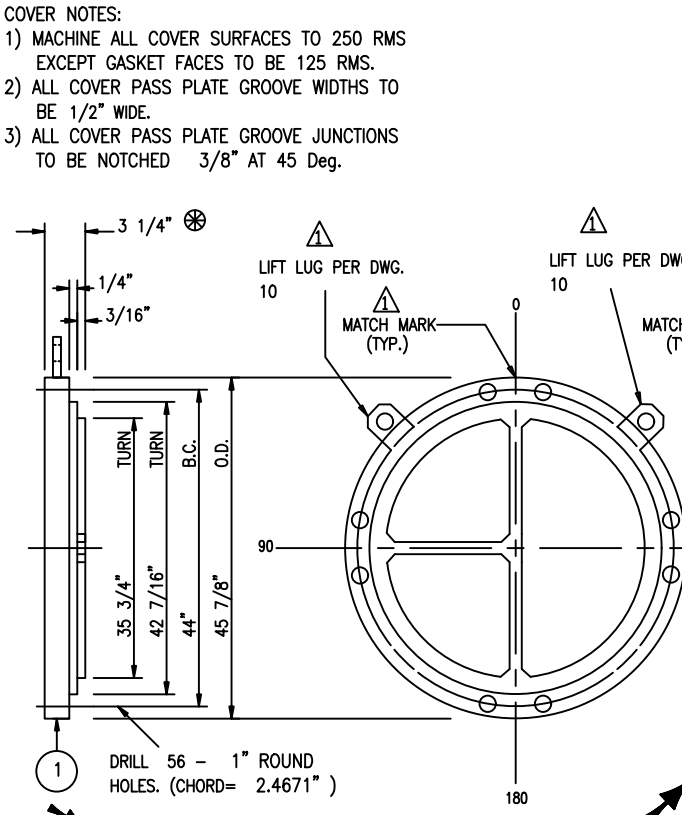

CHANNEL-COVER DETAIL

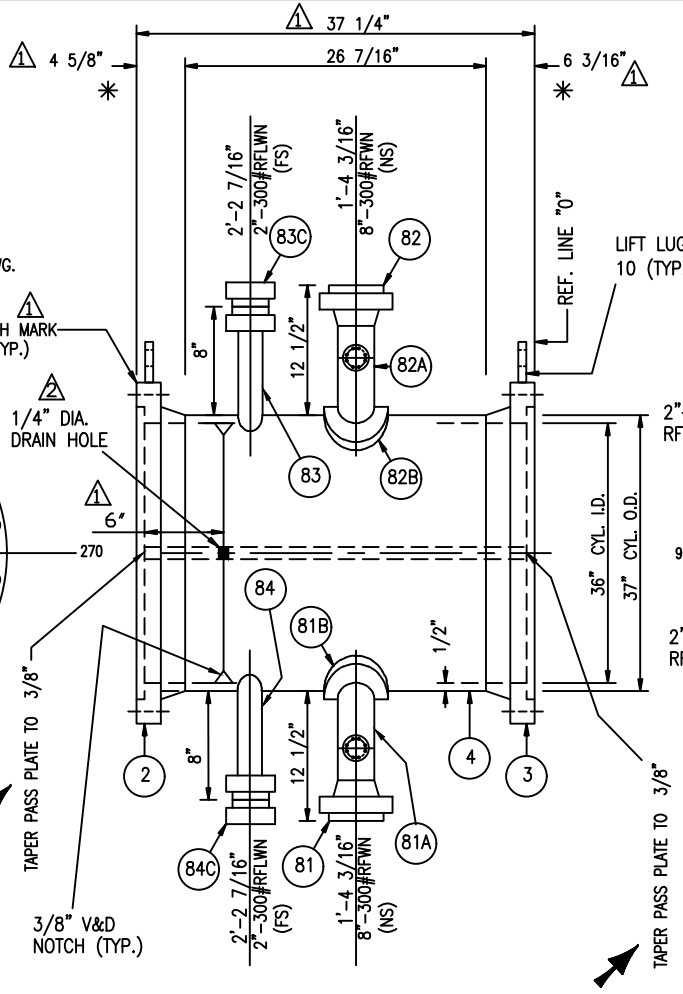

CHANNEL SIDE VIEW

* MACHINE GASKET FACING TO 125 RMS AFTER ALL WELDING.
FOR FLANGE DETAILS SEE DWG. 12

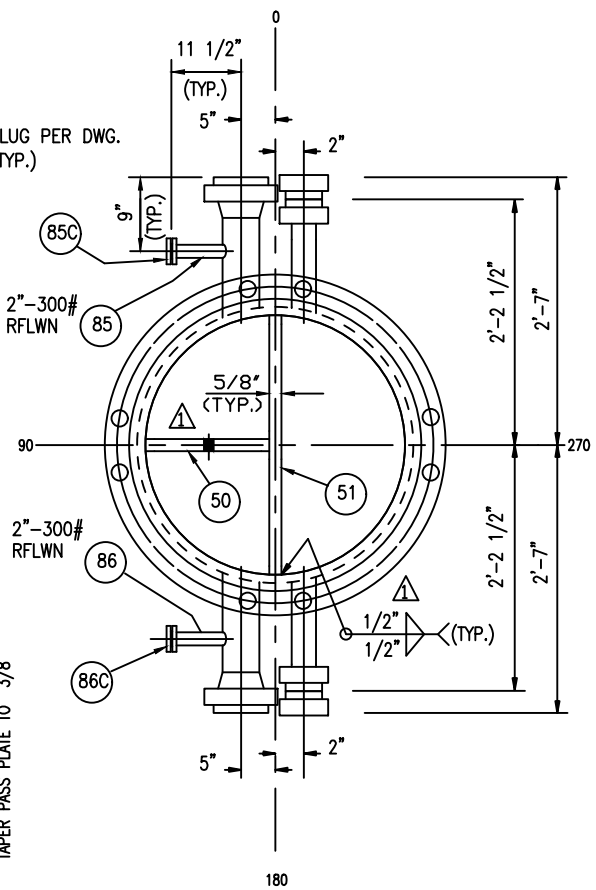

CHANNEL END VIEW

NOTES:

1) ALL WELDING TO BE IN ACCORDANCE W/ PROCEDURES ON DWG. -18.
2) ALL BOLT HOLES TO STRADDLE CENTER LINES.
3) FOR WELD AND BEVEL DETAILS SEE DWG. -13.
4) GRIND ALL INSIDE WELDS SMOOTH.
5) FULL RADIOGRAPHY.

PROJECT NAME: WORLD ENERGY RENEWABLES PROJECT
EQUIPMENT OWNER: AIR PRODUCTS MANUFACTURING LLC
SERVICE: PRODUCT FRACTIONATOR OVERHEAD TRIM CONDENSER
LOCATION: WORLD ENERGY, PARAMOUNT, CA. USA
PRODUCT: FRACTIONATOR OVERHEAD VAPOR
ITEM NO.: 18-X-359
AIR PRODUCTS P.O. NO.:4505600056 / A8KM-4-402-PO-1
AP PROJECT NO: EN-20-7119
VDR CODE NO.: BE04
SERIAL NO.: S21-13258-4
ENGINEER: GH
CUSTOMER / CLIENT: WORLD ENERGY PARAMOUNT

NO.	DATE	REVISIONS	
2	8/22/22	REV. PER CUST.	B.W./DD
1	7/7/22	REV. PER CUST.	GD/DD

FRONT CHANNEL DETAILS

DWN. BY B.W.
DATE 4/29/22
CKD. BY *DiCarlo*

Fabsco
SHELL & TUBE, LLC

DWG.NO. S21-13258-4-2
REV. 2

FOR FLANGE DETAILS SEE DWG. 12

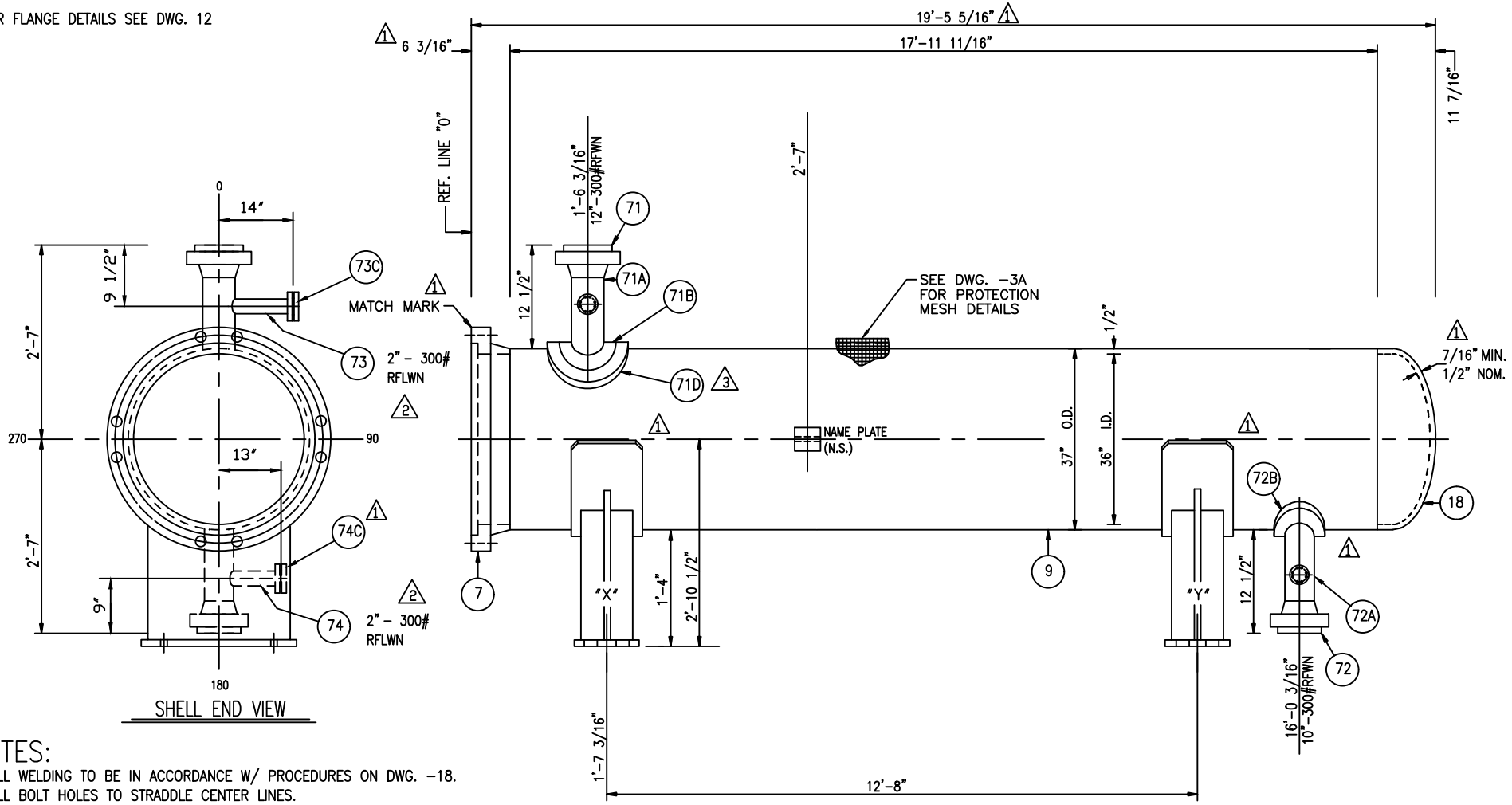

SHELL END VIEW

SHELL SIDE VIEW

NOTES:

1) ALL WELDING TO BE IN ACCORDANCE W/ PROCEDURES ON DWG. -18.
2) ALL BOLT HOLES TO STRADDLE CENTER LINES.
3) FOR WELD AND BEVEL DETAILS SEE DWG. -13.
4) FOR SUPPORT DETAILS SEE DWG. -9.
5) GRIND ALL INSIDE WELDS FLUSH.
6) FULL RADIOGRAPHY.

PROJECT NAME: WORLD ENERGY RENEWABLES PROJECT
EQUIPMENT OWNER: AIR PRODUCTS MANUFACTURING LLC
SERVICE: PRODUCT FRACTIONATOR OVERHEAD TRIM CONDENSER
LOCATION: WORLD ENERGY, PARAMOUNT, CA. USA
PRODUCT: FRACTIONATOR OVERHEAD VAPOR
ITEM NO.: 18-X-359
AIR PRODUCTS P.O. NO.:4505600056 / A8KM-4-402-PO-1
AP PROJECT NO: EN-20-7119
VDR CODE NO.: BE04
SERIAL NO.: S21-13258-4
ENGINEER: GH
CUSTOMER / CLIENT: WORLD ENERGY PARAMOUNT

NO.	DATE	REVISIONS
3	3/10/23	REV. PER CUST. COMMENTS DD/DG
2	8/22/22	REV. PER CUST. BW/DD
1	7/7/22	REV. PER CUST. GD/DD

SHELL DETAILS

DWN. BY B.W.
DATE 4/30/22
CKD. BY *DiCarlo*

Fabsco
SHELL & TUBE, LLC

DWG.NO. S21-13258-4-3
REV. 3

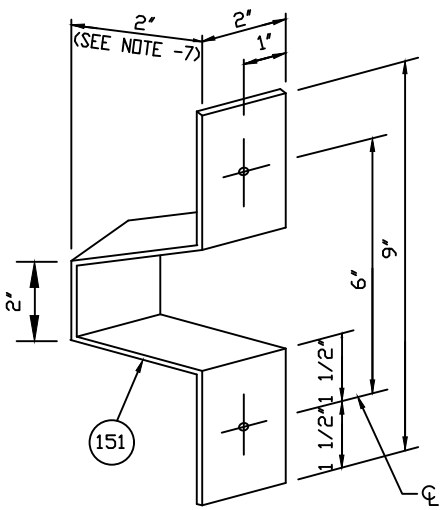

STAND-OFF CLIP DETAIL

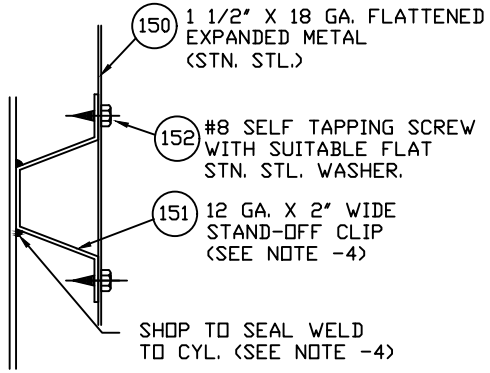

⚠2 INSTALLATION DETAIL
(SEE NOTE -2)

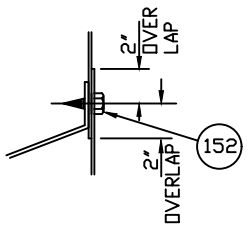

OVERLAP DETAIL

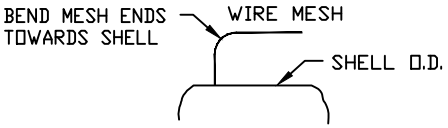

DET'L. "C"

GENERAL NOTES

1. APPLICABLE SPECIFICATIONS. ABKM-PP-000-500540-A GALVANIZING SPECIFICATION.
2. STAND-OFF CLILPS SHALL BE INSTALLED IN ROWS AT 24" SPACING IN TWO (2) DIRECTIONS. MAX. DISTANCE FROM EDGE OF EXPANDED METAL TO CENTERLINE OF STAND-OFFS SHALL BE 6".
3. EXPANDED METAL SHALL BE PRE-ROLLED OR FORMED WITH ALL EXPOSED EDGES CUT SUCH THAT FULL DIAMONDS FORM A CLEAN EDGE AND ALL SHARP EDGES ARE SMOOTH AND FREE OF BURRS.
4. STAND OFF CLIPS SHALL BE SHOP WELDED TO THE CYL/HD & BE THE SAME MATERIAL. BOLTING HARDWARE & EXPANDED METAL SHALL BE STN. STL.
5. ALL PARTS INCLUDING HARDWARE SHALL BE SUPPLIED BY THE EQUIPMENT MANUFACTURER.
6. ALL PARTS SHALL BE IDENTIFIED WITH A METAL TAG INDICATING ITEM NO., PO NO. & PIECE MARK NO. INSTALLATION HARDWARE SHALL BE BOXED & TAGGED AS ABOVE WITH TEN PERCENT (10%) EXTRA TO ACCOUNT FOR LOSS OR DAMAGE.
7. STANDOFF DISTANCE SHALL BE 2" MIN.
⚠1 8. MESH SHALL BE INSTALLED AT SITE AFTER INSTALLATION OF EXCHANGER.

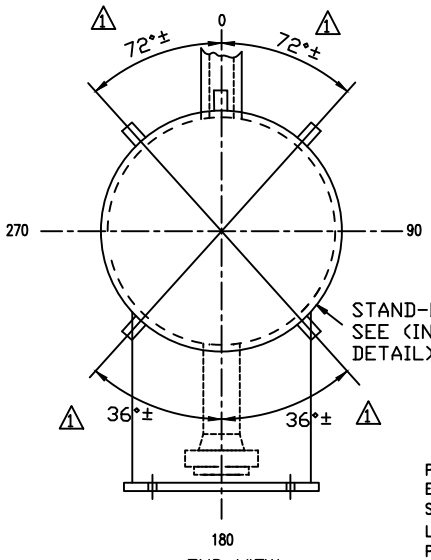

END VIEW

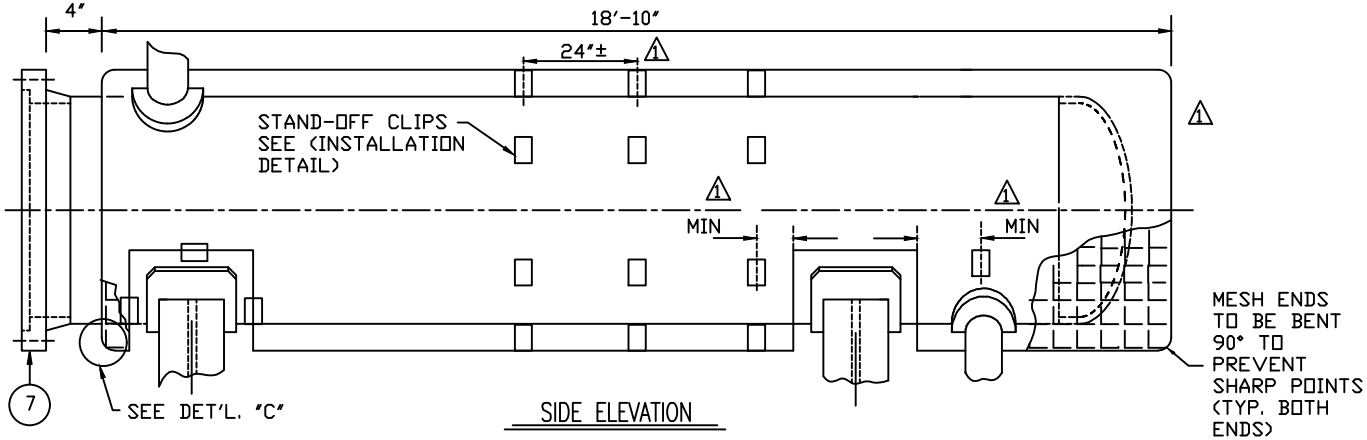

SIDE ELEVATION

PROJECT NAME: WORLD ENERGY RENEWABLES PROJECT
EQUIPMENT OWNER: AIR PRODUCTS MANUFACTURING LLC
SERVICE: PRODUCT FRACTIONATOR OVERHEAD TRIM CONDENSER
LOCATION: WORLD ENERGY, PARAMOUNT, CA. USA
PRODUCT: FRACTIONATOR OVERHEAD VAPOR
ITEM NO.: 18-X-359
AIR PRODUCTS P.O. NO.: 4505600056 / A8KM-4-402-PO-1
AP PROJECT NO: EN-20-7119
VDR CODE NO.: BE04
SERIAL NO.: S21-13258-4
ENGINEER: GH
CUSTOMER / CLIENT: WORLD ENERGY PARAMOUNT

NO.	DATE	REVISIONS
⚠2	8/22/22	REV. PER CUST. BW/DD
⚠1	7/7/22	REV. PER CUST. GD/DD

SHELL MESH DETAILS

DWN. BY B.W.
DATE 4/30/22
CKD. BY DiCarlo

Fabsco
SHELL & TUBE, LLC

DWG.NO. S21-13258-4-3A
REV. 2

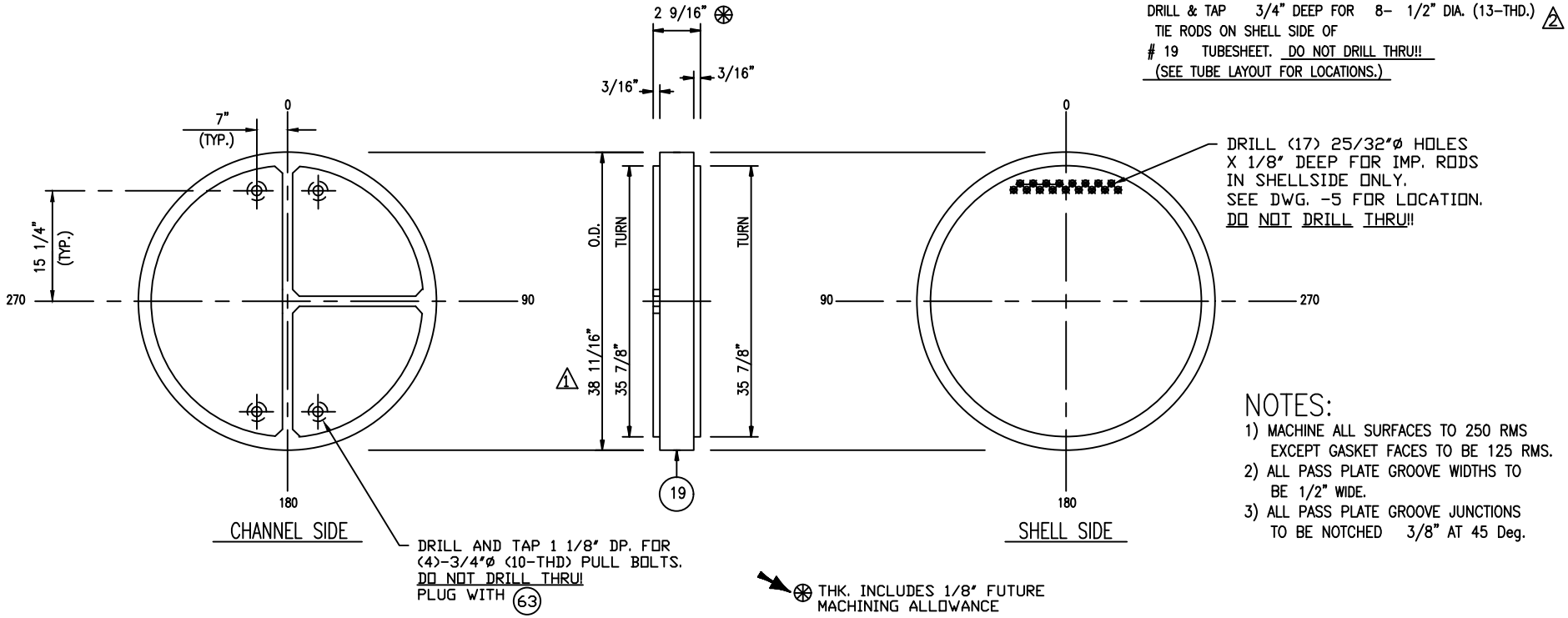

NOTES:

1) MACHINE ALL SURFACES TO 250 RMS EXCEPT GASKET FACES TO BE 125 RMS.
2) ALL PASS PLATE GROOVE WIDTHS TO BE 1/2" WIDE.
3) ALL PASS PLATE GROOVE JUNCTIONS TO BE NOTCHED 3/8" AT 45 Deg.

SEE DWG. -4A FOR SEAL WELD & TUBE HOLE GROOVING DETAIL

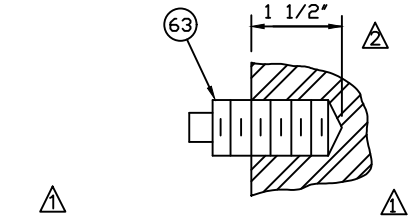

1 SQUARE HEAD EYEBOLT PLUG DETAIL

2 (65) EYEBOLT (TO SHIP LOOSE W/ EXCHANGER)

PROJECT NAME: WORLD ENERGY RENEWABLES PROJECT
EQUIPMENT OWNER: AIR PRODUCTS MANUFACTURING LLC
SERVICE: PRODUCT FRACTIONATOR OVERHEAD TRIM CONDENSER
LOCATION: WORLD ENERGY, PARAMOUNT, CA. USA
PRODUCT: FRACTIONATOR OVERHEAD VAPOR
ITEM NO.: 18-X-359
AIR PRODUCTS P.O. NO.: 4505600056 / A8KM-4-402-PO-1
AP PROJECT NO: EN-20-7119
VDR CODE NO.: BE04
SERIAL NO.: S21-13258-4
ENGINEER: GH
CUSTOMER / CLIENT: WORLD ENERGY PARAMOUNT

NO.	DATE	REVISIONS
2	8/22/22	REV. PER CUST. B.W.DD
1	7/7/22	REV. PER CUST. GD/DD

TUBESHEET DETAILS

DWN. BY B.W.
DATE 5/2/22
CKD. BY *DiCarlo*

Fabsco
SHELL & TUBE, LLC

DWG.NO. S21-13258-4-4
REV. 2

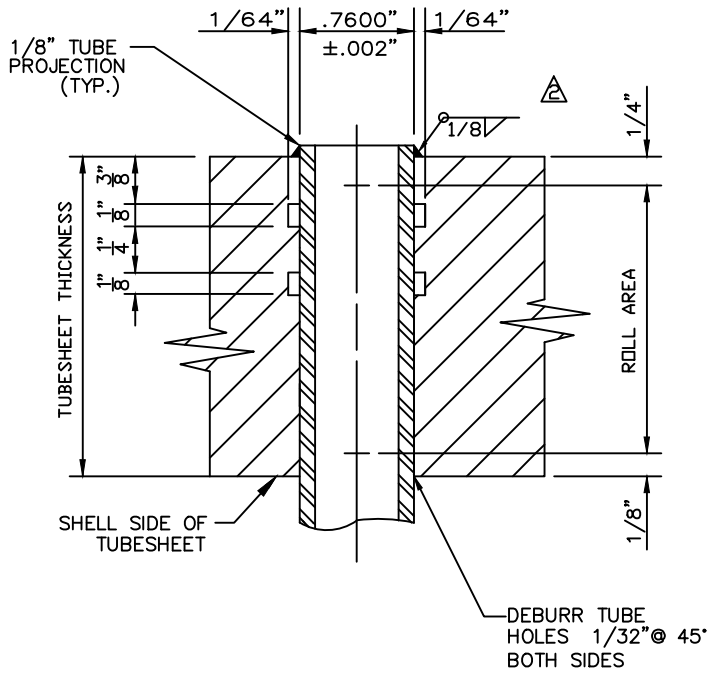

TUBE TO TUBESHEET SEAL WELD AND FABRICATION SEQUENCE

* *

1. DRILL, REAM AND RING GROOVE TUBE HOLES PER DETAIL ABOVE.
2. CLEAN AREAS TO BE WELDED AND ROLLED WITH DEGREASER.
3. INSTALL TUBES IN BUNDLE AND SET PROJECTIONS.
4. FUSION WELD USING GTAW PROCESS USING WPS: T-234.
5. LIQUID PENETRANT EXAMINE ALL WELDS AND THEN CLEAN THEM WITH DEGREASER. REPAIR ANY DEFECTIVE WELDS AND RECHECK.
6. TUBE-TO-T'SHT. WELDS SHALL BE AIR & SOAP TESTED PRIOR TO FINAL ROLLING W/ 15 PSI (MAX.) AIR PRESSURE.
7. ROLL TUBES INTO TUBESHEET PER DETAIL ABOVE.
8. REPEAT STEP 5.
9. TUBE WALL REDUCTION SHALL BE 8% (MAX.) 2

PROJECT NAME: WORLD ENERGY RENEWABLES PROJECT
EQUIPMENT OWNER: AIR PRODUCTS MANUFACTURING LLC
SERVICE: PRODUCT FRACTIONATOR OVERHEAD TRIM CONDENSER
LOCATION: WORLD ENERGY, PARAMOUNT, CA. USA
PRODUCT: FRACTIONATOR OVERHEAD VAPOR
ITEM NO.: 18-X-359
AIR PRODUCTS P.O. NO.: 4505600056 / A8KM-4-402-PO-1
AP PROJECT NO: EN-20-7119
VDR CODE NO.: BE04
SERIAL NO.: S21-13258-4
ENGINEER: GH
CUSTOMER / CLIENT: WORLD ENERGY PARAMOUNT

NO.	DATE	REVISIONS
2	8/22/22	REV. PER CUST. B.W./DD
1	7/7/22	REV. PER FABSCO GO/DD

TUBE SEAL WELD
& TUBE HOLE GROOVING DETAIL

DWN. BY B.W.
DATE 5/3/22
CKD. BY *DiCarlo*

Fabsco
SHELL & TUBE, LLC

DWG.NO. S21-13258-4-4A 1
REV. 2

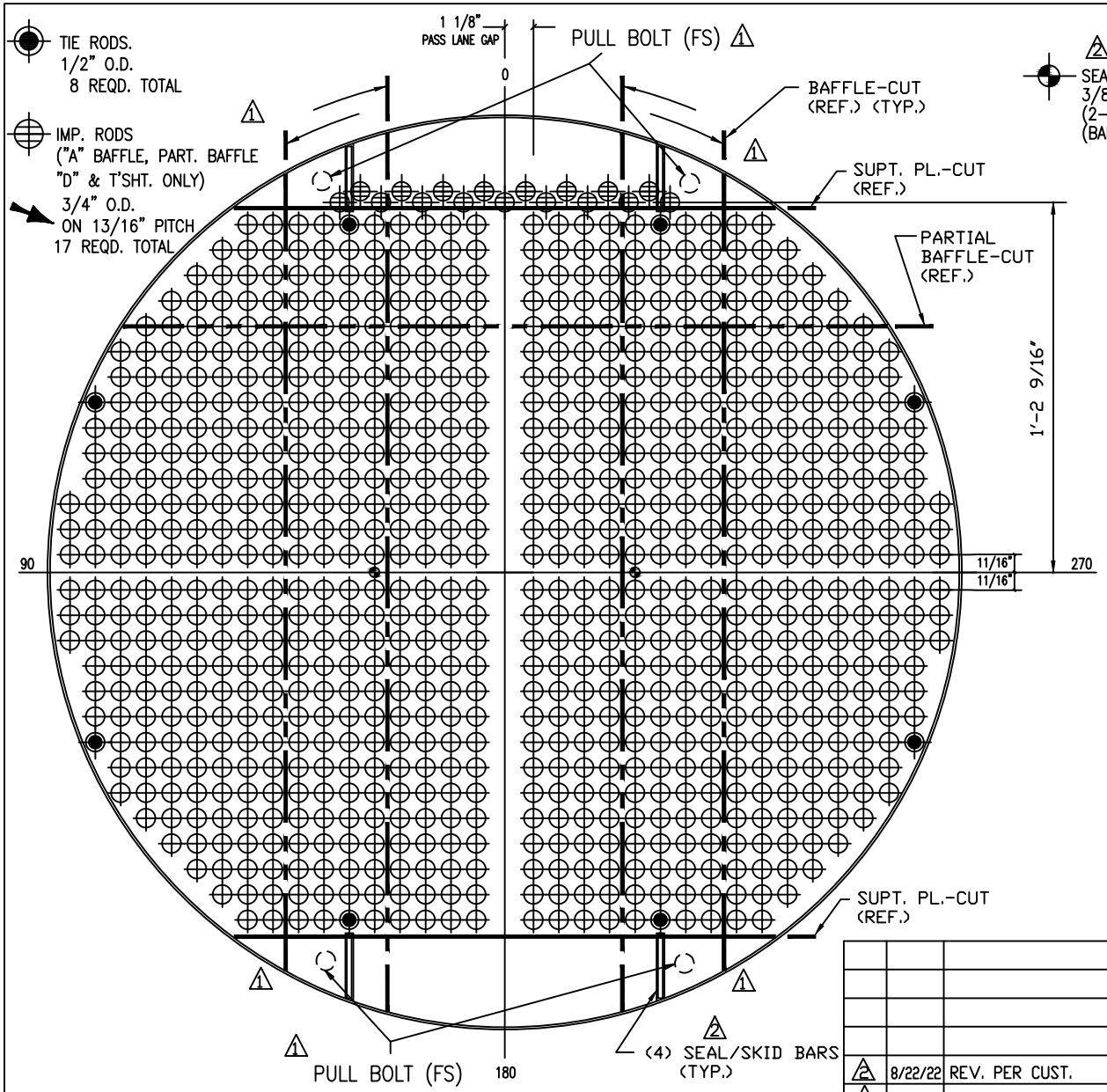

VIEW LOOKING AT SHELL SIDE OF NO. 19 TUBESHEET

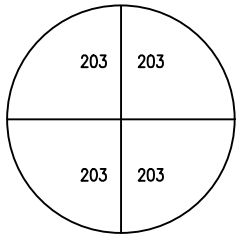

TUBE DISTRIBUTION

NOTES:

1) DRILL AND REAM TUBE HOLES IN
   TUBESHEETS TO 0.7600" +- 0.0020" DIA.
   FOR 406 - 3/4" O.D. U-TUBES.
   TOTAL HOLES = 812
2) TUBE PITCH = 1" SQUARE.
3) NUMBER OF PASSES = 4
4) SEE DRAWING 4A
   FOR TUBE GROOVING DETAILS.
5) BAFFLE O.D. = 35 13/16"
6) O.T.L. = 35 11/16"

PROJECT NAME: WORLD ENERGY RENEWABLES PROJECT
EQUIPMENT OWNER: AIR PRODUCTS MANUFACTURING LLC
SERVICE: PRODUCT FRACTIONATOR OVERHEAD TRIM CONDENSER
LOCATION: WORLD ENERGY, PARAMOUNT, CA. USA
PRODUCT: FRACTIONATOR OVERHEAD VAPOR
ITEM NO.: 18-X-359
AIR PRODUCTS P.O. NO.:4505600056 / A8KM-4-402-PO-1
AP PROJECT NO: EN-20-7119
VDR CODE NO.: BE04
SERIAL NO.: S21-13258-4
ENGINEER: GH
CUSTOMER / CLIENT: WORLD ENERGY PARAMOUNT

NO.	DATE	REVISIONS
2	8/22/22	REV. PER CUST. B.W./DD
1	7/7/22	REV. PER CUST. GD/DD

TUBE LAYOUT

DWN. BY B.W.
DATE 4/26/22
CKD. BY *DiCarlo*

Fabsco
SHELL & TUBE, LLC

DWG.NO. S21-13258-4-5
REV. 2

ROW	NO.OF TUBES	BEND RADIUS	BEND DIAMETER	BEND LENGTH	STRAIGHT LENGTH	CUT LENGTH	DEVELOPED LENGTH
A	28	1 1/8"	2 1/4"	0'-3 9/16"	17'-0"	17'-1 1/2"	34'-3 9/16"
B	28	2 1/8"	4 1/4"	0'-6 11/16"	17'-0"	17'-2 1/2"	34'-6 11/16"
C	28	3 1/8"	6 1/4"	0'-9 7/8"	17'-0"	17'-3 1/2"	34'-9 7/8"
D	28	4 1/8"	8 1/4"	1'-1"	17'-0"	17'-4 1/2"	35'-1"
E	28	5 1/8"	10 1/4"	1'-4 1/8"	17'-0"	17'-5 1/2"	35'-4 1/8"
F	26	6 1/8"	12 1/4"	1'-7 1/4"	17'-0"	17'-6 1/2"	35'-7 1/4"
G	28	7 1/8"	14 1/4"	1'-10 7/16"	17'-0"	17'-7 1/2"	35'-10 7/16"
H	28	8 1/8"	16 1/4"	2'-1 9/16"	17'-0"	17'-8 1/2"	36'-1 9/16"
J	28	9 1/8"	18 1/4"	2'-4 11/16"	17'-0"	17'-9 1/2"	36'-4 11/16"
K	28	10 1/8"	20 1/4"	2'-7 13/16"	17'-0"	17'-10 1/2"	36'-7 13/16"
L	26	11 1/8"	22 1/4"	2'-11"	17'-0"	17'-11 1/2"	36'-11"
M	24	12 1/8"	24 1/4"	3'-2 1/8"	17'-0"	18'-0 1/2"	37'-2 1/8"
N	22	13 1/8"	26 1/4"	3'-5 1/4"	17'-0"	18'-1 1/2"	37'-5 1/4"
O	20	14 1/8"	28 1/4"	3'-8 3/8"	17'-0"	18'-2 1/2"	37'-8 3/8"
P	18	15 1/8"	30 1/4"	3'-11 9/16"	17'-0"	18'-3 1/2"	37'-11 9/16"
Q	12	16 1/8"	32 1/4"	4'-2 11/16"	17'-0"	18'-4 1/2"	38'-2 11/16"
R	6	17 1/8"	34 1/4"	4'-5 13/16"	17'-0"	18'-5 1/2"	38'-5 13/16"

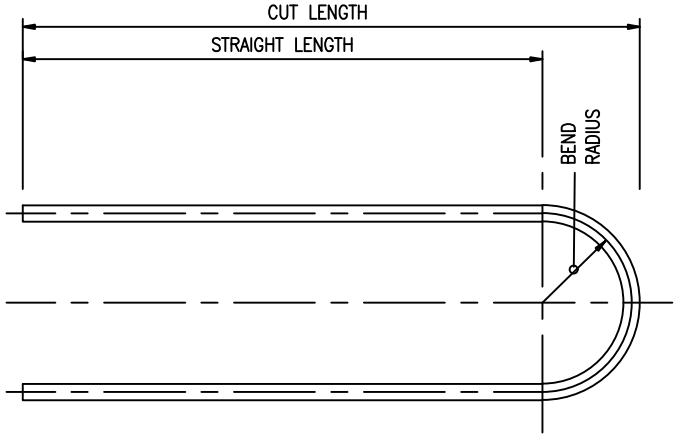

TOTAL NO. REQUIRED: 406
SIZE: 3/4" (.083" MIN.)
MATERIAL: SA-179

MAXIMUM OUT-OF-ROUNDNESS OF TUBES AT U-BENDS NOT TO EXCEED 10%.

QUANTITIES SHOWN ARE FOR ONE SET OF U-TUBES, 1 -SET REQ'D. TOTAL.

1. STRESS RELIEF U-BENDS PLUS 1'-0" OF STRAIGHT LGTH. @ 1175° F. ± 25°F. BY ELECTRIC RESISTANCE METHOD.

PROJECT NAME: WORLD ENERGY RENEWABLES PROJECT
EQUIPMENT OWNER: AIR PRODUCTS MANUFACTURING LLC
SERVICE: PRODUCT FRACTIONATOR OVERHEAD TRIM CONDENSER
LOCATION: WORLD ENERGY, PARAMOUNT, CA. USA
PRODUCT: FRACTIONATOR OVERHEAD VAPOR
ITEM NO.: 18-X-359
AIR PRODUCTS P.O. NO.: 4505600056 / A8KM-4-402-PO-1
AP PROJECT NO: EN-20-7119
VDR CODE NO.: BE04
SERIAL NO.: S21-13258-4
ENGINEER: GH
CUSTOMER / CLIENT: WORLD ENERGY PARAMOUNT

NO.	DATE	REVISIONS
2	9/29/22	NO REV. RESUBMIT FOR APP'L. B.W./DD
1	8/22/22	REV. PER CUST. B.W./DD

TUBE BENDING SCHEDULE

DWN. BY B.W.
DATE 4/16/22
CKD. BY *DiCarlo*

Fabsco
SHELL & TUBE, LLC

DWG.NO. S21-13258-4-6
REV. 2

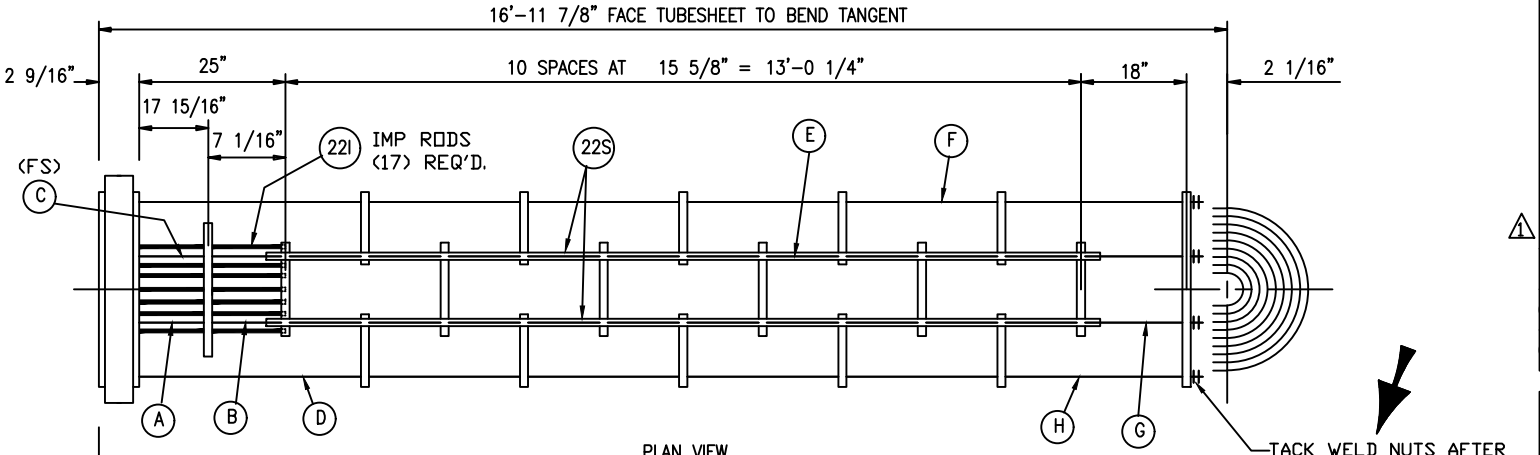

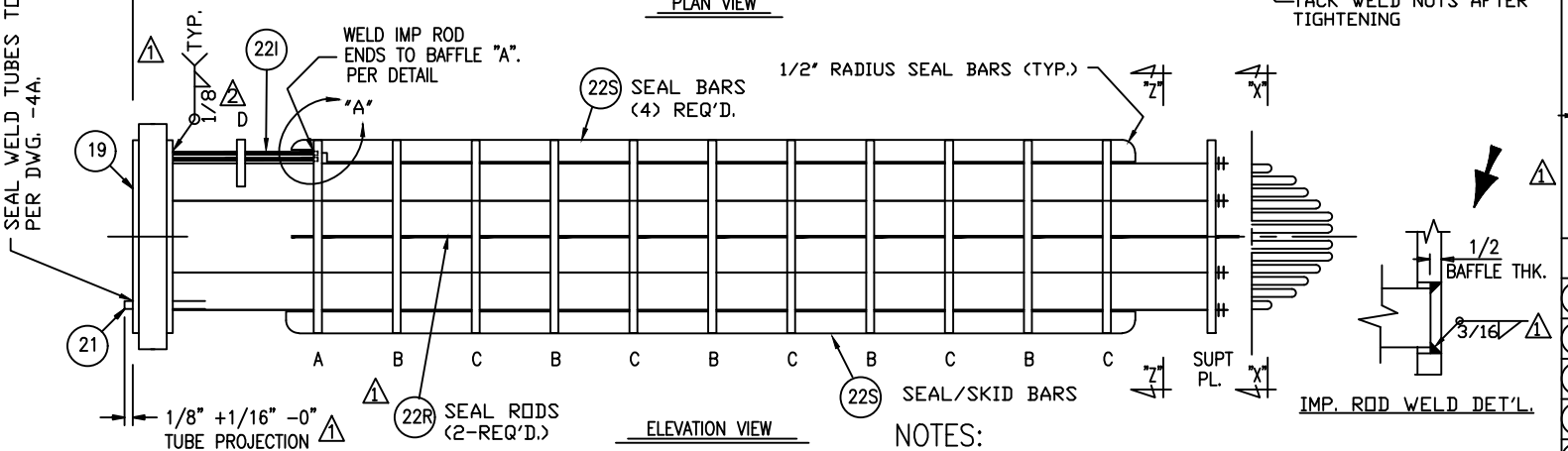

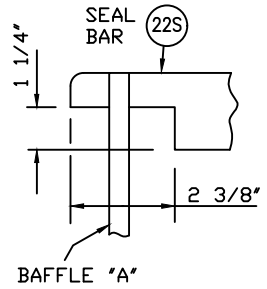

VIEW "A"
(TOP (2) SEAL BARS ONLY)

NOTES:
1) FOR SECTION AND VIEW DETAILS SEE DWG. 8
2) WELD SEAL/SKID BARS TO INTERSECTING BAFFLES ON TWO OPPOSING SIDES. TO PROJECT 1" PAST BAFFLES. RADIUS EACH END OF SEAL/SKID BARS. 1/4"(MIN.) FILLET WELD. 2
3) SKID BARS TO PROJECT 1/32" PAST THE BAFFLE O.D.
4) SEAL RODS SHALL EXTEND 1" PAST FIRST AND LAST BAFFLE. WELD TO FIRST AND LAST BAFFLE. 1/4"(MIN.) FILLET WELD. 2

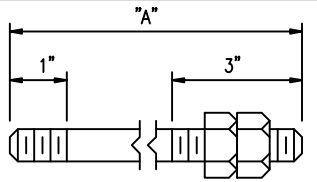

1 MAT'L. SA-36
1/2" -13 NC O.D. TIE RODS (23)

	REQ'D.	"A"
1	8	16'-9 3/4"
2		

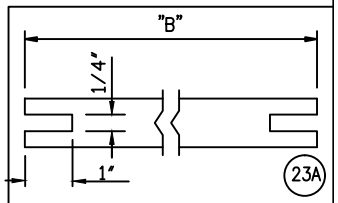

MAT'L. SA-214
SLOTS @ 0° & 180°
3/4" O.D. SPACER TUBING

	REQ'D.	"B"
A	2	17 3/4"
B	2	6 11/16"
C	2	24 13/16"
D	4	40 7/16"
E	40	15 1/4"
F	16	30 7/8"
G	4	17 5/8"
H	4	33 1/4"

PROJECT NAME: WORLD ENERGY RENEWABLES PROJECT
EQUIPMENT OWNER: AIR PRODUCTS MANUFACTURING LLC
SERVICE: PRODUCT FRACTIONATOR OVERHEAD TRIM CONDENSER
LOCATION: WORLD ENERGY, PARAMOUNT, CA. USA
PRODUCT: FRACTIONATOR OVERHEAD VAPOR
ITEM NO.: 18-X-359
AIR PRODUCTS P.O. NO.:4505600056 / A8KM-4-402-P0-1
AP PROJECT NO: EN-20-7119
VDR CODE NO.: BE04
SERIAL NO.: S21-13258-4
ENGINEER: GH
CUSTOMER / CLIENT: WORLD ENERGY PARAMOUNT

NO.	DATE	REVISIONS
3	9/29/22	REV. REVISION # BELOW B.W./DD
2	8/22/22	REV. PER CUST. B.W./DD
1	7/7/22	REV. PER CUST. GD/DD

BUNDLE DETAILS

DWN. BY B.W.
DATE 5/3/22
CKD. BY *DiCarlo*

Fabsco
SHELL & TUBE, LLC

DWG.NO. S21-13258-4-7
REV. 3

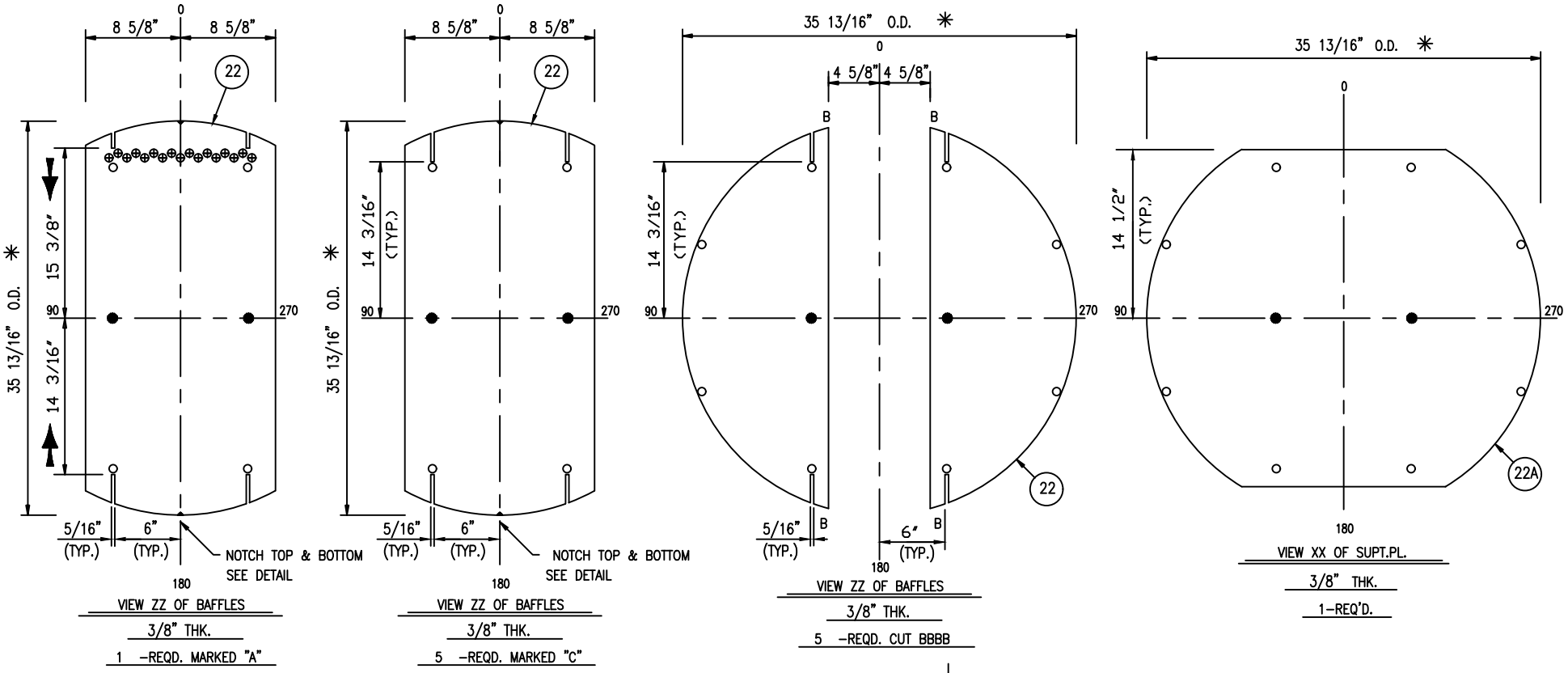

VIEW ZZ OF BAFFLES
3/8" THK.
1 -REQD. MARKED "A"

VIEW ZZ OF BAFFLES
3/8" THK.
5 -REQD. MARKED "C"

VIEW ZZ OF BAFFLES
3/8" THK.
5 -REQD. CUT BBBB

VIEW XX OF SUPT.PL.
3/8" THK.
1-REQ'D.

⊕ DENOTES (17) 25/32" HOLES FOR 3/4" O.D. IMP. RODS. "DRILL BAFFLE "A" ONLY" (SEE TUBE LAYOUT FOR LOCATION)

● DRILL (2) 7/16"ø HOLES FOR 3/8" ø SEAL RODS ⚠1 (SEE TUBE LAYOUT FOR LOCATION)

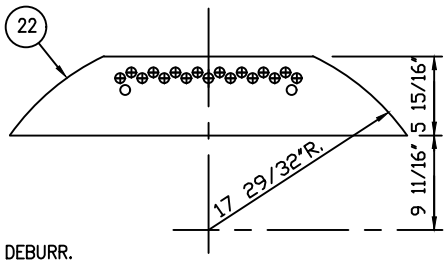

VIEW ZZ OF BAFFLES
3/8" THK.
1 -REQD. MARKED "D"

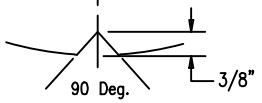

NOTCH DETAIL

NOTES:

1) DRILL TUBE HOLES IN BAFFLES 25/32" DIA. & DEBURR.
2) DRILL TIE ROD HOLES 9/16" DIA. SEE TUBE LAYOUT FOR LOCATION.
3) RADIUS ALL CORNERS ON BAFFLE CUTS.
✳ 4) CHECK SHELL I.D. BEFORE MACHINING BAFFLE O.D.
5) MACHINE O.D. OF BAFFLES TO 250 RMS.

PROJECT NAME: WORLD ENERGY RENEWABLES PROJECT
EQUIPMENT OWNER: AIR PRODUCTS MANUFACTURING LLC
SERVICE: PRODUCT FRACTIONATOR OVERHEAD TRIM CONDENSER
LOCATION: WORLD ENERGY, PARAMOUNT, CA. USA
PRODUCT: FRACTIONATOR OVERHEAD VAPOR
ITEM NO.: 18-X-359
AIR PRODUCTS P.O. NO.: 4505600056 / A8KM-4-402-PO-1
AP PROJECT NO: EN-20-7119
VDR CODE NO.: BE04
SERIAL NO.: S21-13258-4
ENGINEER: GH
CUSTOMER / CLIENT: WORLD ENERGY PARAMOUNT

NO.	DATE	REVISIONS
⚠1	8/22/22	REV. PER CUST. B.W./DD

BAFFLE DETAILS

DWN. BY B.W.
DATE 4/26/22
CKD. BY *DiCarlo*

Fabsco
SHELL & TUBE, LLC

DWG.NO. S21-13258-4-8
REV. 1

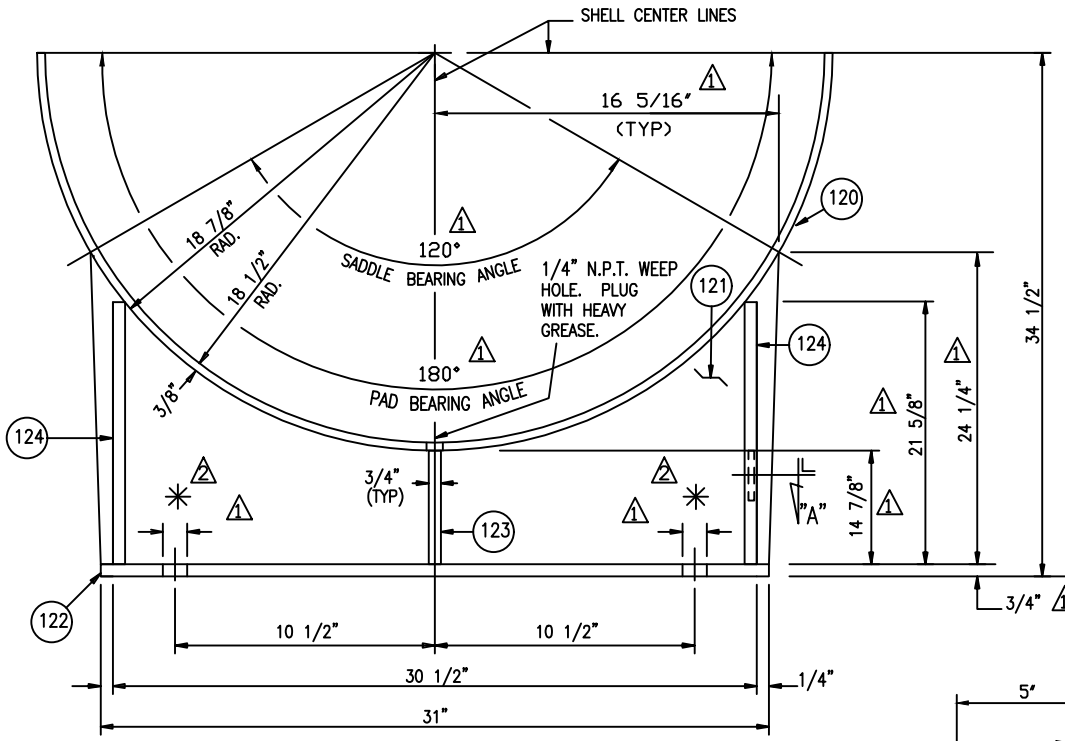

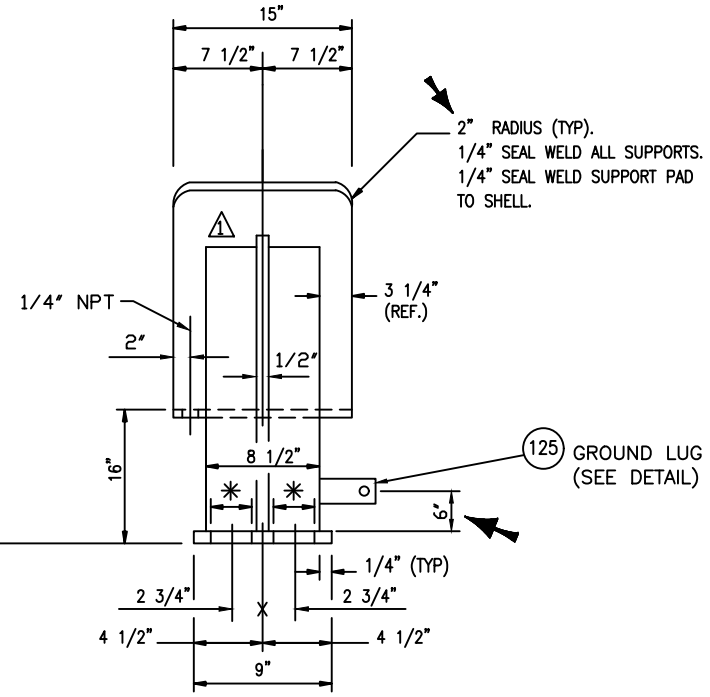

✳ ONE REQUIRED MARKED "X" W/ (4) 1 5/16" X 1 13/16" LG. SLOTS 1
ONE REQUIRED MARKED "Y" W/ (4) 1 5/16" ROUND HOLES. 1

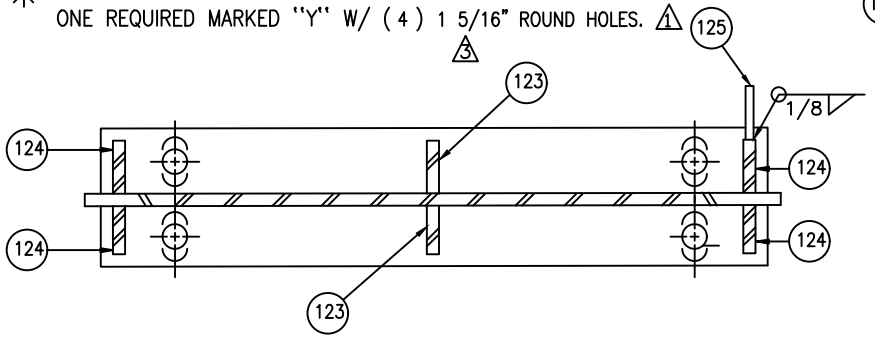

SECTION "A-A"

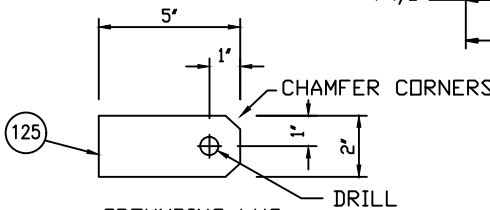

GROUNDING LUG
(1) REQ'D. FS ON SUPT. MK "X", (1) REQ'D. NS ON SUPT. MK "Y".
1/4" THK.
MATERIAL: SA-240-304

PROJECT NAME: WORLD ENERGY RENEWABLES PROJECT
EQUIPMENT OWNER: AIR PRODUCTS MANUFACTURING LLC
SERVICE: PRODUCT FRACTIONATOR OVERHEAD TRIM CONDENSER
LOCATION: WORLD ENERGY, PARAMOUNT, CA. USA
PRODUCT: FRACTIONATOR OVERHEAD VAPOR
ITEM NO.: 18-X-359
AIR PRODUCTS P.O. NO.:4505600056 / A8KM-4-402-PO-1
AP PROJECT NO: EN-20-7119
VDR CODE NO.: BE04
SERIAL NO.: S21-13258-4
ENGINEER: GH
CUSTOMER / CLIENT: WORLD ENERGY PARAMOUNT

NO.	DATE	REVISIONS
3	1/26/23	REV. PER FABSCO DD/DG
2	8/22/22	REV. PER CUST. B.W./DD
1	7/7/22	REV. PER CUST. GO/DD

SUPPORT DETAILS

DWN. BY B.W.
DATE 5/3/22
CKD. BY DiCarlo

Fabsco
SHELL & TUBE, LLC

DWG.NO. S21-13258-4-9
REV. 3

* TO BE ASSIGNED AT TIME OF SHIPMENT

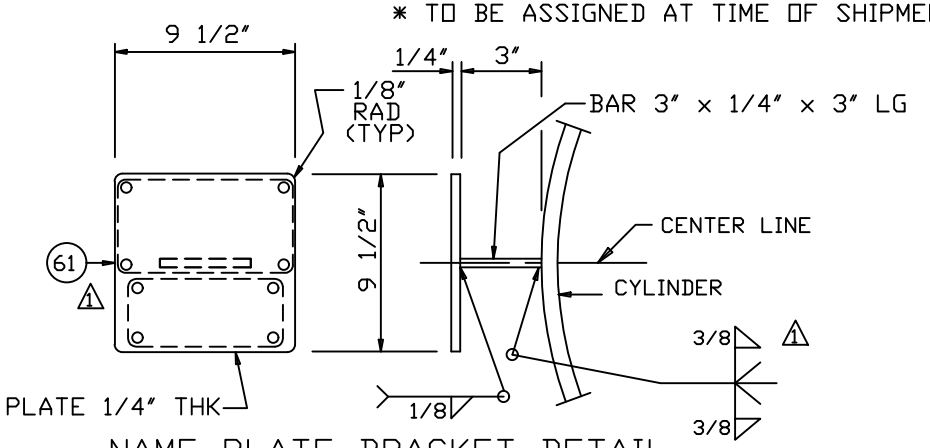

NAME PLATE BRACKET DETAIL

(ONE) REQUIRED

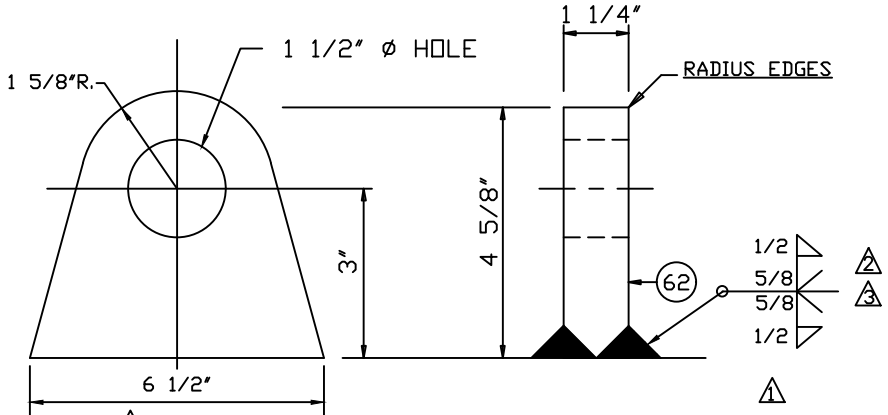

LIFTING LUG DETAIL

4-REQUIRED

MATERIAL: 18-8 STN. STL.(16 GA)

60

U

RT-1

NAT'L BD. *

CERTIFIED BY

FABSCO SHELL & TUBE, LLC

SAPULPA, OKLAHOMA

	MAWP		MAWT	
SHELL	128	PSI AT	300	° F.
	MAEWP		**MAWT**	
SHELL	15	PSI AT	300	°F.
	MDMT		**MAWP**	
SHELL	32	°F. AT	128	PSI
	MAWP		**MAWT**	
TUBES	128	PSI AT	150	° F.
	MAEWP		**MAWT**	
TUBES	N/A	PSI AT	N/A	°F.
	MDMT		**MAWP**	
TUBES	32	°F. AT	128	PSI

SERIAL NUMBER	YEAR BUILT	ITEM/TAG NUMBER
S21-13258-4	2022	18-X-359

P.O. NO.: 4505600056 WEIGHT: 20,100 LBS.

PRODUCT FRACTIONATOR OVERHEAD TRIM CONDENSER

INFORMATION NAME PLATE

HYDRO TEST PRESS PSIG..TUBESIDE: SHOP-172/FIELD-167

HYDRO TEST PRESS PSIG..SHELLSIDE: SHOP-188/FIELD-167

DESIGN PRESS.: SHELLSIDE=125 PSI; TUBESIDE=120 PSI

SECT. VIII, DIV 1, 2021 ED; API-660; TEMA "R"

PROJECT NAME: WORLD ENERGY RENEWABLES PROJECT
EQUIPMENT OWNER: AIR PRODUCTS MANUFACTURING LLC
SERVICE: PRODUCT FRACTIONATOR OVERHEAD TRIM CONDENSER
LOCATION: WORLD ENERGY, PARAMOUNT, CA. USA
PRODUCT: FRACTIONATOR OVERHEAD VAPOR
ITEM NO.: 18-X-359
AIR PRODUCTS P.O. NO.:4505600056 / A8KM-4-402-PO-1
AP PROJECT NO: EN-20-7119
VDR CODE NO.: HC09
SERIAL NO.: S21-13258-4
ENGINEER: GH
CUSTOMER / CLIENT: WORLD ENERGY PARAMOUNT

NO.	DATE	REVISIONS
3	1/25/23	REV. PER FABSCO EMG
2	8/22/22	REV. PER CUST. B.W./DD
1	7/7/22	REV. PER CUST. & FABSCO GD/DD

LIFT LUG DETAIL w/ NAME PLATE & BRACKET

DWN. BY B.W.

DATE 5/3/22

CKD. BY *DiCarlo*

Fabsco SHELL & TUBE, LLC

DWG. NO. S21-13258-4-10 1

REV. 3

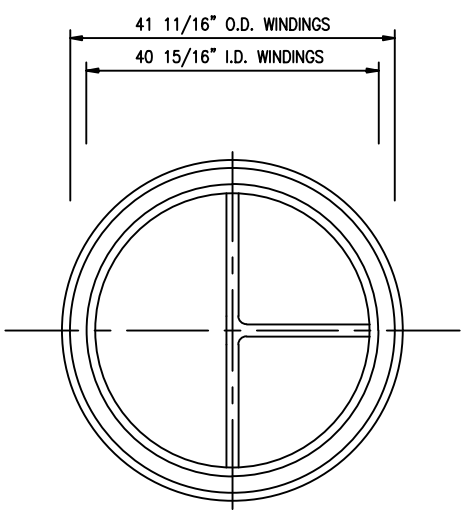

(1)–REQUIRED.
CHANNEL COVER GASKET.
0.175" THK. 316 S.S. SPIRAL WOUND
W/ GRAPHITE FILLER & INNER / OUTER COMP. RINGS (A)
1 RIB TO BE 3/16" THK. X 7/16" WIDE 316 S.S. DBL.
JACKETED W/ GRAPHITE FILLER AND 1/64" THK. GRAPHITE FACE ON BOTH SIDES
TEST PRESSURE:
SHOP: 172/FIELD: 167
1

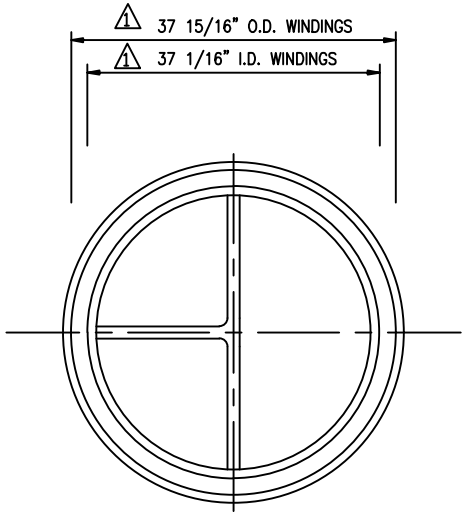

(1)–REQUIRED.
CHANNEL GASKET.
0.175" THK. 316 S.S. SPIRAL WOUND
W/ GRAPHITE FILLER & INNER / OUTER COMP. RINGS (B)
1 RIB TO BE 3/16" THK. X 7/16" WIDE 316 S.S. DBL.
JACKETED W/ GRAPHITE FILLER AND 1/64" THK. GRAPHITE FACE ON BOTH SIDES
TEST PRESSURE:
SHOP: 172/FIELD: 167
1

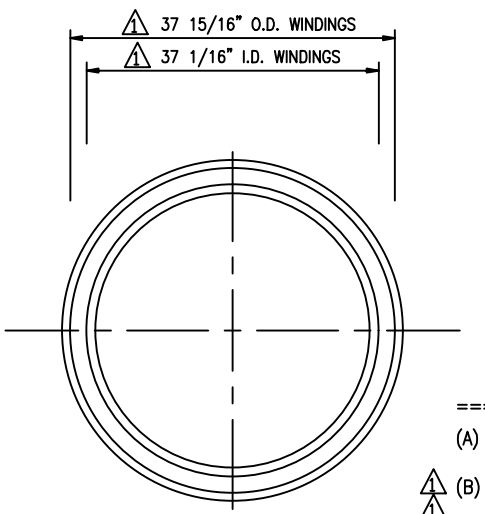

(1)–REQUIRED.
SHELL GASKET.
0.175" THK. 316 S.S. SPIRAL WOUND
W/ GRAPHITE FILLER & INNER / OUTER COMP. RINGS (C)
TEST PRESSURE:
SHOP: 188/FIELD: 167
1

===== COMPRESSION RINGS =====

(A) 42.4375 O.D. X .1250 THICK: MATERIAL=SA-240-304
40.1875 I.D. X .1250 THICK: MATERIAL=SA-240-304
1 (B) 38.6875 O.D. X .1250 THICK: MATERIAL=SA-240-304
1 36.3125 I.D. X .1250 THICK: MATERIAL=SA-240-304
1 (C) 38.6875 O.D. X .1250 THICK: MATERIAL=SA-240-304
1 36.3125 I.D. X .1250 THICK: MATERIAL=SA-240-304

NOTES:

1) QUANTITIES SHOWN FOR ONE SET
(3)–SET REQUIRED TOTAL.
ONE SET OF GASKETS TO BE USED IN EXCH. AND
1 (2) SETS (SPARES) TO BE BOXED, MARKED WITH P.O. & ITEM NO. & SHIPPED WITH EXCHANGER.

2) ALL RADII TO BE 1/4"

CHANNEL COVER TO CHANNEL FLANGE BOLTING INFO
STUD DIAMETER: 7/8" O.D.
NUMBER STUDS: (56)
STUD MATERIAL: SA-193-B7 1
BOLT TORQUE RANGE TO BE ACHIEVED: 448-449 FT. LBS

CHAN. FLG./T'SHT./SHELL FLG. BOLTING INFO
STUD DIAMETER: 7/8" O.D.
NUMBER STUDS: (64)
STUD MATERIAL: SA-193-B7 1
BOLT TORQUE RANGE TO BE ACHIEVED: 410-416 FT. LBS.

PROJECT NAME: WORLD ENERGY RENEWABLES PROJECT
EQUIPMENT OWNER: AIR PRODUCTS MANUFACTURING LLC
SERVICE: PRODUCT FRACTIONATOR OVERHEAD TRIM CONDENSER
LOCATION: WORLD ENERGY, PARAMOUNT, CA. USA
PRODUCT: FRACTIONATOR OVERHEAD VAPOR
ITEM NO.: 18-X-359
AIR PRODUCTS P.O. NO.:4505600056 / A8KM-4-402-PO-1
AP PROJECT NO: EN-20-7119
VDR CODE NO.: BE04
SERIAL NO.: S21-13258-4
ENGINEER: GH
CUSTOMER / CLIENT: WORLD ENERGY PARAMOUNT

NO.	DATE	REVISIONS
1	7/8/22	REV. PER CUST. GD/DD

GASKET DETAILS

DWN. BY B.W.
DATE 5/3/22
CKD. BY *DiCarlo*

Fabsco
SHELL & TUBE, LLC

DWG.NO. S21-13258-4-11
REV. 1

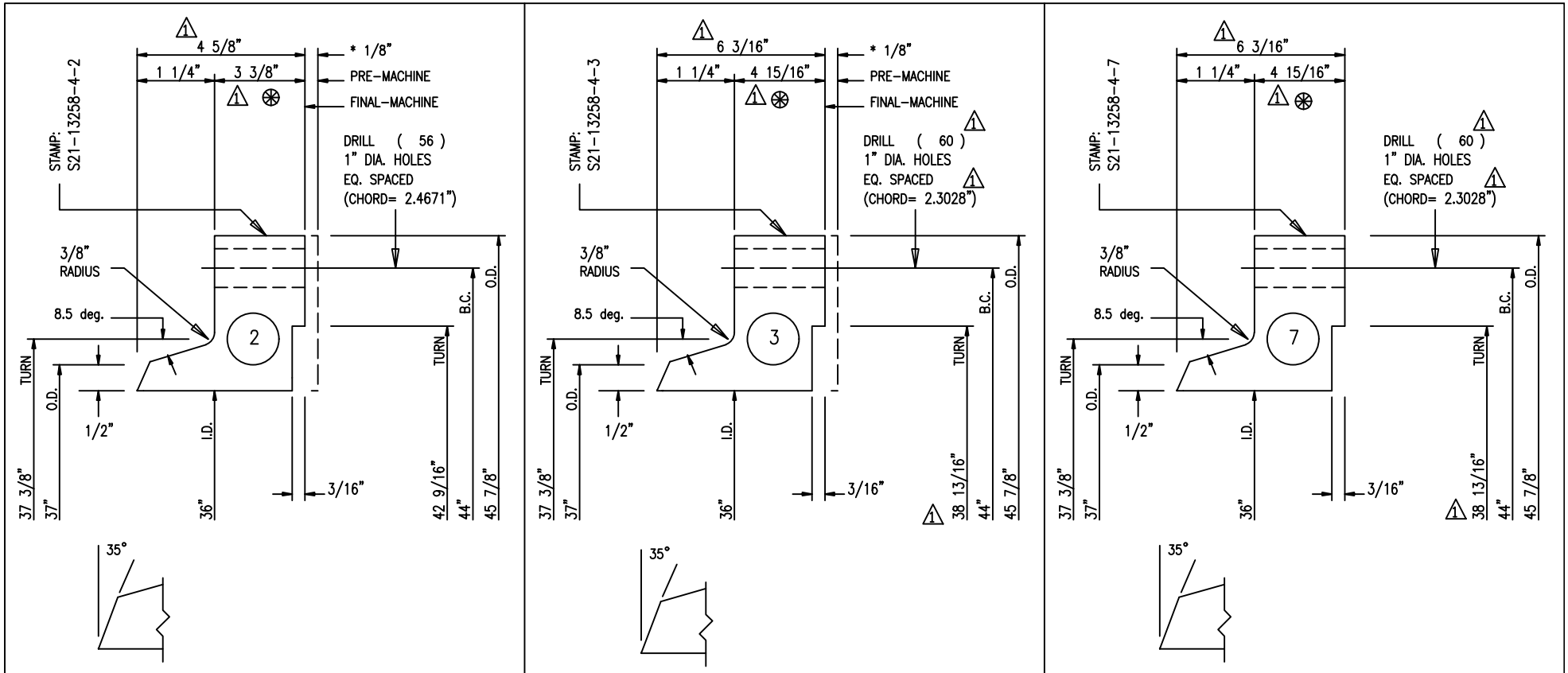

2 GIRTH FLANGE (ONE)REQ'D.

3 GIRTH FLANGE (ONE)REQ'D.

7 GIRTH FLANGE (ONE)REQ'D.

NOTES:
1) MACHINE ALL SURFACES TO 250 RMS EXCEPT GASKET SURFACES MACHINE TO 125 RMS.
2) ALL BOLT HOLES TO STRADDLE NATURAL CL.
3) * FINAL MACHINE FACING AFTER FINAL WELDING AND POST WELD HEAT TREATMENT.

⊛ THK. INCLUDES 1/8" FUTURE MACHINING ALLOWANCE

PROJECT NAME: WORLD ENERGY RENEWABLES PROJECT
EQUIPMENT OWNER: AIR PRODUCTS MANUFACTURING LLC
SERVICE: PRODUCT FRACTIONATOR OVERHEAD TRIM CONDENSER
LOCATION: WORLD ENERGY, PARAMOUNT, CA. USA
PRODUCT: FRACTIONATOR OVERHEAD VAPOR
ITEM NO.: 18-X-359
AIR PRODUCTS P.O. NO.: 4505600056 / A8KM-4-402-PO-1
AP PROJECT NO: EN-20-7119
VDR CODE NO.: BE04
SERIAL NO.: S21-13258-4
ENGINEER: GH
CUSTOMER / CLIENT: WORLD ENERGY PARAMOUNT

NO.	DATE	REVISIONS
1	7/8/2022	REV./FABSCO GO/DO

GIRTH FLANGES

DWN. BY B.W.
DATE 5/3/22
CKD. BY *DiCarlo*

Fabsco
SHELL & TUBE, LLC

DWG.NO. S21-13258-4-12
REV. 1

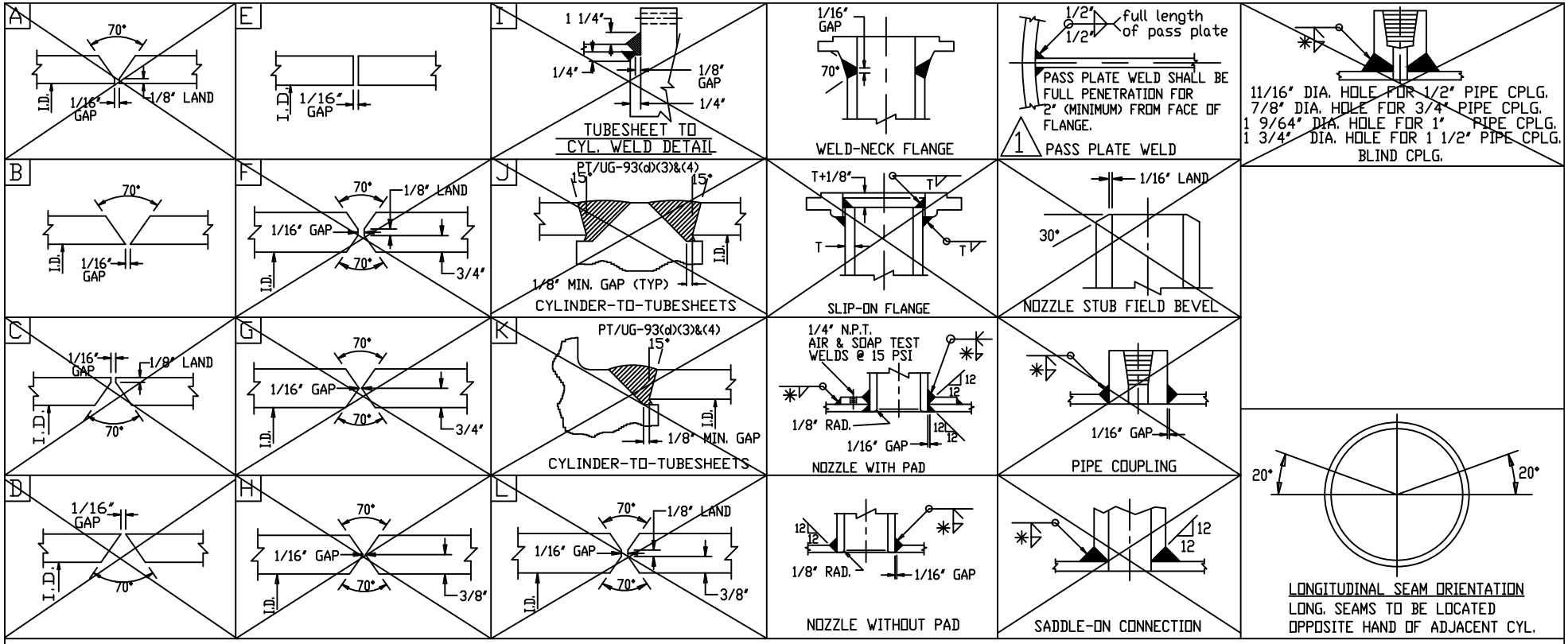

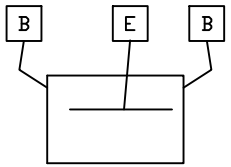

CHANNEL BEVELS

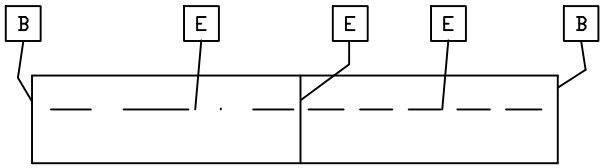

SHELL BEVELS



HEAD BEVELS

PROJECT NAME: WORLD ENERGY RENEWABLES PROJECT
EQUIPMENT OWNER: AIR PRODUCTS MANUFACTURING LLC
SERVICE: PRODUCT FRACTIONATOR OVERHEAD TRIM CONDENSER
LOCATION: WORLD ENERGY, PARAMOUNT, CA. USA
PRODUCT: FRACTIONATOR OVERHEAD VAPOR
ITEM NO.: 18-X-359
AIR PRODUCTS P.O. NO.: 4505600056 / A8KM-4-402-PO-1
AP PROJECT NO: EN-20-7119
VDR CODE NO.: BE04
SERIAL NO.: S21-13258-4
ENGINEER: GH
CUSTOMER / CLIENT: WORLD ENERGY PARAMOUNT

GENERAL NOTES:

1) ALL WELDING SHALL BE IN ACCORDANCE WITH ASME CODE (SECTION IX) AND PRODUCT SPECIFICATIONS A8KM-PP-000-500550-A, 4WEQ-1051, 3-11-10.

* 2) ALL FILLET WELDS SHALL BE 3/8", UNLESS NOTED OTHERWISE.

3) LIFTING LUGS SHALL HAVE A 3/8" CONTINUOUS FILLET WELD, UNLESS NOTED OTHERWISE.

4) NOZZLE PADS SHALL BE UT OR RT 100% IF SPLIT IS WITHIN 45° OF VESSEL LONGITUDINAL AXIS.

NO.	DATE	REVISIONS
1	7/8/22	REV. PER CUST. & FABSCO GD/DD

WELD & BEVEL DETAILS

DWN. BY B.W.
DATE 4/29/22
CKD. BY *DiCarlo*

Fabsco
SHELL & TUBE, LLC

DWG.NO. S21-13258-4-13 1
REV. 1

MK.NO.	QUAN.	DESCRIPTION	MATERIAL	NOZ MK.	SUPPLIER	P.O. NO.	DUE
21 △	406	TUBES 3/4" O.D.X 0.0830" (MIN) THK PER BEND SCHEDULE 12)	SA-179				
△							
△							
△		FORGED RING MATERIAL					
2 △1	1	FLG 45 7/8" O.D.X 36" I.D.X 4 5/8" THK (f) 6)8)12)	SA-350LF2CL1				
3 △1	1	FLG 45 7/8" O.D.X 36" I.D.X 6 3/16" THK (f) 6)8)12)	SA-350LF2CL1				
7 △1	1	FLG 45 7/8" O.D.X 36" I.D.X 6 3/16" THK (f) 6)8)12)	SA-350LF2CL1				
△							
△							
△		TUBESHEETS & COVERS					
19 △1	1	TUBESHEET 38 11/16" O.D.X 2 9/16" THK (f) 8)12)13)	SA-516-70N				
1 △	1	COVER 45 7/8" O.D.X 3 1/4" THK (f) 8)12)13)	SA-516-70N				
△							
△							
△		BAFFLES					
22 △	12	BAFFLES PER DWG. -8	SA-36				
22A △	1	SUPT PL. PER DWG. -8	SA-36				
△							
△							
△		HEAD					
18 △	1	ELLIP HD. 36" I.D.X 7/16" THK(min) W/2" SF 8)12)	SA-516-70N				
△							
△							
△		CYLINDERS					
9 △	1	R&W CYL 36" I.D.X 1/2" THK X 17'-11 11/16" LG.					
△		1-CYL 10'-0" 1-CYL 7'-11 11/16" 8)12)	SA-516-70				
4 △	1	R&W CYL 36" I.D.X 1/2" THK X 2'-2 7/16" LG. 8)12)	SA-516-70				
△							
△							
△							
△							
150 △2	1	1 1/2" X 18 GA. EXP'D METAL PERSONAL PROTECTION MESH					
△2		PER DWG. -3A	SA-240-316				
151 △2	95	PERSONAL PROTECTION STAND-OFF CLIPS PER DWG. -3A	SA-36				
152 △2	190	#8 SELF TAPPING SCREW W/ FLAT S.S. WASHER PER DWG. -3A	SA-240-316				
△2		SEE -17 FOR BILL OF MATERIAL NOTES					
△							
△3		NITROGEN PURGE MAT'L.					
108 △3	2	1/4" NPT GAGE W/ -30 TO 30 PSI (MINIMUM) DIAL	C.-STL.				
109 △3	2	1/4" X 1" NPT BUSHING	C.-STL.				
110 △3	2	1" - 3000 # SCREWED TEE	SA-234-WPB				
111 △3	4	1" NPT PIPE NIPPLE 0.179" (SCH. 80) X 2" LG. (TOE)	SA-106-B				
112 △3	4	1" NPT PIPE NIPPLE 0.179" (SCH. 80) X 1 1/2" LG. (TBE)	SA-106-B				
113 △3	4	1" - 50 # (MAX.) THD. BALL VALVE	C-STL.				
114 △3	4	1" - 3000 # HEX HEAD PLUG	C-STL.				
115 △3	2	1" 3M FS THRD 90 ELL	SA-105				
△							
△		SEE -17 FOR BILL OF MATERIAL NOTES					
△							
△							

PROJECT NAME: WORLD ENERGY RENEWABLES PROJECT
EQUIPMENT OWNER: AIR PRODUCTS MANUFACTURING LLC
SERVICE: PRODUCT FRACTIONATOR OVERHEAD TRIM CONDENSER
LOCATION: WORLD ENERGY, PARAMOUNT, CA. USA
PRODUCT: FRACTIONATOR OVERHEAD VAPOR
ITEM NO.: 18-X-359
AIR PRODUCTS P.O. NO.: 4505600056 / A8KM-4-402-PO-1
AP PROJECT NO: EN-20-7119
VDR CODE NO.: FA01
SERIAL NO.: S21-13258-4
ENGINEER: GH
CUSTOMER / CLIENT: WORLD ENERGY PARAMOUNT

NO.	DATE	REVISIONS
△3	1/26/23	ADD N2 PURGE/FABSCO EMG
△2	9/29/22	MOVED LINES/FABSCO BW/DD
△1	7/8/22	REV. PER FABSCO GO/DD

BILL OF MATERIAL

DWN. BY B.W.
DATE 5/3/22
CKD. BY *DiCarlo*

Fabsco
SHELL & TUBE, LLC

DWG.NO. S21-13258-4-14
REV. 3

MK.NO.	QUAN.	DESCRIPTION	MATERIAL	NOZ MK.	SUPPLIER	P.O. NO.	DUE
△		ANSI FLANGES					
71 △	1	ASME 12" – 300 # RF WN W/ (SchXH BORE) 5)9)12)	SA-350LF2CL1	S1			
72 △	1	ASME 10" – 300 # RF WN W/ (SchXH BORE) 5)9)12)	SA-350LF2CL1	S2			
81 △	1	ASME 8" – 300 # RF WN W/ (SchXH BORE) 5)9)12)	SA-350LF2CL1	T1			
82 △	1	ASME 8" – 300 # RF WN W/ (SchXH BORE) 5)9)12)	SA-350LF2CL1	T2			
73 △	1	ASME 2" – 300 # RF LWN X 9" LG(2.000"BORE) 5)9)12)	SA-350LF2CL1	A3			
74 △	1	ASME 2" – 300 # RF LWN X 9" LG(2.000"BORE) 5)9)12)	SA-350LF2CL1	A4			
83 △	1	ASME 2" – 300 # RF LWN X 9 1/2" LG(2.000"BORE) 5)9)12)	SA-350LF2CL1	V			
84 △	1	ASME 2" – 300 # RF LWN X 9 1/2" LG(2.000"BORE) 5)9)12)	SA-350LF2CL1	D			
85 △	1	ASME 2" – 300 # RF LWN X 9" LG(2.000"BORE) 5)9)12)	SA-350LF2CL1	A1			
86 △	1	ASME 2" – 300 # RF LWN X 9" LG(2.000"BORE) 5)9)12)	SA-350LF2CL1	A2			
73C △	1	ASME 2" – 300 # RF BLIND FLG. 5)9)12)	SA-350LF2CL1	A3			
74C △	1	ASME 2" – 300 # RF BLIND FLG. 5)9)12)	SA-350LF2CL1	A4			
83C △	1	ASME 2" – 300 # RF BLIND FLG. 5)9)12)	SA-350LF2CL1	V			
84C △	1	ASME 2" – 300 # RF BLIND FLG. 5)9)12)	SA-350LF2CL1	D			
85C △	1	ASME 2" – 300 # RF BLIND FLG. 5)9)12)	SA-350LF2CL1	A1			
86C △	1	ASME 2" – 300 # RF BLIND FLG. 5)9)12)	SA-350LF2CL1	A2			
71A △	1	SMLS.PIPE 12" X(0.5000" SchXH)X 9 1/2" LG. 8)12)	SA-106-B	S1			
72A △	1	SMLS.PIPE 10" X(0.5000" SchXH)X 9 3/4" LG. 8)12)	SA-106-B	S2			
81A △	1	SMLS.PIPE 8" X(0.5000" SchXH)X 11 3/4" LG. 8)12)	SA-106-B	T1			
82A △	1	SMLS.PIPE 8" X(0.5000" SchXH)X 11 3/4" LG. 8)12)	SA-106-B	T2			
71B △	1	WELD PAD 17 1/4" OD X 16 3/4" OD X 13 3/4" ID X		S1			
△		13 1/4" ID X 1/2" THK. ROLL TO 18 1/2" IR 8)12)	SA-516-70				
72B △	1	WELD PAD 15 1/16" OD X 14 3/4" OD X 11 9/16" ID X		S2			
△		11 1/4" ID X 1/2" THK. ROLL TO 18 1/2" IR 8)12)	SA-516-70				
81B △	1	WELD PAD 13 1/4" OD X 12 5/8" OD X 9 3/4" ID X		T1			
△		9 1/8" ID X 1/2" THK. ROLL TO 18 1/2" IR 8)12)	SA-516-70				
82B △	1	WELD PAD 13 1/4" OD X 12 5/8" OD X 9 3/4" ID X		T2			
△		9 1/8" ID X 1/2" THK. ROLL TO 18 1/2" IR 8)12)	SA-516-70				
△		NOZZLE COVER MATERIAL					
180 △2	2	PL. 15" O.D. X 3/8" THK. W/(12) 9/16" DIA. HOLES	C.-STL.				
△2		EQUALLY SPACED ON 13" B.C. (8"-300#)					
181 △2	2	GASKETS: 0.175" THK 316 SS SPIRAL WOUND GRAPHITE					
△		FILLED, STYLE "CGI" W/316 SS INNER RING &					
△		C-STL. OUTER RING FOR (8"-300# RF)					
182 △2	24	1/2" HEX HD. ALL-THD. BOLTS X 3 1/2" LG. W/(1) HEX NUT	C.-STL.				
△2		AND (2) FLAT WASHERS EACH (8"-300#)					
183 △3	1	PL. 20 1/2" O.D. X 3/8" THK. W/(16) 9/16" DIA. HOLES	C.-STL.				
△2		EQUALLY SPACED ON 17 3/4" B.C (12"-300#)					
184 △3	1	GASKETS: 0.175" THK 316 SS SPIRAL WOUND GRAPHITE					
△		FILLED, STYLE "CGI" W/316 SS INNER RING &					
△		C-STL. OUTER RING FOR (12"-300# RF)					
185 △3	16	1/2" HEX HD. ALL-THD. BOLT X 4" LG. W/(1) HEX NUT	C.-STL.				
△2		AND (2) FLAT WASHERS EACH (12"-300#)					
186 △3	1	PL. 17 1/2" O.D. X 3/8" THK. W/(16) 9/16" DIA. HOLES	C.-STL.				
△3		EQUALLY SPACED ON 15 1/4" B.C (10"-300#)					
187 △3	1	GASKET: 0.175" THK 316 SS SPIRAL WOUND GRAPHITE FILLED, STYLE					
△3		"CGI" W/316 SS INNER RING & C-STL OUTER RING FOR(10"-300#RF)					
188 △3	16	1/2" HEX HD. ALL-THD. BOLT X 4" LG. W/(1) HEX NUT	C.-STL.				
△3		AND (2) FLAT WASHERS EACH (10"-300#)					
71D △4	1	WELD PAD RING 19" OD X 18 1/2" OD X 17 3/4" ID X		S1			
△4		17 1/4" ID X 1/2" THK. ROLL TO 18 1/2" IR 8)12)	SA-516-70				

PROJECT NAME: WORLD ENERGY RENEWABLES PROJECT
EQUIPMENT OWNER: AIR PRODUCTS MANUFACTURING LLC
SERVICE: PRODUCT FRACTIONATOR OVERHEAD TRIM CONDENSER
LOCATION: WORLD ENERGY, PARAMOUNT, CA. USA
PRODUCT: FRACTIONATOR OVERHEAD VAPOR
ITEM NO.: 18-X-359
AIR PRODUCTS P.O. NO.: 4505600056 / A8KM-4-402-PO-1
AP PROJECT NO: EN-20-7119
VDR CODE NO.: FA01
SERIAL NO.: S21-13258-4
ENGINEER: GH
CUSTOMER / CLIENT: WORLD ENERGY PARAMOUNT

NO.	DATE	REVISIONS
4	1/26/23	REV. PER CUST. EMG
3	9/29/22	REV. PER CUST. B.W./DD
2	8/22/22	REV. .PER CUST. B.W./DD
1	7/8/22	REV. PER CUST. GD/DD

BILL OF MATERIAL

DWN. BY B.W.
DATE 5/3/22
CKD. BY *DiCarlo*

Fabsco
SHELL & TUBE, LLC

DWG.NO. S21-13258-4-15
REV. 4

MK.NO.	QUAN.	DESCRIPTION	MATERIAL	NOZ MK.	SUPPLIER	P.O. NO.	DUE
△		BOLTING & GASKETS					
40 △	1	LOT OF GASKETS PER DWG. −11					
41 △1	56	7/8" ROUND X 9−THREAD STUDS X 11 1/4" LG. 1&2 12)	SA−193B7				
42 △1	60	7/8" ROUND X 9−THREAD STUDS X 16 7/8" LG. 3&7 12)	SA−193B7				
43 △1	464	7/8" HEAVY HEX NUTS 9−THREAD 12)	SA−194−2H				
44 △1	232	7/8" NARROW SERIES WASHERS	F−436−1				
△							
△		SPARE STUDS & NUTS (TO SHIP LOOSE W/EXCH.)					
141 △1	6	7/8" DIA. (9−THD.) STUDS X 11 1/4" LG. 1&2 12)	SA−193−B7				
142 △1	6	7/8" DIA. (9−THD.) STUDS X 16 7/8" LG. 3&7 12)	SA−193−B7				
143 △1	46	7/8" HVY HEX NUTS (9−THD.) 12)	SA−194−2H				
144 △1	23	7/8" NARROW SERIES WASHERS 12)	F−436−1				
△							
△		BLIND FLANGE MATERIAL					
171 △	48	STUDS: 5/8" DIA. (11−THD.) X 5 3/4" LG.(2"−300# RF) 12)	SA−193−B7				
172 △	192	NUTS: 5/8" (11−THD.) HVY. HEX (2"−300# RF) 12)	SA−194−2H				
173 △	6	GASKETS: 0.175" THK 316 SS SPIRAL WOUND GRAPHITE					
△		FILLED, STYLE "CGI" W/316 SS INNER RING &					
△		C−STL. OUTER RING FOR (2"−300# RF)					
174 △1	96	5/8" NARROW SERIES WASHERS	F−436−1				
△							
△		MISC. MATERIAL					
60 △1	1	STD. NAME PLATE	304 STN STL				
61 △1	1	NAME PL BRKT PER DWG. −10 8)12)	SA−516−70				
62 △1	4	LIFTING LUGS PER DWG. −10 8)12)	SA−516−70				
23 △	135	FT. 1/2" O.D. TIE RODS	SA−36				
23B △	16	1/2" TIE ROD HEX NUTS	SA−563A				
23A △	135	FT. 3/4" O.D. SPACER TUBING	SA−214				
22S △	4	SEAL BARS 2 1/2" X 1/4" THK X 13'−2 5/8" LG.	SA−36				
22I △	17	IMP. RODS: 3/4" DIA. X 25 1/8" LG.	SA−36				
50 △	1	PASS PLATES 17 9/16" X 5/8" THK X 37 3/16" LG. 8)12)	SA−516−70				
51 △	1	PASS PLATES 35 7/8" X 5/8" THK X 37 3/16" LG. 8)12)	SA−516−70				
63 △1	4	SQUARE HEAD PULLBOLT PLUGS: 3/4" DIA. X 3 1/2" LG.	SA−36				
22R △	2	DUMMY RODS: 3/8" DIA. X 14'−8 5/8" LG.	SA−36				
65 △2	4	SHOULDER EYE BOLTS: 3/4" OD (10−THD.) W/ 2" LG					
△2		SHANK (TO SHIP LOOSE W/ EXCHANGER)	ASTM A489				
△		SUPPORT MATERIAL					
120 △1	2	PLATE 15" X 3/8" THK X 59" LG. 8)12)	SA−516−70				
121 △1	2	PLATE 32 5/8" X 1/2" THK X 24 1/4" LG.	SA−516−70				
122 △1	2	PLATE 9" X 3/4" THK X 31" LG.	SA−516−70				
123 △1	4	PLATE 4" X 3/4" THK X 14 7/8" LG.	SA−516−70				
124 △1	8	PLATE 4" X 3/4" THK X 21 5/8" LG.	SA−516−70				
125 △	2	GROUNDING LUGS: 2" X 1/4" THK. X 5" LG.	SA−240−304				
△							
△							
△		FOR BILL OF MATERIAL NOTES, SEE DWG. −17					
△2		"DELETED"					
△2		"DELETED"					
△1		PAINT PER DWG. −1A					
△							

PROJECT NAME: WORLD ENERGY RENEWABLES PROJECT
EQUIPMENT OWNER: AIR PRODUCTS MANUFACTURING LLC
SERVICE: PRODUCT FRACTIONATOR OVERHEAD
TRIM CONDENSER
LOCATION: WORLD ENERGY, PARAMOUNT, CA. USA
PRODUCT: FRACTIONATOR OVERHEAD VAPOR
ITEM NO.: 18−X−359
AIR PRODUCTS P.O. NO.: 4505600056 / A8KM−4−402−PO−1
AP PROJECT NO: EN−20−7119
VDR CODE NO.: FA01
SERIAL NO.: S21−13258−4
ENGINEER: GH
CUSTOMER / CLIENT: WORLD ENERGY PARAMOUNT

NO.	DATE	REVISIONS
△2	8/22/22	REV. PER CUST. B.W./DD
△1	7/8/22	REV. PER CUST. GD/DD

BILL OF MATERIAL

DWN. BY B.W.
DATE 5/3/22
CKD. BY *DiCarlo*

Fabsco
SHELL & TUBE, LLC

DWG.NO. S21−13258−4−16
REV. 2

MK.NO.	QUAN.	DESCRIPTION	MATERIAL	NOZ MK.	SUPPLIER	P.O. NO.	DUE
△		NOTES:					
△		1) ALL WELD BEVELS PER WELD & BEVEL DETAIL DWG ATTACHED					
△		2) ALL FORMED HEADS TO BE IN ACCORDANCE WITH UCS-79.					
△		3) ALL COLD FORMED PRESSURE PARTS, INCLUDING BUT NOT					
△		LIMITED TO CYLINDER & HEADS, TO BE CERTIFIED AS					
△		REQ'D. BY ASME SECTION VIII, DIV. 1, para. UG-79(c).					
△		4) C.M.T.R'S. REQ'D. FOR ALL MATERIAL. ACCEPTABLE					
△		COUNTRY'S OF ORIGIN ARE AUSTRIA, BELGIUM, CANADA,					
△		CZECH REPUBLIC, DENMARK, FINLAND, FRANCE, GERMANY,					
△		IRELAND, ITALY, JAPAN, LUXEMBOURG, THE NEATHERLANDS,					
△		NORWAY, MEXICO, POLAND, SPAIN, SOUTH KOREA,					
△		SOUTH AFRICA, SWEDEN, SWITZERLAND, TAIWAN, UNITED					
△1		KINGDOM, UNITED STATES OF AMERICA (TUBES)					
△		5) NOZ. FLG'S TO HAVE 125-250 MICROINCH RA FINISH.					
△		6) FLANGE'S TO BE AS FOLLOWS:					
△		A) BODY FLG. FORGINGS TO BE U.T. PER SA-388 &					
△		ASME CODE SECT VIII DIV. 2, PARA 3.3.4.					
△		B) THE ENTIRE SURFACE OF FORGING, AFTER FINISH					
△		MACHINING, SHALL BE M.P.E OR D.P.E.					
△		7) ANY REQUIRED TEST SPECIMENS FOR MECHANICAL TESTING					
△		SHALL BE TAKEN FROM THE SAME HEAT LOT AT 1/2T.					
△		8) CARBON EQUIVALENT (CE) SHALL BE CALCULATED USING THE					
△		FOLLOWING FORMULA, UNLESS CODE REQUIREMENTS ARE MORE					
△		CONSERVATIVE: C.E. SHALL NOT EXCEED .42					
△		CE=C+(Mn)/6+(Cr+Mo+V)/5+(Ni+Cu)/15					
△		9) FLG. FACINGS SHALL BE PROTECTED DURING FABRICATION & SHIPPING.					
△		10) TEMPERING TEMPERATURE SHALL NOT BE LESS THAN 1200°F.					
△		11) ALL NORMALIZED MATERIAL TO BE FINE GRAIN PRACTICE.					
△		12) ALL CARBON STEEL FORGINGS, PLATE, PIPE,					
△		BOLTING, SHALL BE KILLED EXCEPT FOR BAFFLES AND					
△		"MISC. MATERIAL" HEADING.					
△		13) PLATE TO BE 100% U.T. BEFORE FORMING					
△		PER SA-435, SUPPL. REQT. S1.					
△							
△							
△							
△							
△							
△							
△							
△							
△							
△							
△							
△							
△							
△							
△							
△							
△							
△							
△							

PROJECT NAME: WORLD ENERGY RENEWABLES PROJECT
EQUIPMENT OWNER: AIR PRODUCTS MANUFACTURING LLC
SERVICE: PRODUCT FRACTIONATOR OVERHEAD TRIM CONDENSER
LOCATION: WORLD ENERGY, PARAMOUNT, CA. USA
PRODUCT: FRACTIONATOR OVERHEAD VAPOR
ITEM NO.: 18-X-359
AIR PRODUCTS P.O. NO.: 4505600056 / A8KM-4-402-PO-1
AP PROJECT NO: EN-20-7119
VDR CODE NO.: FA01
SERIAL NO.: S21-13258-4
ENGINEER: GH
CUSTOMER / CLIENT: WORLD ENERGY PARAMOUNT

NO.	DATE	REVISIONS
1	7/8/22	REV. PER CUST. GD/DD

BILL OF MATERIAL NOTES

DWN. BY B.W.
DATE 5/6/22
CKD. BY

Fabsco
SHELL & TUBE, LLC

DWG.NO. S21-13258-4-17
REV. 1

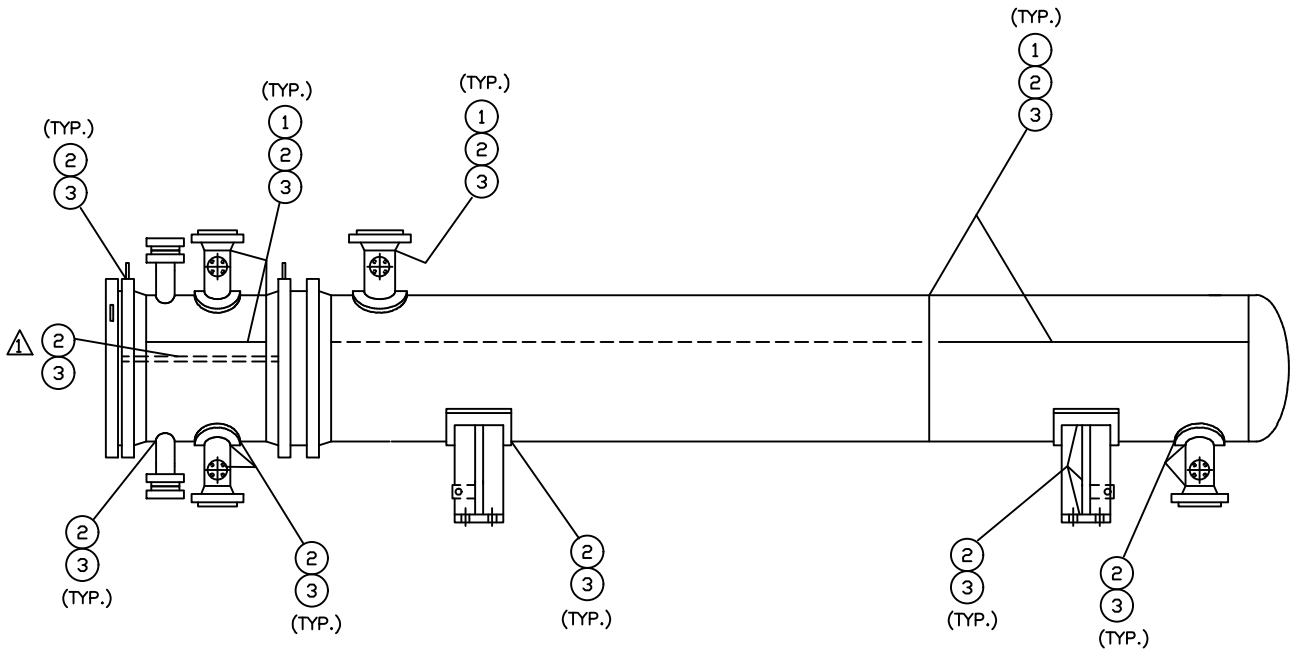

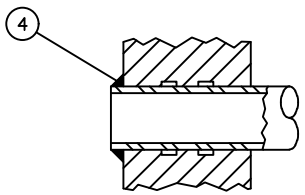

TUBE–TO–
TUBESHEET SEAL WELD

MK.	PROC. #
1	A–344
2	F–148
3	M–189
4	T–234

PROJECT NAME: WORLD ENERGY RENEWABLES PROJECT
EQUIPMENT OWNER: AIR PRODUCTS MANUFACTURING LLC
SERVICE: PRODUCT FRACTIONATOR OVERHEAD TRIM CONDENSER
LOCATION: WORLD ENERGY, PARAMOUNT, CA. USA
PRODUCT: FRACTIONATOR OVERHEAD VAPOR
ITEM NO.: 18–X–359
AIR PRODUCTS P.O. NO.:4505600056 / A8KM–4–402–PO–1
AP PROJECT NO: EN–20–7119
VDR CODE NO.: QD07
SERIAL NO.: S21–13258–4
ENGINEER: GH
CUSTOMER / CLIENT: WORLD ENERGY PARAMOUNT

NO.	DATE	REVISIONS
1	7/8/22	REV. PER CUST. GD/DD

WELD MAP

DWN. BY B.W.
DATE 4/27/22
CKD. BY MO

Fabsco
SHELL & TUBE, LLC

DWG. No. S22–13258–4–18
REV. 1

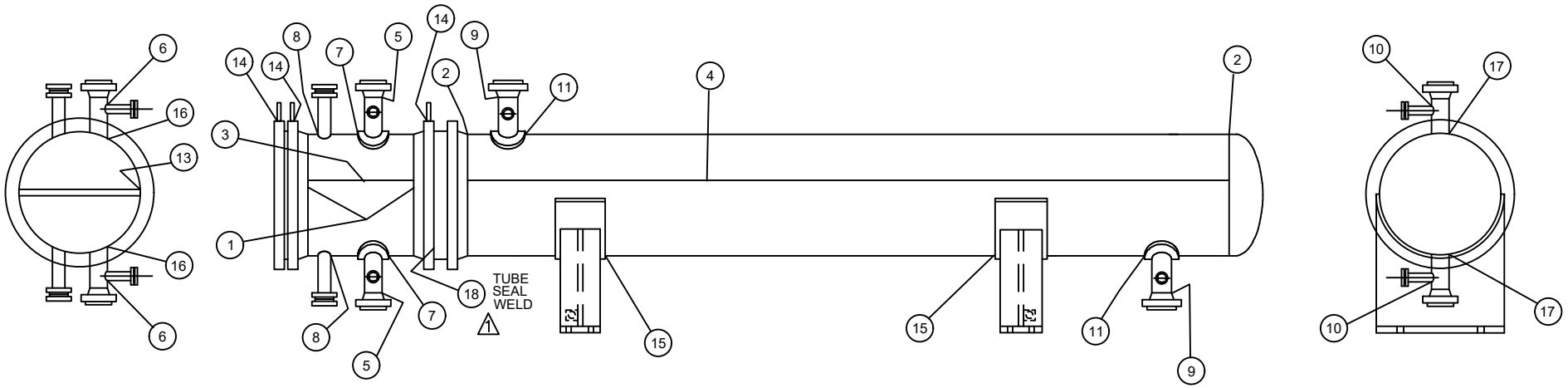

	X-RAY	U.T.	M.T.	P.T.	W.F.M.T.	BRINELL	MK.
CHANNEL CIRCULAR SEAM	X		X	X	X	X	1
SHELL CIRCULAR SEAM	X		X	X	X	X	2
CHANNEL LONG SEAM	X	X	X	X	X	X	3
SHELL LONG SEAM	X	X	X	X	X	X	4
CHANNEL NOZZLE FLANGE TO PIPE	X	X	X	X	X	X	5
CHANNEL AUX. TO PIPE		X	X	X	X	X	6
CHANNEL WELD PAD TO CYLINDER		X	X	X	X	X	7
CHANNEL V & D TO CYLINDER		X	X	X	X	X	8
SHELL NOZZLE FLANGE TO PIPE	X	X	X	X	X	X	9
SHELL AUX. TO PIPE			X	X	X	X	10
SHELL WELD PAD TO CYLINDER		X	X	X	X	X	11
DELETED							
PASS PLATE TO CYLINDER		X	X	X	X	X	13
LIFT LUG WELDS			X	X			14
SUPPORT PAD TO CYLINDER			X	X	X	X	15
CHANNEL NOZZLE TO CYLINDER		X	X	X			16
SHELL NOZZLE TO CYLINDER		X	X	X			17
TEMPORARY ATTACHMENT LOCATIONS			X	X			
TUBE SEAL WELD				X			18

PROJECT NAME: WORLD ENERGY RENEWABLES PROJECT
EQUIPMENT OWNER: AIR PRODUCTS MANUFACTURING LLC
SERVICE: PRODUCT FRACTIONATOR OVERHEAD TRIM CONDENSER
LOCATION: WORLD ENERGY, PARAMOUNT, CA. USA
PRODUCT: FRACTIONATOR OVERHEAD VAPOR
ITEM NO.: 18-X-359
AIR PRODUCTS P.O. NO.:4505600056 / A8KM-4-402-PO-1
AP PROJECT NO: EN-20-7119
VDR CODE NO.: QD07
SERIAL NO.: S21-13258-4
ENGINEER: GH
CUSTOMER / CLIENT: WORLD ENERGY PARAMOUNT

NO.	DATE	REVISIONS
1	7/8/22	REV. PER FABSCO GD/DD

NDE MAP

DWN. BY: B.W.
DATE: 4/27/22
CKD. BY: MO

Fabsco
SHELL & TUBE, LLC

DWG. No.: S21-13258-4-19
REV.: 1

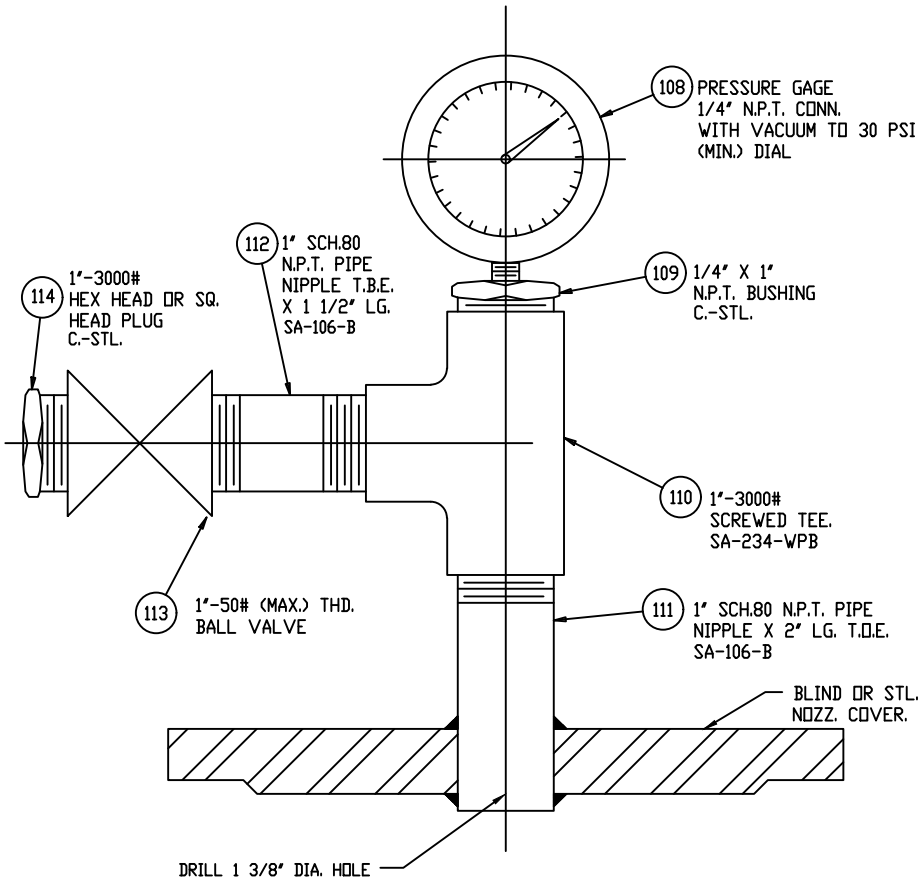

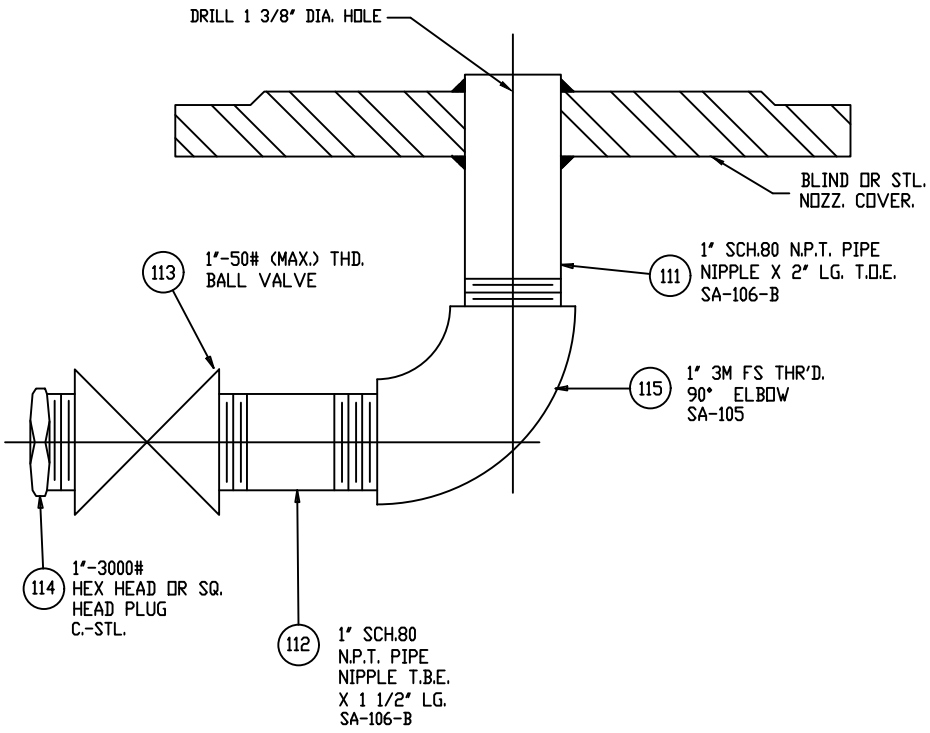

NOTES:
1) A VACUUM MUST BE CREATED INSIDE EXCHANGER WHICH IS TO BE BROKEN BY INTRODUCING 10 PSI DRY NITROGEN THROUGH VALVE.
2) POSITIVE PRESS. TO READ 10 PSI CONTINUOUS.
3) GAGE & VALVE TO REMAIN ON EXCHANGER AND BE PROTECTED AGAINST BREAKAGE DURING SHIPMENT.
4) STENCIL ON CAUTION TAG & WIRE TO NOZ. CVR., "WARNING, THIS EXCHANGER IS UNDER POSITIVE PRESSURE, RELIEVE PRESSURE BEFORE OPENING ANY CLOSURE."
5) ALL OPENINGS TO BE PLUGGED OR CAPPED BEFORE SHIPMENT.
6.) 2-GAGE REQUIRED. (1-SHELLSIDE & 1-TUBESIDE).

PROJECT NAME: WORLD ENERGY RENEWABLES PROJECT
EQUIPMENT OWNER: AIR PRODUCTS MANUFACTURING LLC
SERVICE: PROPANE RECOVERY COMPRESSOR AFTERCOOLER
LOCATION: WORLD ENERGY, PARAMOUNT, CA. USA
PRODUCT: PROPANE RECOVERY COMPRESSOR AFTERCOOLER
ITEM NO.: 18-X-359
AIR PRODUCTS P.O. NO.: 4505600056 / A8KM-4-402-PO-1
AP PROJECT NO: EN-20-7119
VDR CODE NO.: BE04
SERIAL NO.: S21-13258-4
ENGINEER: GH
CUSTOMER / CLIENT: WORLD ENERGY PARAMOUNT

NO.	DATE	REVISIONS
1	1/26/22	ADDED DETAIL/CUST. DD/DG

PRESSURE GAGE & VALVE DETAIL FOR NITROGEN PURGE

DWN. BY DD
DATE 1/26/22
CKD. BY DG

Fabsco
SHELL & TUBE, LLC

DWG.NO. S21-13258-4-20
REV. 1