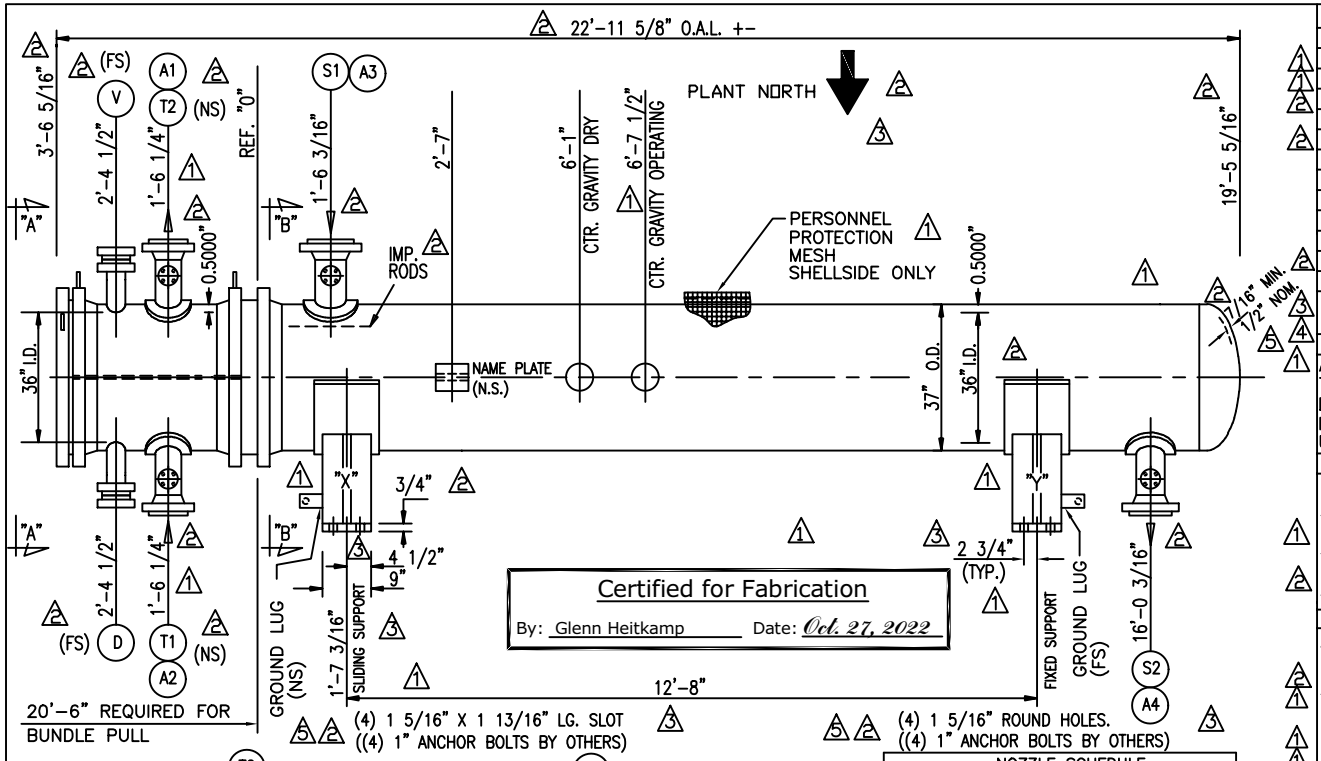

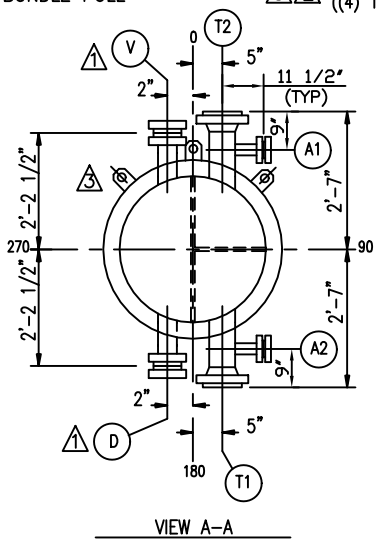

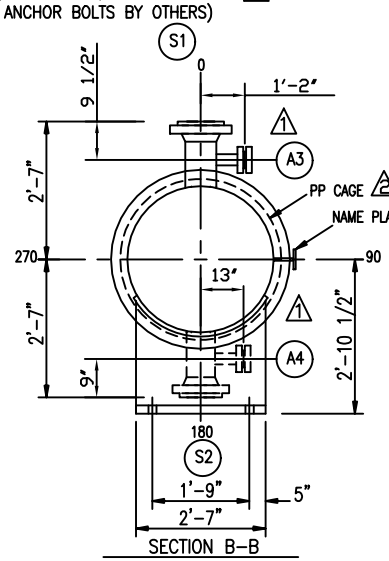

NOZZLE SCHEDULE			
MK	QT	DESCRIPTION	PROCESS
S1	1	12" 300#RF WN	INLET
S2	1	10" 300#RF WN	OUTLET
		DELETED	
		DELETED	
T1	1	8" 300#RF WN	INLET
T2	1	8" 300#RF WN	OUTLET
V	1	2" 300#RF LWN	VENT*
D	1	2" 300#RF LWN	DRAIN*
A1	1	2" 300#RF LWN	AUX.*
A2	1	2" 300#RF LWN	AUX.*
A3	1	2" 300#RF LWN	AUX.*
A4	1	2" 300#RF LWN	AUX.*

* INCLUDES BLIND, BOLTING & GASKETS

DESIGN DATA	SHELL	TUBE
DESIGN PRESSURE P.S.I.G.	125	120
M.A.W.P. P.S.I.G.	128	128
MAP P.S.I.G.	146	134
LIMITED BY	TUBESHEET	CHANNEL COVER
VACUUM PRESSURE P.S.I.G.	15 @ 300° F.	N/A
TEST PRESSURE P.S.I.G.	SHOP-188/FIELD-167	SHOP-172 /FIELD-167
DESIGN TEMP. Deg.F.	300	150
MDMT Deg. F.	32	32
CORROSION ALLOWANCE	1/8"	1/8"
NUMBER OF PASSES	1	4
RADIOGRAPHY	FULL	FULL
HEAT TREAT REQUIRED	NO	U-BENDS ONLY

ESTIMATED WEIGHTS, LBS.

DRY: 20200 BUNDLE: 10500 WET/HYDRO:29000 SHELL: 5500 CHAN CVR: 1420 CHAN: 2680
OPERATING : 27725

SPECIFICATIONS

ASME Code Section VIII, Division 1, 2021 Ed. (Stamp: Yes)
TEMA Class R 10th Ed; & National Board Reg. Req. API-660 9th Ed.
Design Reviewed For Compliance With The Requirements of UG-120(d).
Impact Test Exempt per UCS-66(a),(c),(g), Fig. UCS-66 Gen. Note (c) & UCS-67. UOP SPECS

MATERIAL

CHANNEL: SA-516-70
SHELL: SA-516-70
TUBESHEETS: SA-516-70N
BAFFLES: SA-36
TUBES: SA-179 (SEAMLESS)
SEE BOM FOR REMAINDER OF MATERIALS
(406) U'S 3/4" O.D.X 0.083" (MIN.) X 17'-0" LG.
TUBE PITCH 1" 90° SURFACE 2668.9 SQ.FT.

GENERAL NOTES

ALL BOLT HOLES TO STRADDLE NATURAL CENTER LINES.
STRESS RELIEVE U-BENDS PLUS 1'-0" OF STRAIGHT LENGTH
SHELLSIDE PERSONEL PROTECTION CAGE
TUBES TO TUBESHEET EXPANDED & SEAL WELDED
HARDENED WASHERS REQUIRED
10% SPARE BOLTING FOR BODY FLG'S.
FLAMMABLE SERVICE SHELL SIDE.
GASKETS: .175" THK. 316 S.S. SPIRAL WOUND W/ GRAPHITE FILLER AND 1/8" THK. INNER AND OUTER COMP. RINGS
2 SETS OF SPARE GASKETS REQUIRED.
PAINT: SEE DWG. -1A.

PROJECT NAME: WORLD ENERGY RENEWABLES PROJECT
EQUIPMENT OWNER: AIR PRODUCTS MANUFACTURING LLC
SERVICE: PRODUCT FRACTIONATOR OVERHEAD TRIM CONDENSER
LOCATION: WORLD ENERGY, PARAMOUNT, CA. USA
PRODUCT: FRACTIONATOR OVERHEAD VAPOR
ITEM NO.: 18-X-359
AIR PRODUCTS P.O. NO.: 4505600056 / A8KM-4-402-PO-1
AP PROJECT NO: EN-20-7119
VDR CODE NO.: HC09
SERIAL NO.: S21-13258-4
ENGINEER: GH
CUSTOMER / CLIENT: WORLD ENERGY PARAMOUNT

NO.	DATE	REVISIONS
5	1/26/23	REV. PER FABSCO DD/EMG
4	10/19/22	REV. PER CUST. DD/DG
3	8/22/22	REV. PER CUST. B.W./DD
2	7/7/22	REV. PER CUST. GO/DD
1	4/26/22	REV. PER CUST. B.W./DD

ASSEMBLY AND SPECIFICATIONS FOR
ONE 36-204 A E U

DWN. BY GH
DATE 1-25-2022
CKD. BY DiCarlo

Fabsco
SHELL & TUBE, LLC

DWG.NO. S21-13258-4-1
REV. 5

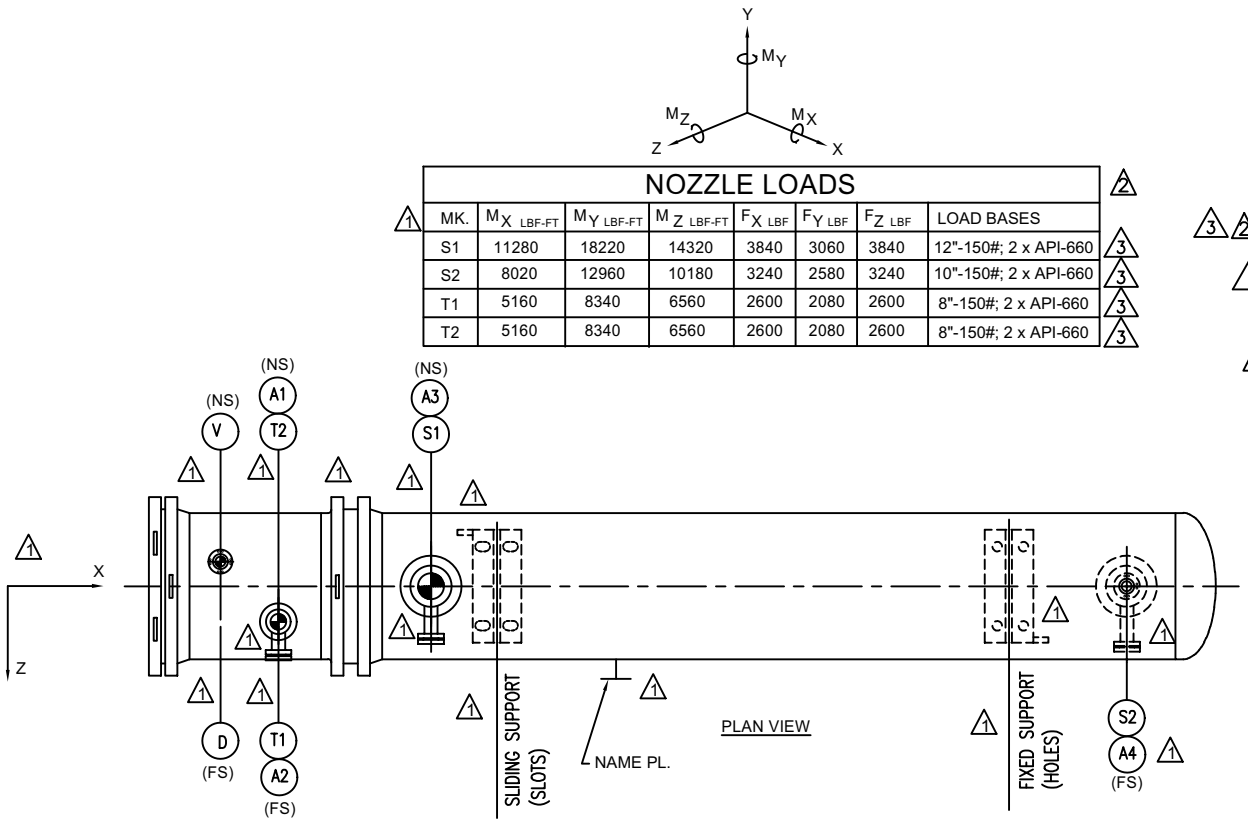

PLAN VIEW

NOZZLE LOADS

MK.	M_{X} LBF-FT	M_{Y} LBF-FT	M_{Z} LBF-FT	F_{X} LBF	F_{Y} LBF	F_{Z} LBF	LOAD BASES
S1	11280	18220	14320	3840	3060	3840	12"-150#; 2 x API-660
S2	8020	12960	10180	3240	2580	3240	10"-150#; 2 x API-660
T1	5160	8340	6560	2600	2080	2600	8"-150#; 2 x API-660
T2	5160	8340	6560	2600	2080	2600	8"-150#; 2 x API-660

FOUNDATION LOADS

SADDLE MARK	SUP'T "X"	SUP'T "Y"
TRANSVERSE SHEAR LOAD	7870.91 LBS.	7870.91 LBS.
LONGITUDINAL SHEAR LOAD	15741.83 LBS.	15741.83 LBS.
VERTICAL LOAD	42083.59 LBS.	42847.26 LBS.

DESIGN DATA	SHELL	TUBE
OPERATING PRESSURE PSIG	16	60
OPERATING TEMP. °F.	IN: 164.9 OUT: 105	IN: 80 OUT: 100
HYDROTEST TEMP. °F.	50 deg F (min)	50 deg F (min)
JOINT EFF.	1	1
FLUID NAME	PROD. FRAC. OVHD. VAP.	COOLING WATER
FLUID DENSITY lb/ft^3	IN: 38.99 OUT: 40.369	IN: 62.228 OUT: 62.006
LETHAL SERVICE	NO	NO
DESIGN DUTY Btu/hr	8466283	
WIND CODE	ASCE 7-16 WIND SPEED: 101 MPH IMP. FACTOR: 1	
SEISMIC CODE	ASCE 7-16 IMP. FACTOR: 1.5 Fa: 1 Fv: 1.5	
	Sds: 1.077 Site Class: D Sd_1: 0.996	

PAINT : PAINT SYSTEM 1 (SHELL & TUBE SIDE)

SOLVENT CLEAN PER SSPC-SP1
SANDBLAST PER SSPC-SP10 (1.5-2.5 MILS ANCHOR PROFILE)

PRIMER: ONE COAT SHERWIN WILLIAMS ZINC CLAD II (2.5-4.0 MILS DFT)

INTERM: ONE COAT SHERWIN WILLIAMS MACROPOXY 646 (4.0-6.0 MILS DFT)
(COLOR: MILLWHITE)

FINISH COAT: ONE COAT SHERWIN WILLIAMS ACROLON 218HS
(2.0-3.0 MILS DFT)
(COLOR: LIGHT GRAY RAL #7035)

APPLICABLE SPECIFICATIONS :

3-11-10, 4-11-11, 4WEQ-1051, 4WGN-10001,
4WPI-670210, A8KM-PP-000-40002-A,
A8KM-PP-000-50720-A, A8KM-PP-000-200001-A,
A8KM-PP-000-500005-A, A8KM-PP-000-500510-A,
A8KM-PP-000-500512-A, A8KM-PP-000-500520-A,
A8KM-PP-000-500550-A, FORM 8232,
SPEC-ENG-DOC001, SPEC-ENG-DOC002,
SPEC-ENG-MQ042, SPEC-ENG-MQ057,
SPEC-MED-DOC001

PROJECT NAME: WORLD ENERGY RENEWABLES PROJECT
EQUIPMENT OWNER: AIR PRODUCTS MANUFACTURING LLC
SERVICE: PRODUCT FRACTIONATOR OVERHEAD TRIM CONDENSER
LOCATION: WORLD ENERGY, PARAMOUNT, CA. USA
PRODUCT: FRACTIONATOR OVERHEAD VAPOR
ITEM NO.: 18-X-359
AIR PRODUCTS P.O. NO.: 4505600056 / A8KM-4-402-PO-1
AP PROJECT NO: EN-20-7119
VDR CODE NO.: HC09
SERIAL NO.: S21-13258-4
ENGINEER: GH
CUSTOMER / CLIENT: WORLD ENERGY PARAMOUNT

2 CHANNEL COVER TO CHANNEL FLANGE BOLTING INFO
STUD DIAMETER: 7/8" O.D.
NUMBER STUDS: (56)
STUD MATERIAL: SA-193-B7
BOLT TORQUE RANGE TO BE ACHIEVED: 448-449 FT. LBS

2 CHAN. FLG./T'SHT./SHELL FLG. BOLTING INFO
STUD DIAMETER: 7/8" O.D.
NUMBER STUDS: (64)
STUD MATERIAL: SA-193-B7
BOLT TORQUE RANGE TO BE ACHIEVED: 410-416 FT. LBS.

NO.	DATE	REVISIONS
4	1/26/23	REV. PER FABSCO DD/EMG
3	10/19/22	REV. PER CUST. DD/DG
2	8/22/22	REV. PER CUST. B.W./DD
1	7/7/22	REV. PER CUST. GD/DD

SUPPLEMENTAL INFORMATION
ONE 36-204 A E U

DWN. BY B.W.
DATE 4/26/22
CKD. BY *DiCarlo*

Fabsco
SHELL & TUBE, LLC

DWG.NO. S21-13258-4-1A
REV. 4