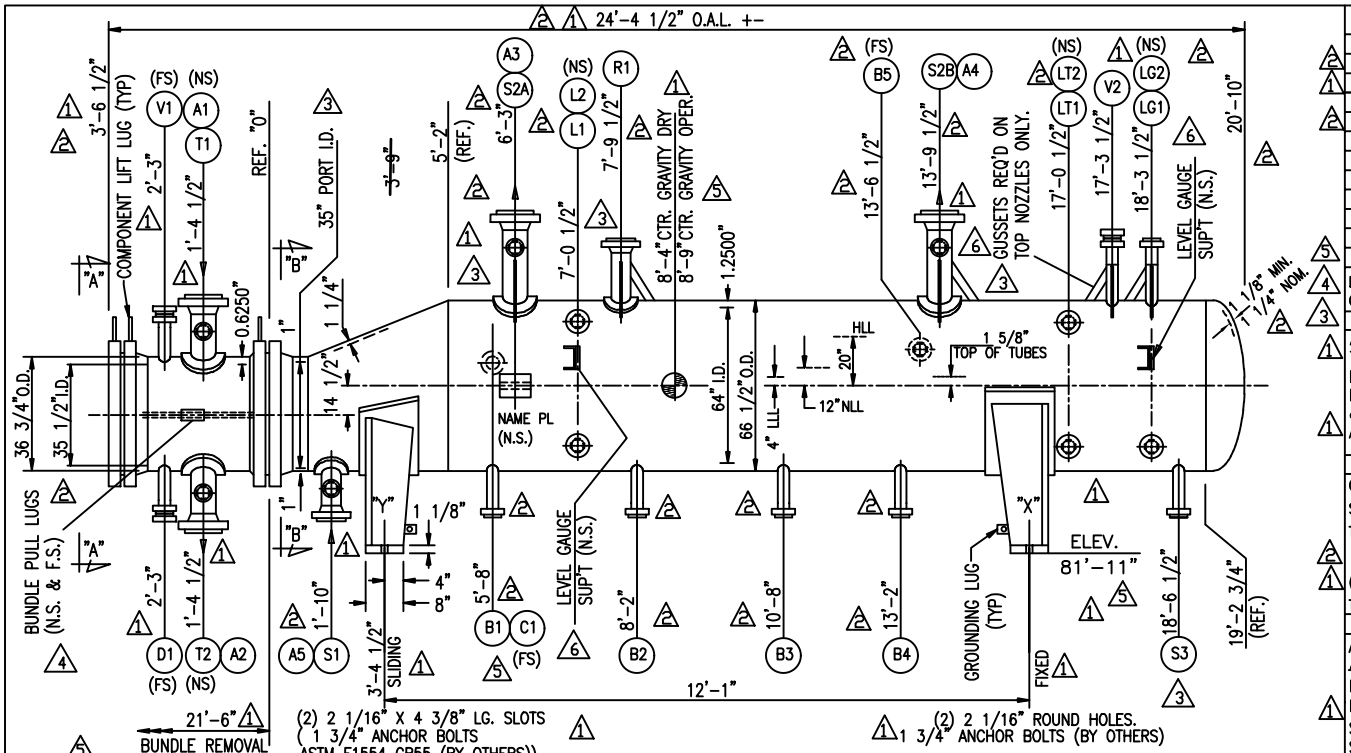

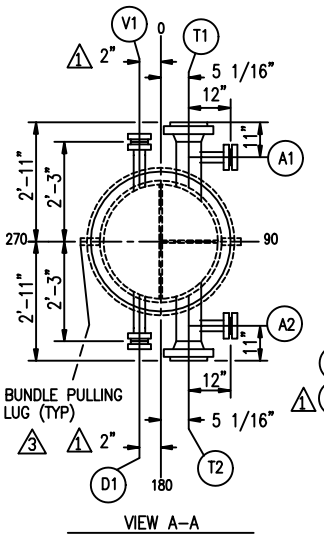

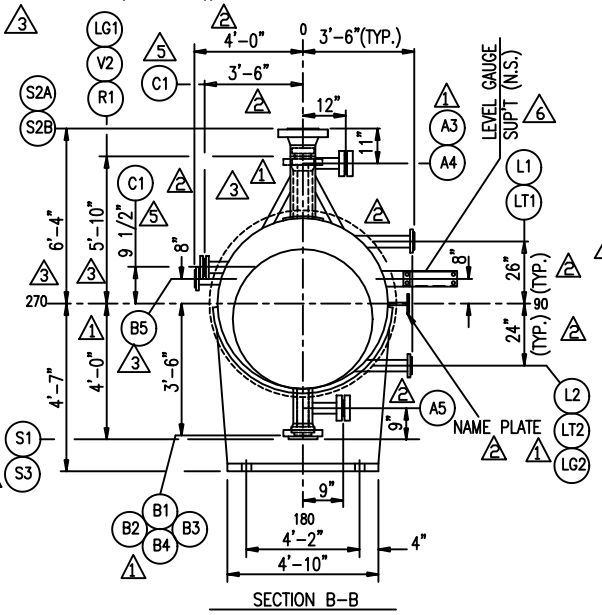

NOZZLE SCHEDULE			
MK	QT	DESCRIPTION	PROCESS
S1	1	4" 600#RF WN	INLET
S2A	1	8" 600#RF WN	OUTLET
S2B	1	8" 600#RF WN	OUTLET
B1-B4	4	2" 1500#RF LWN	INT.BLW.DN.
B5	1	2" 1500#RF LWN	C. BD.
C1	1	2" 600#RF LWN(*)	CH. INJ.
L1-L2	2	2" 1500#RF LWN	LEVEL BRIDLE
LT1-LT2	2	2" 1500#RF LWN	LEVEL TRANS.
LG1-LG2	2	2" 1500#RF LWN	LEVEL GUAGE
R1	1	6" 900#RF WN	RELIEF
S3	1	2" 600#RF LWN	DRAIN
T1	1	8" 600#RF WN	INLET
T2	1	8" 600#RF WN	OUTLET
V1	1	2" 300#RF LWN(*)	VENT
V2	1	2" 300#RF LWN(*)	VENT
D1	1	2" 300#RF LWN(*)	DRAIN
A1-A5	5	2" 300#RF LWN(*)	AUX.
(*) INCLUDES BLINDS, GASKETS & BOLTING			

DESIGN DATA	SHELL	TUBE
DESIGN PRESSURE P.S.I.G.	550	425
M.A.W.P P.S.I.G.	556 by TUBESHEET	436 by GIRTH FLANGE
M.A.P. P.S.I.G.	637 by TUBESHEET	533 by GIRTH FLANGE
VACUUM PRESSURE P.S.I.G.	FV at 550° F	FV at 610° F
TEST PRESSURE P.S.I.G.	SHOP-826/FIELD-733	SHOP-691/FIELD-594
DESIGN TEMP. Deg.F.	550	650
MDMT Deg. F.	32	32
CORROSION ALLOWANCE	1/8"	1/8"
NUMBER OF PASSES	KETTLE	4
RADIOGRAPHY	FULL	SPOT
HEAT TREAT REQUIRED	YES	U-BENDS ONLY

ESTIMATED WEIGHTS, LBS.

DRY:36900 WET/HYDRO:61800 BUNDLE:12350 SHELL:20700 F.CH.:1725 CH.COV: 1680
CHAN. & BUNDLE: 15755 OPERATING : 57200

SPECIFICATIONS

ASME Code Section VIII, Division 1, 2021 Ed. (Stamp: Yes)
TEMA Class R 10TH ED.; & National Board Registration is required.
Design Reviewed For Compliance With The Requirements of UG-120(d).
Impact Test Exempt per UCS-66(a), (d), (g), Fig. UCS-66 Gen. Note (c) & UCS-67.
API-660 9TH ED., UOP SPEC: 3-11-10, 4-11-11

MATERIAL

CHANNEL:	SA-516-70	BAFFLES:	SA-516-70
SHELL:	SA-516-70N	TUBES:	SA-179 (SMLS)
TUBESHEETS:	SA-350LF2CL1		

SEE REMAINDER OF MAT'L. ON BILL OF MATERIAL

(414) U's 3/4" O.D.X 0.083" MIN. X 18'-0" LG.
TUBE PITCH 1" -90° SURFACE 2959 EFF. SQ. FT.

GENERAL NOTES

ALL BOLT HOLES TO STRADDLE NATURAL CENTER LINES.
FLAMMABLE SERVICE - TUBE SIDE
INSULATION: 2 1/2" SHELL, 5" TUBE SIDE (BY OTHERS).
INSULATION RINGS BY FABSCO.
STRESS RELIEVE U-BENDS PLUS 1'-0" OF STRAIGHT LENTGH
STRENGTH WELD TUBES TO TUBESHEET
10% SPARE BOLTS FOR BODY FLG'S.
SUPPORTS TO BE FIRE PROOFED (BY OTHERS)
GASKETS: .1750" THK. 304 SPIRAL WOUND GPHT FILLED W/ 304 S.S.
INNER & OUTER COMP. RINGS.
2 SETS OF SPARE GASKETS REQUIRED.
PAINT: SEE SHT. -1A

Certified for Fabrication
By: [signature] Date: Feb. 13, 2023

PROJECT NAME: WORLD ENERGY RENEWABLES PROJECT
EQUIPMENT OWNER: AIR PRODUCTS MANUFACTURING LLC
SERVICE: DIESEL PRODUCT MP STEAM GENERATOR
LOCATION: WORLD ENERGY, PARAMOUNT, CA. USA
PRODUCT: DIESEL PRODUCT / MP STEAM
ITEM NO.: 18-X-358
AIR PRODUCTS P.O. NO.: 4505600056 / A8KM-4-402-PO-1
AP PROJECT NO: EN-20-7119
VDR CODE NO.: HCO9
SERIAL NO.: S21-13258-3
ENGINEER: SD
CUSTOMER / CLIENT: WORLD ENERGY PARAMOUNT

NO.	DATE	REVISIONS
6	2/13/23	ADD PIPE CLIPS/CUST. DD/DG
5	1/6/23	REV. NOZ. C1 & INFO/CUST DD/DG
4	11/7/22	REV. PER CUST. & FABSCO DD/DG
3	8/29/22	REV. PER CUST. DD/DG
2	7/13/22	REV. PER CUST. GO/DD
1	4/25/2022	REV./CUST. EMG

ASSEMBLY AND SPECIFICATIONS FOR
ONE 35/ 64-216 C K U

DWN. BY	DHS
DATE	12/8/21
CKD. BY	DiCarlo

Fabsco
SHELL & TUBE, LLC

DWG.NO. S21-13258-3-1 REV. 6

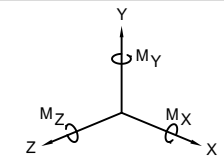

NOZZLE LOADS (1)

MK.	M_X LBF-FT	M_Y LBF-FT	M_Z LBF-FT	F_X LBF	F_Y LBF	F_Z LBF	LOAD BASES (3)
S1	1760	2840	2240	1700	1360	1700	4"-300#; 2 x API-660
S2A	9020	14600	11460	4560	3640	4560	8"-300#; 2 x API-660
S2B	9020	14600	11460	4560	3640	4560	8"-300#; 2 x API-660
T1	9020	14600	11460	4560	3640	4560	8"-300#; 2 x API-660
T2	9020	14600	11460	4560	3640	4560	8"-300#; 2 x API-660
B1	500	800	640	900	720	900	2"-300#; 2 x API-660 (2)
B2	500	800	640	900	720	900	2"-300#; 2 x API-660 (2)
B3	500	800	640	900	720	900	2"-300#; 2 x API-660 (2)
B4	500	800	640	900	720	900	2"-300#; 2 x API-660 (2)
B5	500	800	640	900	720	900	2"-300#; 2 x API-660 (2)
S3	275	440	352	495	396	495	2"-300#; 2 x API-660 (2)
C1	275	440	352	495	396	495	2"-300#; 2 x API-660 (2)
L1	500	800	640	900	720	900	2"-300#; 2 x API-660 (2)
L2	500	800	640	900	720	900	2"-300#; 2 x API-660 (2)
LG1	500	800	640	900	720	900	2"-300#; 2 x API-660 (2)
LG2	500	800	640	900	720	900	2"-300#; 2 x API-660 (2)
LT1	500	800	640	900	720	900	2"-300#; 2 x API-660 (2)
LT2	500	800	640	900	720	900	2"-300#; 2 x API-660 (2)
R1	5340	8620	6760	3500	2800	3500	6"-300#; 2 x API-660
	(4)	(4)	(4)	(4)	(4)	(4)	

CHANNEL COVER TO CHANNEL FLANGE BOLTING INFO (2)
STUD DIAMETER: 1 1/4" O.D.
NUMBER STUDS: (40)
STUD MATERIAL: SA-193-B7
BOLT TORQUE RANGE TO BE ACHIEVED: 1201.9 - 1385 FT-LBS

SHELL FLANGE TO TUBESHEET BOLTING INFO (2)
STUD DIAMETER: 1 1/4" O.D.
NUMBER STUDS: (44)
STUD MATERIAL: SA-193-B7
BOLT TORQUE RANGE TO BE ACHIEVED: 945 - 1072 FT-LBS

PROJECT NAME: WORLD ENERGY RENEWABLES PROJECT
EQUIPMENT OWNER: AIR PRODUCTS MANUFACTURING LLC
SERVICE: DIESEL PRODUCT MP STEAM GENERATOR
LOCATION: WORLD ENERGY, PARAMOUNT, CA. USA
PRODUCT: DIESEL PRODUCT / MP STEAM
ITEM NO.: 18-X-358
AIR PRODUCTS P.O. NO.: 4505600056 / A8KM-4-402-PO-1
AP PROJECT NO: EN-20-7119
VDR CODE NO.: HC09
SERIAL NO.: S21-13258-3
ENGINEER: SD
CUSTOMER / CLIENT: WORLD ENERGY PARAMOUNT

(2) (1) PAINT :
SOLVENT CLEAN PER SSPC-SP1
SANDBLAST PER SSPC-SP10
(1.5-2.5 MILS ANCHOR PROFILE)
CHANNEL SIDE ONLY!!! (PAINT SYSTEM #8):
PRIMER: ONE COAT SHERWIN WILLIAMS ZINC CLAD II
(2.5-4.0 MILS DFT)

SHELL SIDE ONLY!!! (PAINT SYSTEM #6):
PRIMER: ONE COAT SHERWIN WILLIAMS PHENICON HS
(8.0-10.0 MILS D.F.T.) (COLOR: LIGHT GRAY)
FINISH: ONE COAT SHERWIN WILLIAMS PHENICON HS
(8.0-10.0 MILS D.F.T.) (COLOR: LIGHT GRAY)

SUPPORTS ONLY : (PAINT SYSTEM #4B):
PRIMER : ONE COAT INTERNATIONAL INTERGARD 269
(2-3 MILS D.F.T.) (COLOR: RED)

DESIGN DATA	SHELL	TUBE
OPERATING PRESSURE PSIG	175	110
OPERATING TEMP. °F.	IN: 225 OUT: 376.8	IN: 596 OUT: 425
(2)(1) HYDROTEST TEMP. °F.	62deg/50deg F (min)	62deg/50deg F (min)
JOINT EFF.	1	0.85
FLUID NAME	BFW/MP STEAM	DIESEL PRODUCT
(1) FLUID DENSITY lb/ft^3	IN: 59.55 OUT: 54.56	IN: 33.67 OUT: 39.15
LETHAL SERVICE	NO	NO
DESIGN DUTY Btu/hr	42700000	
WIND CODE	ASCE 7-16 WIND SPEED: 101 MPH IMP. FACTOR: 1	
SEISMIC CODE	ASCE 7-16 IMP. FACTOR: 1.5 Fa: 1 Fv: 1.721	
(1)	Sds = 1.077 Site Class: D Sd_1: 0.996	
(2) APPLICABLE SPECIFICATIONS	3-11-10, 4-11-11, 4WEQ-1051, 4WGN-10001, 4WPI-670210, A8KM-PP-000-40002-A, A8KM-PP-000-50720-A, A8KM-PP-000-200001-A, A8KM-PP-000-500005-A, A8KM-PP-000-500510-A, A8KM-PP-000-500512-A, A8KM-PP-000-500520-A, A8KM-PP-000-500550-A, FORM 8232, SPEC-ENG-DOC001, SPEC-ENG-DOC002, SPEC-ENG-MQ042, SPEC-ENG-MQ057, SPEC-MED-DOC001 (3)	

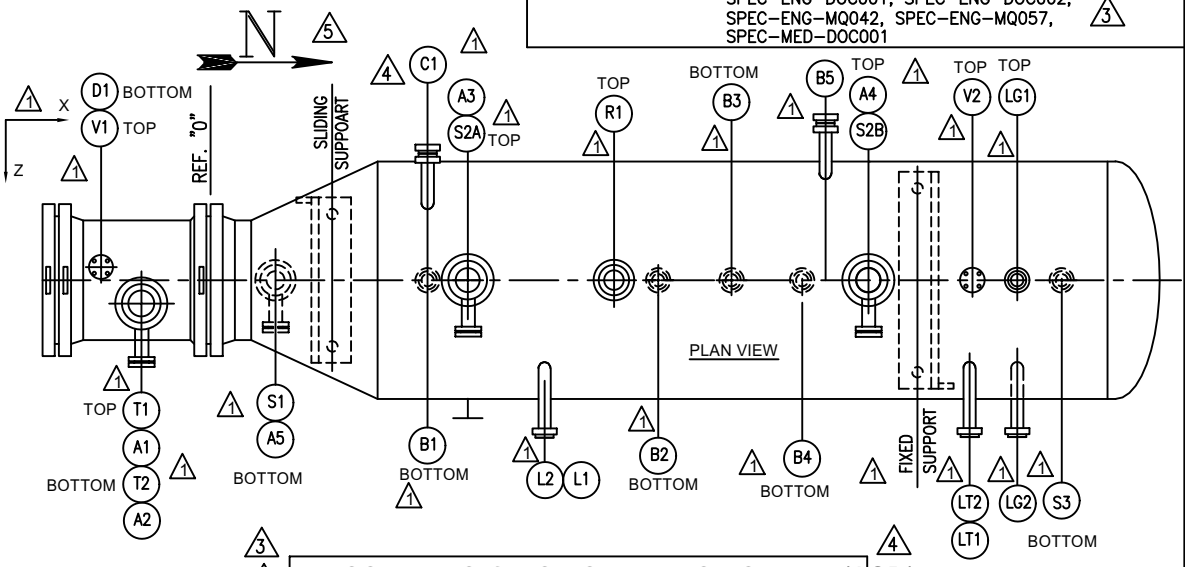

(3) (5) (4)

VESSEL DESIGN SEISMIC BASE SHEAR (ASD)

EMPTY CONDITION	20036 LBS.
OPERATING CONDITION	34109 LBS.

NO.	DATE	REVISIONS
(5)	2/13/23	ADD "NORTH",REV. CHART/CUST. DD/DG
(4)	1/6/23	REV.PER CUST. COMMENTS DD/DG
(3)	11/7/22	REV. PER CUST. DD/DG
(2)	8/29/22	REV. PER CUST. DD/DG
(1)	7/13/22	REV. PER CUST. GD/DD

SUPPLEMENTAL INFORMATION
ONE 35/64 - 216 C K U

DWN. BY: EMG
DATE: 4/25/2022
CKD. BY: GS

Fabsco
SHELL & TUBE, LLC

DWG.NO.: S21-13258-3-1A (1)
REV.: 5