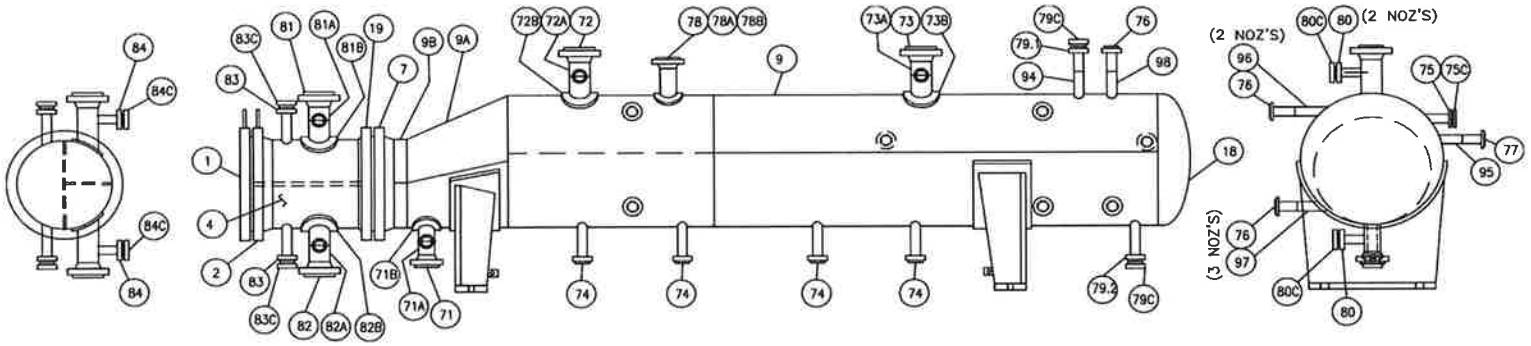

Mark No	MATERIAL DESCRIPTION		
	SUPPLIERS	HEAT No.	MATERIAL
1	FRISA	1222278	SA-350LF2CL1
2	FRISA	1222792	SA-350LF2CL1
4	NUCOR	0606036	SA--516-70
7	FRISA	1222762	SA-350LF2CL1
9	SSAB	W2B698	SA-516-70N
9A	SSAB	E2C317	SA-516-70N
9B	BURNS HARBOR PLATE	813P63640	SA-516-70N
18	PRESCOR	1600762	SA-516-70N
19	FRISA	1222815	SA-350LF2CL1
21	BENTELER	295771	SA-179
71	ST & H	00597A	SA-350LF2CL1
71A	VOESTALPINE	1023468381	SA-106B
71B	JSW	S30459	SA-516-70N
72	ST & H	B02378E	SA-350LF2CL1
72A	USS	EA4669	SA-106B
72B	BURNS HARBOR PLATE	813P63640	SA-516-70N
73	ST & H	B02378E	SA-350LF2CL1
73A	USS	EA4669	SA-106B
73B	BURNS HARBOR PLATE	813P63640	SA-516-70N
74	FCI	20901A	SA-350LF2CL1
75	FCI	22306A	SA-350LF2CL1

CUSTOMER:	AIR PRODUCTS MANUFACTURING, LLC		FABSCO SHELL & TUBE, LLC
PO NO:	4505600056/A8KM-4-402-PO-1	DATE	
ITEM NO:	18-X-358	AC	DWG No S21-13258-3-HS REV 0

7/10/24

Mark No			
	SUPPLIERS	HEAT No.	MATERIAL
75C	ST & H	B04447B	SA-350LF2CL1
76	FCI	20901A	SA-350LF2CL1
77	FCI	20901A	SA-350LF2CL1
78	METALFAR	09/35503	SA-350LF2CL1
78A	VOESTALPINE	1022356901	SA-106B
78B	BURNS HARBOR PLATE	813P63640	SA-516-70N
79.1	FEDERAL FLANGE	21905201	SA-350LF2CL1
79.2	FCI	GG090	SA-350LF2CL1
79C	ST & H	B04447B	SA-350LF2CL1
80	AMERIFORGE	DF5-KD	SA-350LF2CL1
80C	ST & H	B04447B	SA-350LF2CL1
81	ST & H	B02378E	SA-350LF2CL1
81A	USS	EA4669	SA-106B
81B	NUCOR	2602946	SA--516-70
82	ST & H	B02378E	SA-350LF2CL1
82A	USS	EA4669	SA-106B
82B	NUCOR	2602946	SA--516-70
83	FEDERAL FLANGE	21905201	SA-350LF2CL1
83C	ST & H	B04447B	SA-350LF2CL1
84	AMERIFORGE	DF5-KD	SA-350LF2CL1
84C	ST & H	B04447B	SA-350LF2CL1
94	AMERIFORGE	DPA-KD	SA-350LF2CL1
95	AMERIFORGE	DT2-KD	SA-350LF2CL1
96	AMERIFORGE	EA5-KD	SA-350LF2CL1
97	AMERIFORGE	EA5-KD	SA-350LF2CL1
98	AMERIFORGE	EA5-KD	SA-350LF2CL1

CUSTOMER:	AIR PRODUCTS MANUFACTURING, LLC		FABSCO SHELL & TUBE, LLC
PO NO:	4505600056/A8KM-4-402-PO-1	DATE	
ITEM NO:	18-X-358	AC	DWG No: S21-13258-3-HS REV: 0