----------API-660----------

1) STENCIL THE FOLLOWING ON THE EXCHANGER IN 3" HIGH (MIN.) WHITE BLOCK LETTERS::

   P.O. NO.: 4505600056

   ITEM NO.: 18-X-358

   SHIPPING WT.: 36,900#

   STENCIL ON SHELL IN TWO (2) PLACES, 180° APART: "DO NOT WELD ON VESSEL-PWHT"

2) STUDS, NUTS AND THREADED SURFACES SHALL BE COATED WITH MARKAL E-Z- BREAK COMPOUND BEFORE ASSEMBLY.

3) HYDRO TEST PRESSURE SHALL BE HELD FOR A MINIMUM OF ONE HOUR.

4) PLUG SHELL PORT INSIDE DIAMETER WITH A METAL TEMPLATE CONSISTING OF TWO DISCS (EACH HAVING A DIAMETER EQUAL TO THE DIAMETER OF THE BAFFLES) RIGIDLY MOUNTED PERPENDICULAR TO A SHAFT, AND SPACED 12" APART.

5) AT LEAST ONE SPOT RADIOGRAPH SHALL BE MADE OF EACH CIRCUMFERENTIAL AND LONGITUDINAL JOINT. SPOT RADIOGRAPHS SHALL INCLUDE EACH START, STOP AND BURN-THROUGH OF WELDS MADE BY THE AUTOMATIC SUBMERGED ARC PROCESS.

6) SPOT RADIOGRAPHS SHALL BE AT LEAST 10" LONG, OR SHALL BE FULL LENGTH WHERE WELDS ARE LESS THAN 10 INCHES LONG.

7) THE FLATNESS TOLERANCE (MAXIMUM DEVIATION FROM A PLANE) ON PERIPHERAL GASKET CONTACT SURFACES SHALL BE ± 1/32". USE OF A STRAIGHT EDGE TO DETERMINE FLATNESS TOLERANCE IS ACCEPTABLE.

8) FLATNESS OF GASKET SURFACES SHALL BE MEASURED WITH A DIAL INDICATOR. PASS PLATE GROOVES CAN BE MEASURED WITH A STRAIGHT EDGE.

9) FINAL VISUAL WELD INSPECTION SHALL BE PERFORMED AFTER POST WELD HEAT TREATMENT, IF REQUIRED.

10) ALL FINISHED WELDS ON SHELL SHALL BE M.T. AFTER P.W.H.T.

11) HEAT TREAT CHARTS REQUIRED.

----------API-660 CONT.----------

12) WELD METAIL AND HAZ. HARDNESS EXAMINATION REQUIREMENTS ARE AS FOLLOWS (AFTER PWHT, IF REQUIRED):
   -225 BHN, MAXIMUM.
   -A 10mm BALL IS REQUIRED FOR TESTING.
   -TEST ONE LONGITUDINAL AND ONE CIRCUMFERENTIAL WELD AND EACH CONNECTION TO COMPONENT WELD OF NOZZLES 2" NPT AND LARGER.
   -IF MORE THAN ONE WELDING PROCEDURE IS USED TO PERFORM LONGITUDINAL OR CIRCUMFERENTIAL WELDS, HARDNESS READINGS SHALL BE MADE OF THE WELDS DEPOSITED BY EACH PROCEDURE.
   -HARDNESS READINGS AND LOCATIONS SHALL BE RECORDED.
   -TESTING TO BE DONE ON INSIDE SURFACE IF ACCESSIBLE.

13) COAT EXPOSED MACHINED SURFACES WITH AN EASILY REMOVABLE RUST PREVENTATIVE.

△1 14) NOTIFY CUSTOMER TEN (10) DAYS PRIOR TO START OF FABRICATION, WITNESS OR HOLD POINTS.

15) MATCH MARKS SHALL BE PROVIDED TO ENSURE PROPER ALIGNMENT OF BOLTED JOINTS.

16) STAMP THE SERIAL No. ON O.D. OF TUBESHEETS, FLANGES AND CHANNEL COVERS.

17) HYDRO TEST CHARTS REQUIRED.

18) NOZZLE WELD PADS & SUPT PADS SHALL BE AIR & SOAP TESTED W/15 PSI (MIN), 25 PSI (MAX) AIR PRESSURE.

19) SHELLSIDE HYDRO TEST SHALL BE PERFORMED WITH CHANNEL COVER REMOVED.

20) TUBE WALL REDUCTION SHALL BE 8% MAXIMUM.

----------STANDARD SHOP PRACTICES----------

1) ALL BOLT HOLES SHALL STRADDLE NATURAL CENTERLINES.
2) GRIND INSIDE WELDS FLUSH WITH SHELL.
3) GRIND INSIDE WELDS SMOOTH WITH CHANNELS.
4) RADIUS ALL NOZZLES 1/8" INSIDE AT CYLINDER I.D.
5) SEAL WELD SUPPORT SADDLES WITH 1/4"(MIN) FILLET WELD.
6) EXCHANGER SHALL BE CLEANED INSIDE AND OUTSIDE OF WELD SPATTER, DIRT, WELD ROD AND OTHER DEBRIS.

△1 7) FOR MDMT OF +30° F., HYDRO TEST WATER TEMPERATURE SHALL NOT TO BE LESS THAN 50°F (MIN.).

8) ALL EXTERNAL ATTACHMENTS TO BE SEAL WELDED.

9) HYDROSTATIC TEST, USE CLEAN WATER WITH A CORROSION INHIBITOR ADDED.
   VOLUME OF WATER SHELLSIDE = 2645 GALLONS (APPROXIMATELY)
   VOLUME OF WATER TUBESIDE = 345 GALLONS (APPROXIMATELY)

10) ALL LIFTING DEVICE ATTACHMENT WELDS SHALL BE EXAMINED BY THE PT METHOD.

11) INSTALL SHIPPING COVERS ON ALL NOZZLES.

12) ALL SEAL WELDED EXTERNAL NON PRESSURE ATTACHMENTS REQUIRE A 1/4" NPT VENT HOLE.

13) AFTER THE HYDRO TEST, THE HEAT EXCHANGER SHALL BE COMPLETELY DRAINED AND THOROUGHLY DRIED.

---------NDT REQUIREMENTS---------

1) SHELL: FULL RADIOGRAPH.
2) CHANNELS: SPOT RADIOGRAPH.

PROJECT NAME: WORLD ENERGY RENEWABLES PROJECT
EQUIPMENT OWNER: AIR PRODUCTS MANUFACTURING LLC
SERVICE: DIESEL PRODUCT MP STEAM GENERATOR
LOCATION: WORLD ENERGY, PARAMOUNT, CA. USA
PRODUCT: DIESEL PRODUCT / MP STEAM
ITEM NO.: 18-X-358
AIR PRODUCTS P.O. NO.: 4505600056 / A8KM-4-402-PO-1
AP PROJECT NO: EN-20-7119
VDR CODE NO.: BE04
SERIAL NO.: S21-13258-3
ENGINEER: SD
CUSTOMER / CLIENT: WORLD ENERGY PARAMOUNT

NO.	DATE	REVISIONS
△2	8/29/22	REV. PER CUST. COMMENTS DD/DG
△1	7/12/2022	ADDED DWG/FABSCO GO/DD

JOB NOTES

DWN. BY: GO
DATE: 7/12/22
CKD. BY: DiCarlo

Fabsco SHELL & TUBE, LLC

DWG. NO.: S21-13258-3-1B
REV.: 2

----------CUST. NOTES----------

1) ALL SHARP EDGES SHALL BE GROUND TO A .078" RAD. (MIN.)
2) THE INITIAL ROOT PASS OF DBL WELDED GROOVE JOINTS, INCLUDING ROOT TACK WELDS, SHALL BE CHIPPED, GROUND &/OR GOUGED TO SOUND METAL, AREA TO BE EITHER MPE OR DPE PRIOR TO WELDING FROM OTHER SIDE.
3) ON SHELLSIDE, ALL CAT. A,B,C,D WELDS, THE WELDS & ADJACENT METAL TO BE HEATED TO 600°F., WRAPPED WITH INSULATION & ALLOWED TO COOL UNTIL PWHT CAN BE PERFORMED LATER.
4) PRESSURE CONTAINING WELDS, INTERNAL ATTACHMENT WELDS, & SUPPORT WELDS SHALL BE CONTOURED TO PERMIT PROPER INTERPRETATION OF ANY REQ'D. UT EXAMINATION.
5) ALL WELDING CONSUMABLES SHALL BE OF LOW HYDROGEN TYPE. E60XX ELECTRODES SHALL NOT BE USED!
6) TEMPORARY ATTACHMENTS TO BE REMOVED BY MECHANICALLY OR THERMALLY CUT WITHIN 1/8" OF SURFACE. AREA TO BE GROUND FLUSH W/ SURROUNDING AREAS FOLLOWED BY MPE OR DPE. DO NOT "KNOCK OFF."
7) NOZ. TO CYL. WELDS, BRANCH NOZ. WELDS WHICH CAN'T BE X-RAYED SHALL BE UT.
8) ALL ARC STRIKES, START, STOPS SHALL BE CONFINED TO THE WELDING GROOVE OR SHALL BE REMOVED BY LIGHT GRINDING FOLLOWED BY MPT OR DPE.
9) HYDRO TEST WATER TEMP. AT ALL LOCATIONS SHALL BE AT LEAST 50°F. AT ALL TIMES DURING HYDROTEST.
10) THE USE OF HIGH NICKEL CONTENT C'STL. WELDING CONSUMABLES OR C-1/2Mo CONSUMABLES IS PROHIBITED.
11) ALL WELD SURFACES TO BE VISUALLY INSPECTED TO ENSURE THAT LAMINATIONS &/OR OTHER DEFECTS ARE NOT PRESENT.
12) IF PWHT IS REQ'D. ALL PLATE EDGES SHALL BE MPT OR DPE BEFORE WELDING.

----------CUST. NOTES CONT.----------

13) ACCEPTANCE NDE SHALL BE PERFORMED AFTER ANY REQ'D. PWHT.
14) PEENING IS NOT PERMITTED FOR PURPOSE OF CLEANING WELDS.
△2 15) EXCH'S. TO BE STENCILED W/ THE FOLLOWING"
"HEIGHTH" : 11'-0"
"WIDTH" : 8'-0"
"LENGTH" : 24'-6"
"WEIGHT" : 36,900#
16) FINISHED EXCHANGER IS TO BE WEIGHTED. TO BE WITHIN +/- 2% OR BETTER ACCURACY. A CALIBRATED WEIGHT CERTIFICATE SHALL BE PROVIDED.
17) THE TEMPERATURE OF THE HYDRO TEST WATER & THE EXCHANGER SHALL BE EQUALIZED PRIOR TO HYDROTEST.
18) STAMPING TO BE DONE WITH "LOW STRESS" STAMPS.
19) LIFTING POINTS & CENTER OF GRAVITY SHALL BE MARKED ON EXCHANGER.
20) THE ENTIRE SURFACE OF FORGINGS INCLUDING WELD BEVEL SHALL BE EXAMINED BY MT AFTER FINISH MACHINING & PRIOR TO WELDING.
21) EXCHANGER SHALL BE IN A MANNER WHICH KEEPS NOZZLES FROM TOUCHING THE TRUCK BEDS AND/OR SURFACES AT OFF-LOADING AREA AT JOBSITE.
22) PRIOR TO WELDING, JOINTS SHALL BE VISUALLY INSPECTED FOR CLEANLINESS, CONDITION OF TACK WELDS IF PRESENT, PREHEAT IF SPECIFIED, AND FILLER METAL TO BE USED.
23) REQUIRED PREHEAT TEMPERATURE SHALL ALSO APPLY TO THERMAL CUTTING AND TACK WELDING.
24) PREHEAT ALL JOINT TO A MINIMUM OF 125° F. WHEN MOISTURE REMOVAL IS REQUIRED.
25) "DELETED"

----------CUST. NOTES CONT.----------

△2 26) THE TEMPERATURE OF THE HYDRO TEST WATER & THE EXCHANGER SHALL BE EQUALIZED PRIOR TO HYDROTEST.
△2 27) STAMPING TO BE DONE WITH "LOW STRESS" STAMPS.
△2 28) WELDS FROM EACH WELD PROCEDURE, WELDER/WELDING OPERATOR SHALL BE SPOT RADIOGRAPHED IF ACCESSIBLE.
△2 29) NON PRESSURE PARTS TO PRESSURE CONTAINING COMPONENT WELDS SHALL BE 100% M.P.E. OR D.P.E.
△2 30) ALL LONG & CIRC SEAMS, NOZZLE ATTACHMENT WELDS SHALL BE FULL PENETRATION WELDED AS SHOWN ON DWG. -13.
△2 31) FOR OFFSET NOZZLES, THE MIN. THROAT DIMENSIONS SHALL BE MAINTAINED.
△2 32) ALL WELDING SHALL BE IN ACCORDANCE WITH ASME SECT. IX & PROJECT SPECIFICATIONS A8KM-PP-000-500550-A, A8KM-PP-000-500532-A, 4WEQ-1051, 3-11-10, 4-11-11.
△2 33) ALL SHELL & HEAD JOINTS SHALL BE BACK WELDED JOINTS.

PROJECT NAME: WORLD ENERGY RENEWABLES PROJECT
EQUIPMENT OWNER: AIR PRODUCTS MANUFACTURING LLC
SERVICE: DIESEL PRODUCT MP STEAM GENERATOR
LOCATION: WORLD ENERGY, PARAMOUNT, CA. USA
PRODUCT: DIESEL PRODUCT / MP STEAM
ITEM NO.: 18-X-358
AIR PRODUCTS P.O. NO.: 4505600056 / A8KM-4-402-PO-1
AP PROJECT NO: EN-20-7119
VDR CODE NO.: BE04
SERIAL NO.: S21-13258-3
ENGINEER: SD
CUSTOMER / CLIENT: WORLD ENERGY PARAMOUNT

NO.	DATE	REVISIONS
△2	8/29/22	REV. PER CUST. COMMENTS DD/DG
△1	7/14/22	ADDED DWG./FABSCO G.O./DD

JOB NOTES (CONT.)

DWN. BY G.O.
DATE 7/14/22
CKD. BY DiCarlo

Fabsco
SHELL & TUBE, LLC

DWG. NO. S22-13258-3-1C
REV. 2

COVER NOTES:
1) MACHINE ALL COVER SURFACES TO 250 RMS EXCEPT GASKET FACES TO BE 125 RMS.
2) ALL COVER PASS PLATE GROOVE WIDTHS TO BE 1/2" WIDE.
3) ALL COVER PASS PLATE GROOVE JUNCTIONS TO BE NOTCHED 3/8" AT 45 Deg.

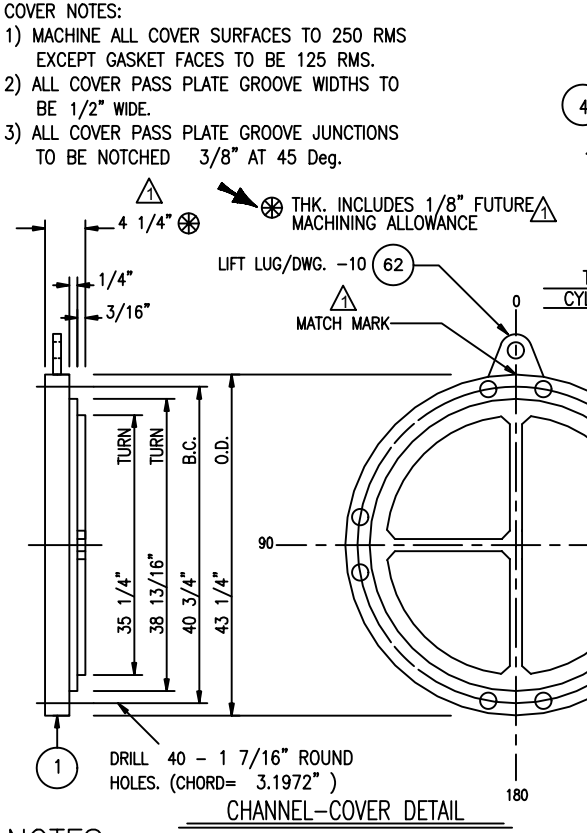

CHANNEL-COVER DETAIL

TUBESHEET TO CYL. WELD DETAIL

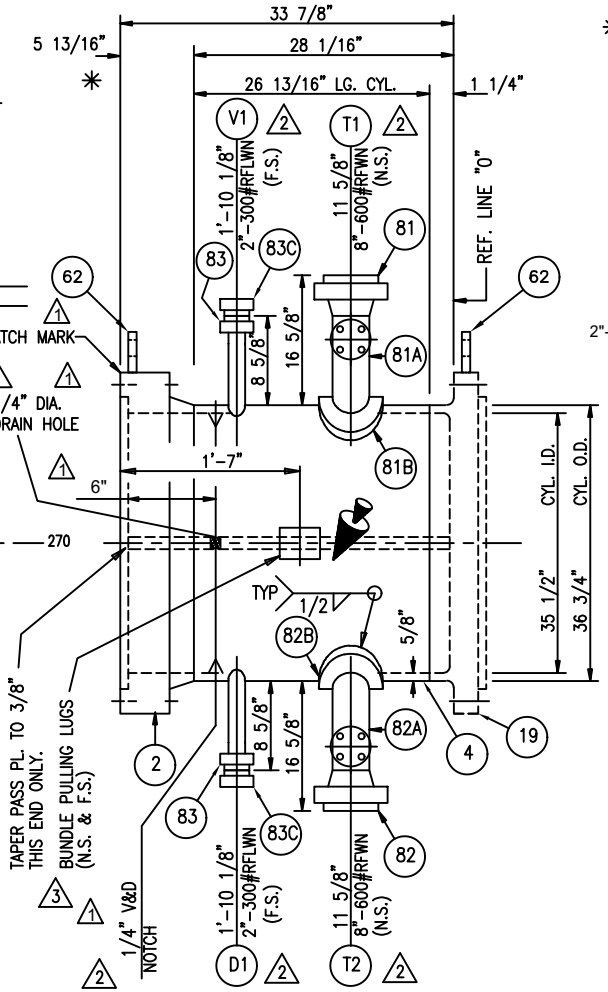

CHANNEL SIDE VIEW

* MACHINE GASKET FACING TO 125 RMS AFTER ALL WELDING.
FOR FLANGE DETAILS SEE DWG. 12

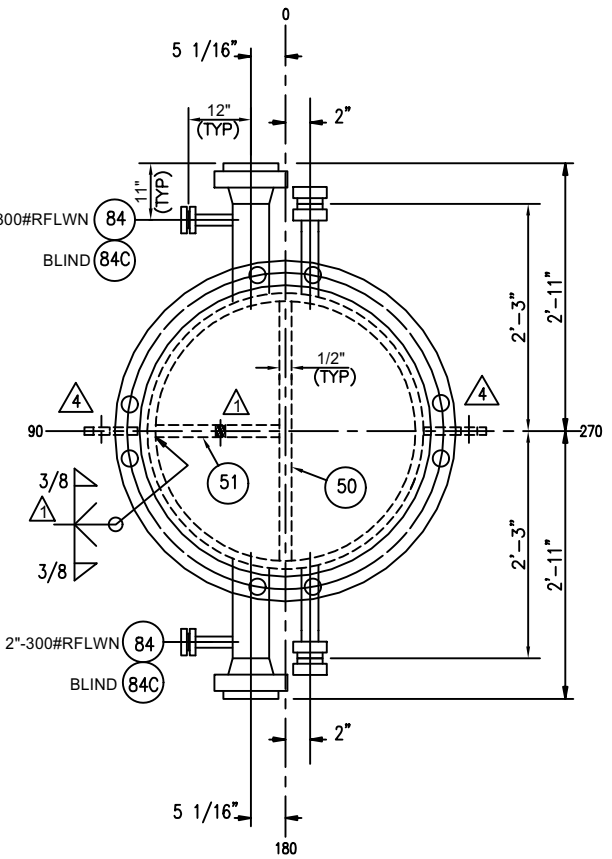

CHANNEL END VIEW

NOTES:
1) ALL WELDING TO BE IN ACCORDANCE W/ PROCEDURES ON DWG. -19.
2) ALL BOLT HOLES TO STRADDLE CENTER LINES.
3) FOR WELD AND BEVEL DETAILS SEE DWG. -13.
4) GRIND ALL INSIDE WELDS SMOOTH.
5) SPOT RADIOGRAPHY.

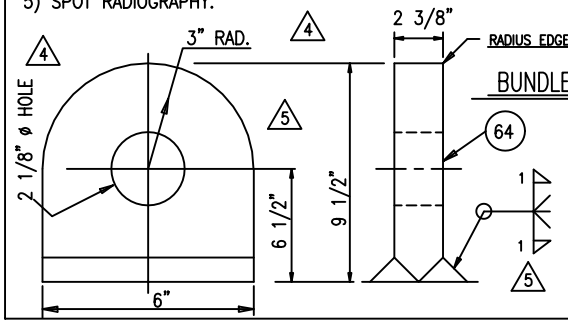

BUNDLE PULL LUG DETAIL
2-REQUIRED

PROJECT NAME: WORLD ENERGY RENEWABLES PROJECT
EQUIPMENT OWNER: AIR PRODUCTS MANUFACTURING LLC
SERVICE: DIESEL PRODUCT MP STEAM GENERATOR
LOCATION: WORLD ENERGY, PARAMOUNT, CA. USA
PRODUCT: DIESEL PRODUCT / MP STEAM
ITEM NO.: 18-X-358
AIR PRODUCTS P.O. NO.: 4505600056 / A8KM-4-402-PO-1
AP PROJECT NO: EN-20-7119
VDR CODE NO.: BE04
SERIAL NO.: S21-13258-3
ENGINEER: SD
CUSTOMER / CLIENT: WORLD ENERGY PARAMOUNT

NO.	DATE	REVISIONS
5	2/13/22	REV. PER CUST. COMMENTS DD/DG
4	1/6/23	REV. PULL LUG/CUST. DD/DG
3	11/7/22	REV. PER FABSCO DD/DG
2	8/29/22	REV. PER CUST. DD/DG
1	7/14/22	REV. PER CUST. GD/DD

FRONT CHANNEL DETAILS

DWN. BY	DWG.NO.	REV.
EMG	S21-13258-3-2	5
DATE 4-26-2022		
CKD. BY GS		

Fabsco
SHELL & TUBE, LLC

PROJECT NAME: WORLD ENERGY RENEWABLES PROJECT
EQUIPMENT OWNER: AIR PRODUCTS MANUFACTURING LLC
SERVICE: DIESEL PRODUCT MP STEAM GENERATOR
LOCATION: WORLD ENERGY, PARAMOUNT, CA. USA
PRODUCT: DIESEL PRODUCT / MP STEAM
ITEM NO.: 18-X-358
AIR PRODUCTS P.O. NO.: 4505600056 / A8KM-4-402-PO-1
AP PROJECT NO: EN-20-7119
VDR CODE NO.: BE04
SERIAL NO.: S21-13258-3
ENGINEER: SD
CUSTOMER/CLIENT: WORLD ENERGY PARAMOUNT

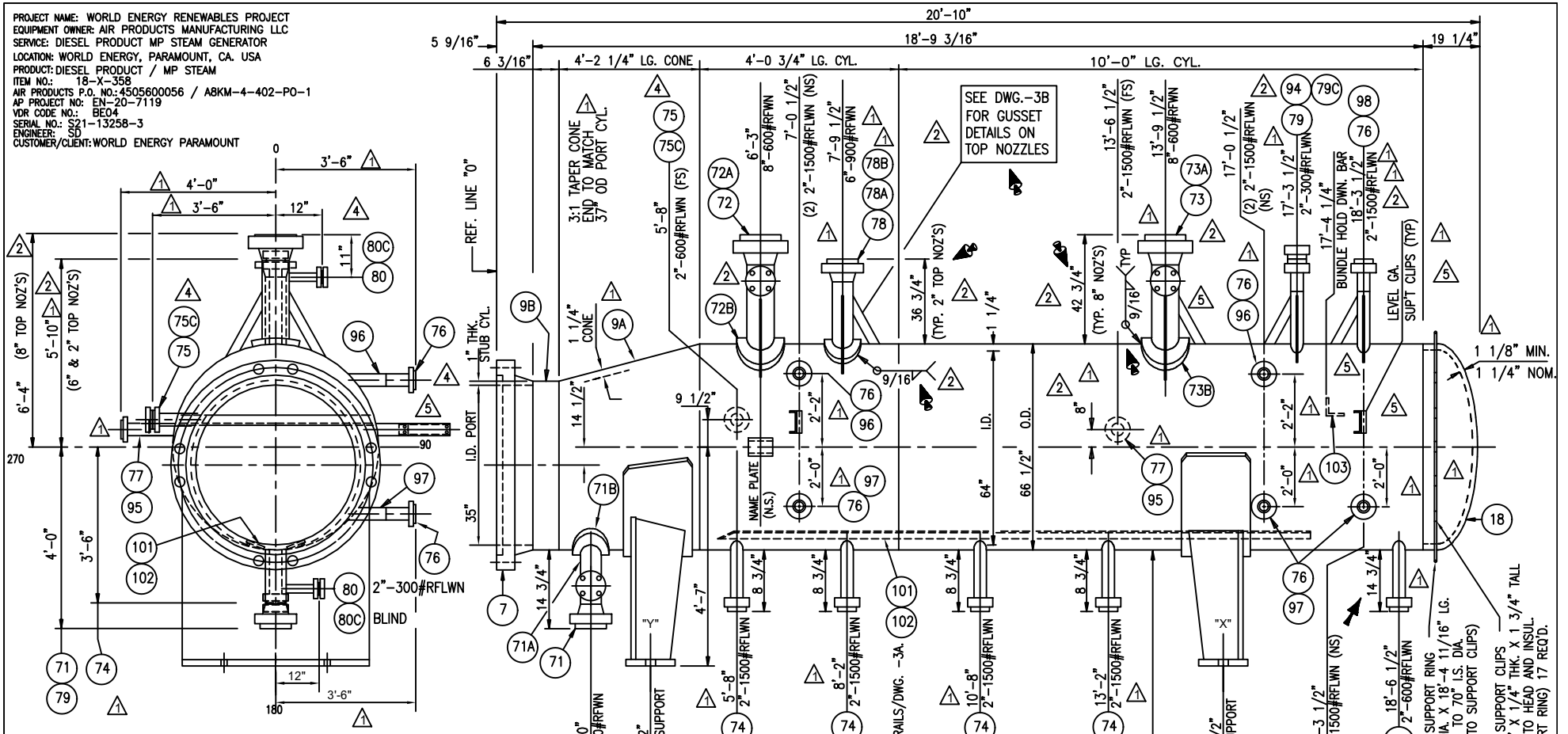

SHELL SIDE VIEW

SHELL END VIEW

NOTES:

1) ALL WELDING TO BE IN ACCORDANCE W/ PROCEDURES ON DWG. -19. ⚠1
2) ALL BOLT HOLES TO STRADDLE CENTER LINES.
3) FOR WELD AND BEVEL DETAILS SEE DWG. -13.
4) FOR SUPPORT DETAILS SEE DWG. -9 & -9A
5) GRIND ALL INSIDE WELDS FLUSH.
6) FULL RADIOGRAPHY. ⚠1
7) FOR FLANGE DETAILS SEE DWG. -12
8) POST-WELD HEAT TREAT SHELL:
   A) HEAT FROM 800 deg.F TO 1175 +0/-25 deg.F AT 320 deg.F PER HOUR.
   B) HOLD AT 1175 +0/-25 deg.F FOR 1.25 -HOUR(MIN).
   C) COOL FROM 1175 +0/-25 deg.F TO 800 deg.F AT 400 deg.F PER HOUR.
   D) FURTHER COOLING MAY BE IN STILL AIR.

NO.	DATE	REVISIONS
⚠5	2/13/23	ADD CLIPS, REV GUSSETS/CUST DD/DG
⚠4	1/6/22	REV. "C1" LOCAL/CUST. DD/DG
⚠3	10/14/22	REMOVED "HOLD"/FABSCO DD
⚠2	8/29/22	REV. PER CUST. DD/DG
⚠1	7/15/22	REV. PER CUST. GD/DD

SHELL DETAILS

DWN. BY: EMG
DATE: 4-26-2022
CKD. BY: GS

Fabsco
SHELL & TUBE, LLC

DWG.NO. S21-13258-3-3
REV. 5

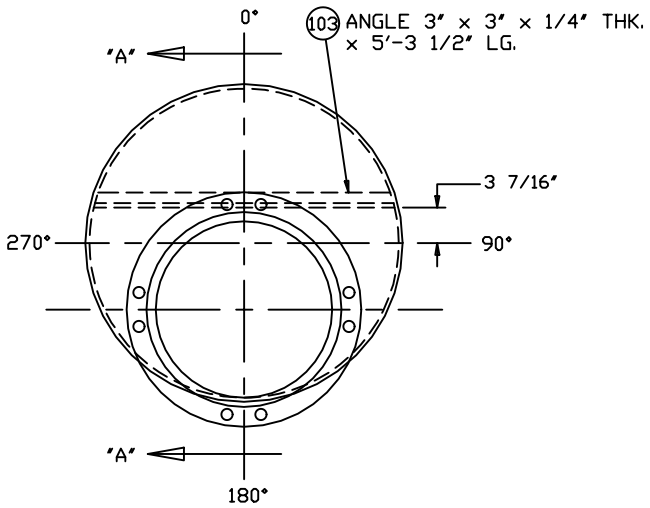

END VIEW
HOLD-DOWN ANGLE DETAIL

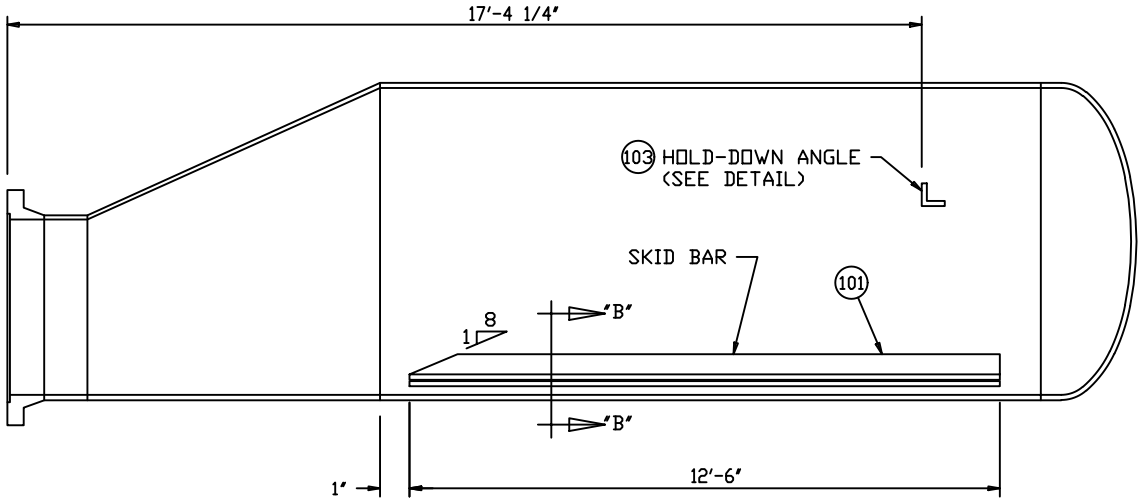

SECTION "A-A"

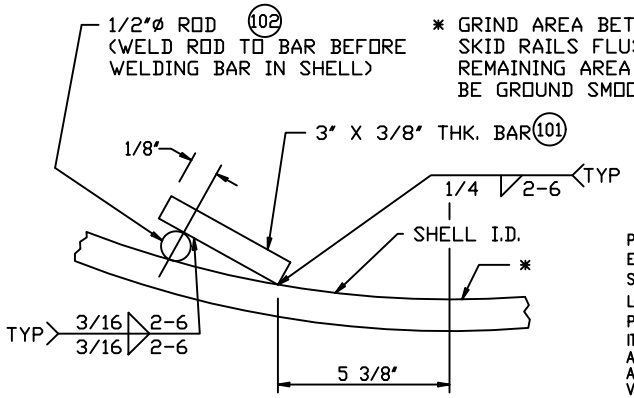

SECTION "B-B" (TYP)

PROJECT NAME: WORLD ENERGY RENEWABLES PROJECT
EQUIPMENT OWNER: AIR PRODUCTS MANUFACTURING LLC
SERVICE: DIESEL PRODUCT MP STEAM GENERATOR
LOCATION: WORLD ENERGY, PARAMOUNT, CA. USA
PRODUCT: DIESEL PRODUCT / MP STEAM
ITEM NO.: 18-X-358
AIR PRODUCTS P.O. NO.: 4505600056 / A8KM-4-402-PO-1
AP PROJECT NO: EN-20-7119
VDR CODE NO.: BE04
SERIAL NO.: S21-13258-3
ENGINEER: SD
CUSTOMER / CLIENT: WORLD ENERGY PARAMOUNT

NO.	DATE	REVISIONS

SHELL INTERNAL DETAILS

DWN. BY: EMG
DATE: 4-26-2022
CKD. BY: GS

Fabsco
SHELL & TUBE, LLC

DWG. NO.: S21-13258-3-3A
REV.: 0

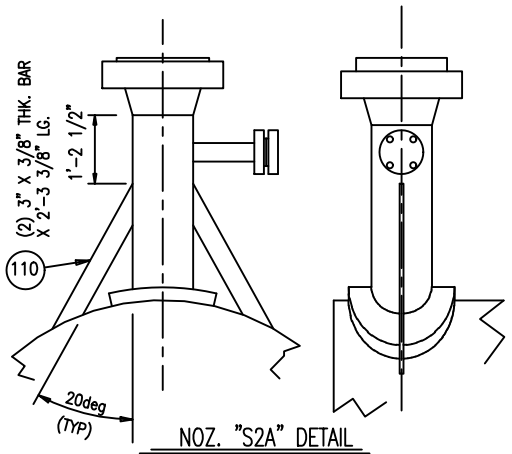

NOZ. "S2A" DETAIL

NOTE : DUE TO LIMITED AREA AROUND NOZ. "S2A" ONLY 2 BARS ARE REQ'D ON THIS NOZZLE.

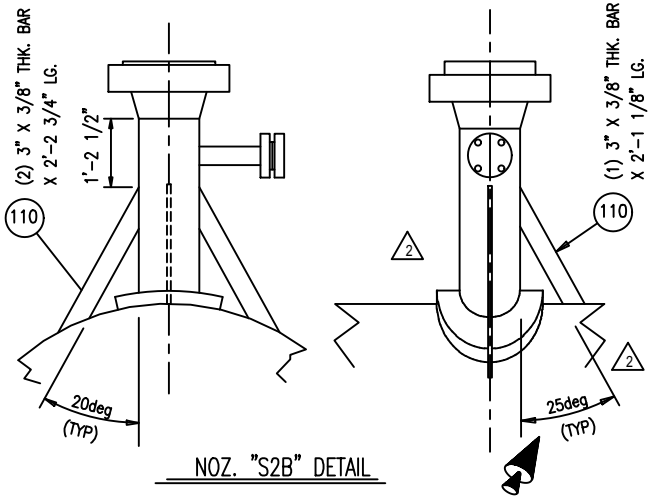

NOZ. "S2B" DETAIL

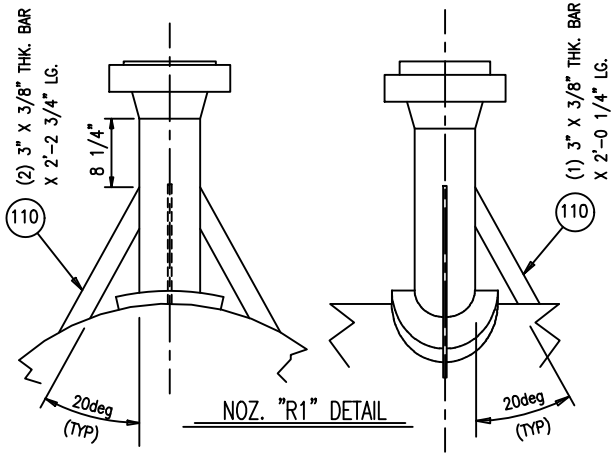

NOZ. "R1" DETAIL

NOTE : SEAL WELD GUSSETS TO NOZZLE AND SHELL CYLINDER W/ 1/4" (MIN) F.W.

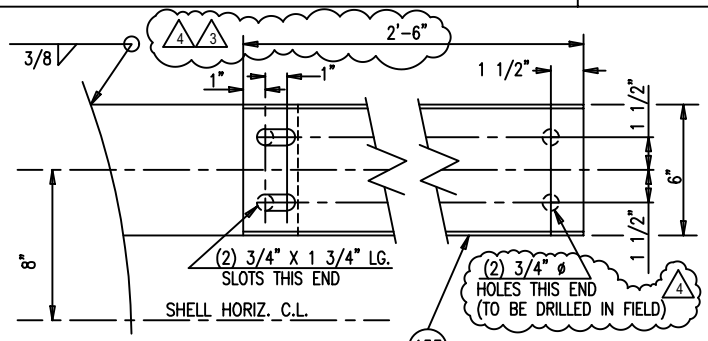

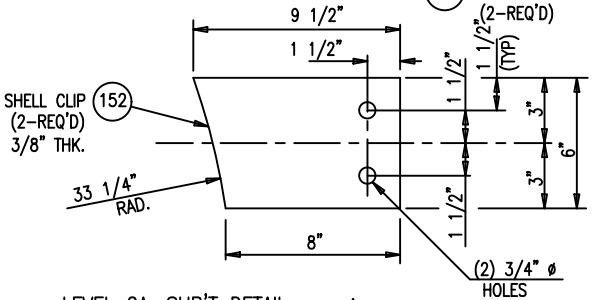

LEVEL GA. SUP'T DETAIL 2

TWO (2) - REQ'D
SEE DWG -3 FOR LOCATIONS

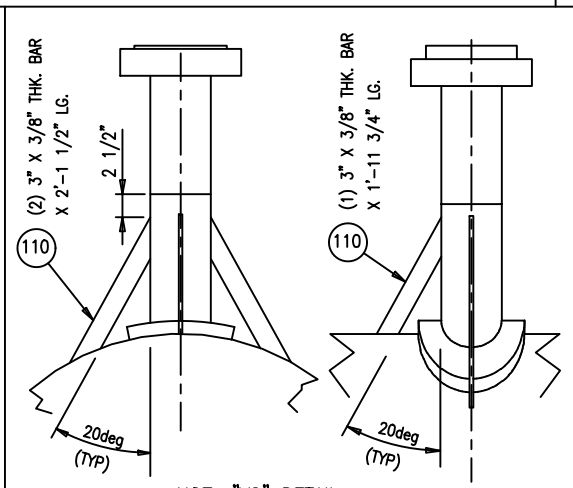

NOZ. "V2" DETAIL

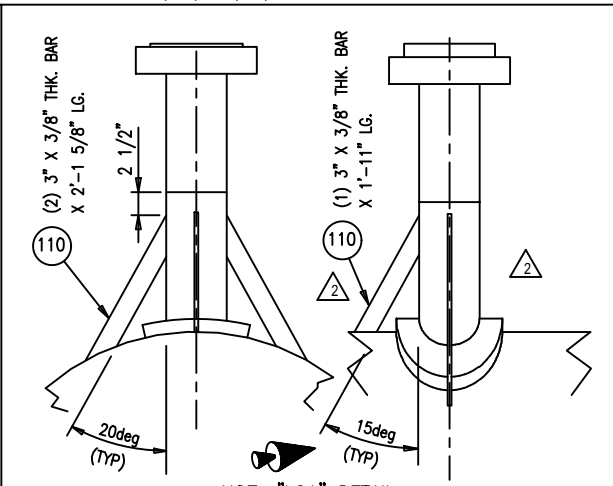

NOZ. "LG1" DETAIL

PROJECT NAME: WORLD ENERGY RENEWABLES PROJECT
EQUIPMENT OWNER: AIR PRODUCTS MANUFACTURING LLC
SERVICE: DIESEL PRODUCT MP STEAM GENERATOR
LOCATION: WORLD ENERGY, PARAMOUNT, CA. USA
PRODUCT: DIESEL PRODUCT / MP STEAM
ITEM NO.: 18-X-358
AIR PRODUCTS P.O. NO.: 4505600056 / A8KM-4-402-PO-1
AP PROJECT NO: EN-20-7119
VDR CODE NO.: BE04
SERIAL NO.: S21-13258-3
ENGINEER: SD
CUSTOMER/CLIENT: WORLD ENERGY PARAMOUNT

NO.	DATE	REVISIONS
4	3/28/23	REV. PER CUST. COMMENTS DD/DG
3	3/10/23	REV. PER CUST. COMMENTS DD/DG
2	2/14/23	REV. PER CUST. COMMENTS DD/DG
1	8/29/22	ADDED DETAIL/CUST. DD/DG

SHELL NOZ. GUSSET DETAILS

DWN. BY: DiCarlo
DATE: 8/29/22
CKD. BY: DG

Fabsco
SHELL & TUBE, LLC

DWG.NO. S21-13258-3-3B
REV. 4

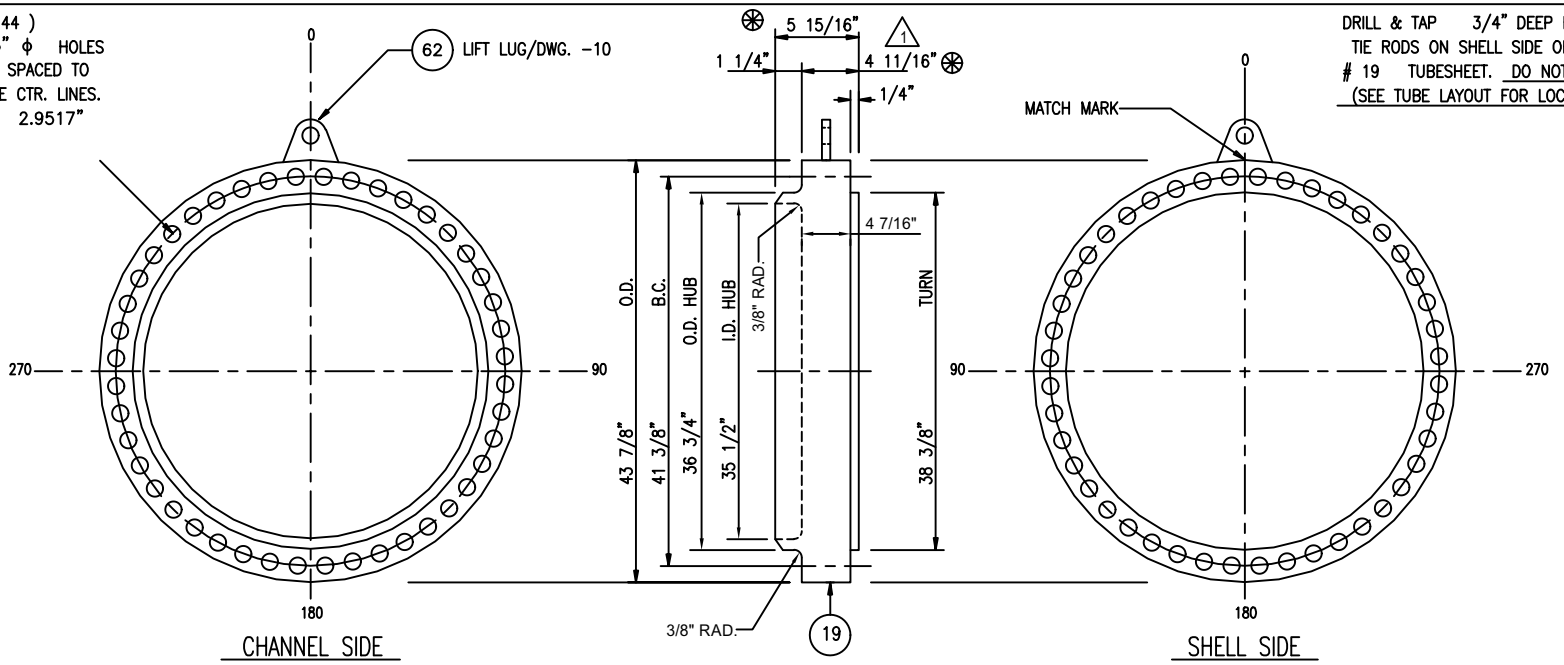

1 THK. INCLUDES 1/8" FUTURE MACHINING ALLOWANCE

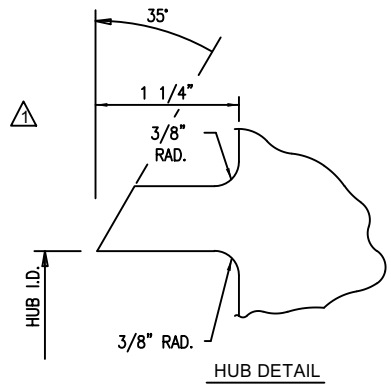

HUB DETAIL

NOTES:

1) MACHINE ALL SURFACES TO 250 RMS EXCEPT GASKET FACES TO BE 125 RMS.

2) SEE DWG. -4A FOR STRENGTH WELDING AND TUBE HOLE GROOVING DETAILS.

PROJECT NAME: WORLD ENERGY RENEWABLES PROJECT
EQUIPMENT OWNER: AIR PRODUCTS MANUFACTURING LLC
SERVICE: DIESEL PRODUCT MP STEAM GENERATOR
LOCATION: WORLD ENERGY, PARAMOUNT, CA. USA
PRODUCT: DIESEL PRODUCT / MP STEAM
ITEM NO.: 18-X-358
AIR PRODUCTS P.O. NO.: 4505600056 / A8KM-4-402-PO-1
AP PROJECT NO: EN-20-7119
VDR CODE NO.: BE04
SERIAL NO.: S21-13258-3
ENGINEER: SD
CUSTOMER / CLIENT: WORLD ENERGY PARAMOUNT

NO.	DATE	REVISIONS
1	7/15/22	REV. PER CUST. & FABSCO GD/DD

TUBESHEET DETAILS

DWN. BY: EMG
DATE: 4-25-2022
CKD. BY: GS

Fabsco
SHELL & TUBE, LLC

DWG.NO.: S21-13258-3-4
REV.: 1

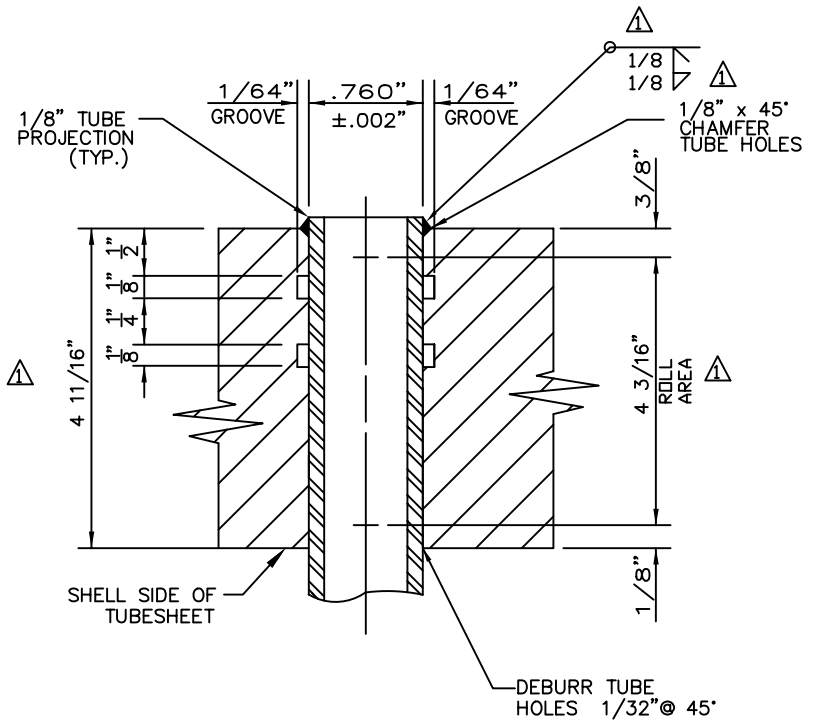

TUBE TO TUBESHEET STRENGTH WELD AND FABRICATION SEQUENCE

* *

WELD PROCEDURE: T-234 1

1. ALL COMPONENTS TO BE DEBURRED AND METICULOUSLY CLEANED PRIOR TO WELDING. CHAMFER TUBE HOLES ON TUBESIDE.
2. PWHT OF TUBESHEET IS REQUIRED. FINAL TUBE HOLE SIZING SHALL BE OBTAINED BY REAMING AFTER PWHT. 1
3. PRE-HEAT TUBESHEET TO A MINIMUM OF 150° F. AND MAINTAIN DURING WELDING PROCESS.
4. INSTALL TUBES AND SET PROJECTIONS.
5. EACH TUBE SHALL BE WELDED INDIVIDUALLY WITHOUT STOPPING.
6. FUSION WELD FIRST PASS USING GTAW PROCESS WITH FILLER METAL.
7. LIQUID PENETRANT EXAMINE ALL WELDS AND THEN CLEAN THEM WITH DEGREASER. REPAIR ANY DEFECTIVE WELDS AND RECHECK.
8. WELD SECOND PASS USING GTAW PROCESS WITH FILLER METAL.
9. REPEAT STEP 7. 1
10. PRIOR TO EXPANDING TUBES, WELDS SHALL BE VERIFIED BY 15 PSIG SHELL SIDE AIR TEST & USING SOAP & WATER SOLUTION ON TUBESHEET FACE TO REVEAL LEAKS.
11. ROLL TUBES INTO TUBESHEET PER DETAIL ABOVE. TUBES TO BE ROLLED FOR TUBESHEET THICKNESS SHOWN ABOVE. STOP SHALL BE USED ON TUBE ROLLER TO THAT ASSURES EXPANSION IS WITHIN LIMITS OF ROLL AREA.
12. REPEAT STEP 7. 1
13. HELIUM LEAK TEST WELD JOINTS PER ASME SEC. V, ART. 10. THE SHELL SIDE SHALL BE PRESSURIZED WITH HELIUM WHILE THE UNIT IS INCLINED TO PROVIDE GOOD FLOW OF HELIUM TO COLLECTION POINT ON TUBE SIDE. ANY LEAKAGE IN EXCESS OF 1 X 10-4 STANDARD CC/SEC WARRANTS REPAIR.
14. A CERTIFIED TEST REPORT OF THE SUCCESSFUL HELIUM TEST SHALL BE PROVIDED AND SIGNED BY AN INDEPENDANT 3RD PARTY WITNESS.

PROJECT NAME: WORLD ENERGY RENEWABLES PROJECT
EQUIPMENT OWNER: AIR PRODUCTS MANUFACTURING LLC
SERVICE: DIESEL PRODUCT MP STEAM GENERATOR
LOCATION: WORLD ENERGY, PARAMOUNT, CA. USA
PRODUCT: DIESEL PRODUCT / MP STEAM
ITEM NO.: 18-X-358
AIR PRODUCTS P.O. NO.: 4505600056 / A8KM-4-402-PO-1
AP PROJECT NO: EN-20-7119
VDR CODE NO.: BE04
SERIAL NO.: S21-13258-3
ENGINEER: SD
CUSTOMER / CLIENT: WORLD ENERGY PARAMOUNT

NO.	DATE	REVISIONS
1	7/15/22	REV. PER CUST. GD/DD

TUBE TO TUBESHEET
STRENGTH WELD DETAIL

DWN. BY: EMG
DATE: 4-25-2022
CKD. BY: GS

Fabsco
SHELL & TUBE, LLC

DWG.NO.: S21-13258-3-4A
REV.: 1

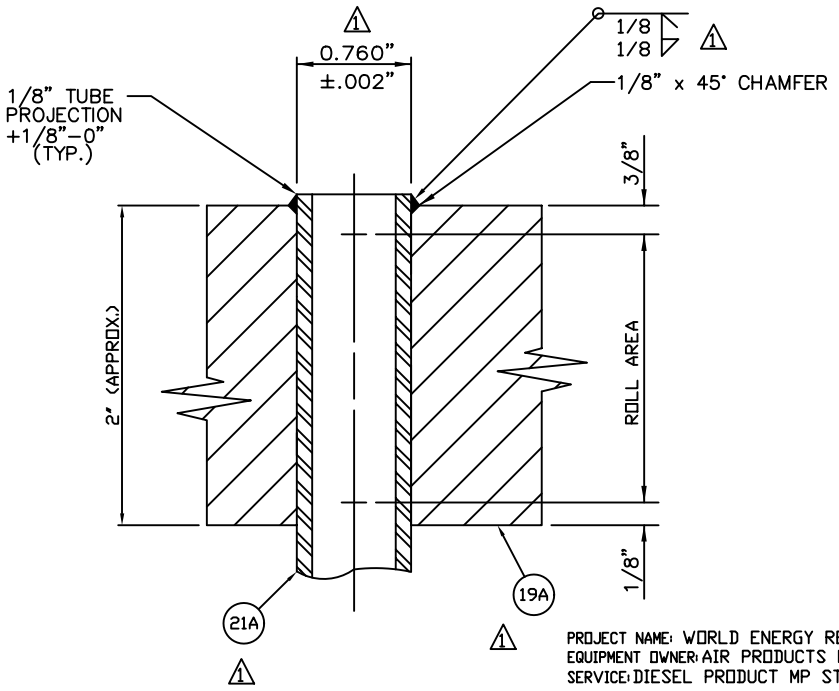

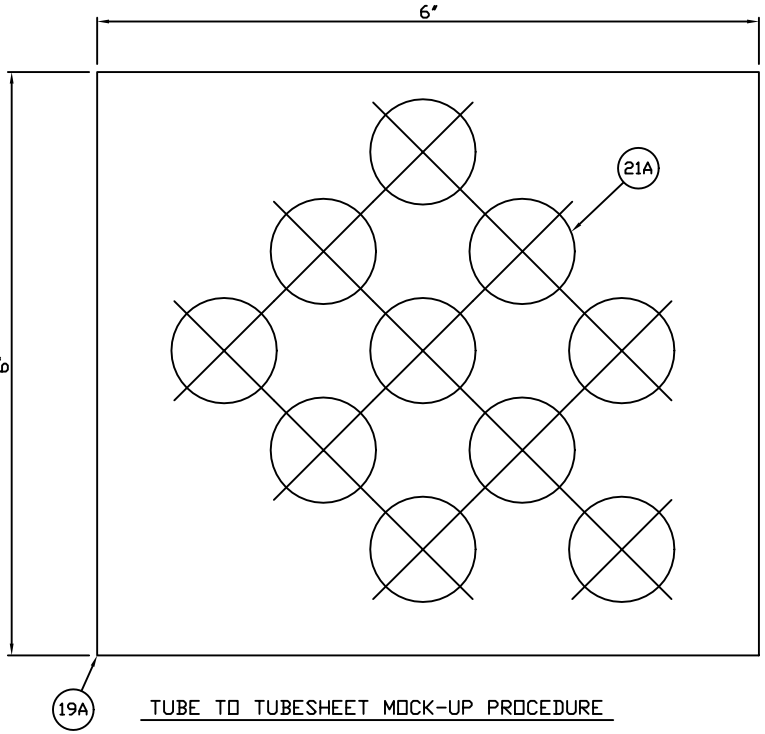

PROJECT NAME: WORLD ENERGY RENEWABLES PROJECT
EQUIPMENT OWNER: AIR PRODUCTS MANUFACTURING LLC
SERVICE: DIESEL PRODUCT MP STEAM GENERATOR
LOCATION: WORLD ENERGY, PARAMOUNT, CA. USA
PRODUCT: DIESEL PRODUCT / MP STEAM
ITEM NO.: 18-X-358
AIR PRODUCTS P.O. NO.: 4505600056 / A8KM-4-402-PO-1
AP PROJECT NO: EN-20-7119
VDR CODE NO.: BE04
SERIAL NO.: S21-13258-3
ENGINEER: SD
CUSTOMER / CLIENT: WORLD ENERGY PARAMOUNT

TUBE TO TUBESHEET MOCK-UP PROCEDURE

1. DRILL (10) HOLES ON 1" ROT SQ. PITCH.
2. VISUALLY EXAMINE & PT AFTER WELDING FIRST & SECOND PASSES.
3. MOCK-UP TO BE SECTIONED, POLISHED & ETCHED.
4. EXAMINE FOR CRACKS AT 10X MAGNIFICATION.
5. RESULTS AND SECTIONED PIECE TO BE MADE AVAILABLE TO CUSTOMER FOR REVIEW.

TUBE TO TUBESHEET STRENGTH WELD MOCK-UP

* *

1. DRILL TUBE HOLES PER DETAIL ABOVE.
2. CHAMFER TUBE HOLES ON ONE SIDE AND DEBURR TUBE HOLES ON OTHER SIDE.
3. CLEAN AREAS TO BE WELDED AND ROLLED WITH DEGREASER.
4. INSTALL TUBES IN TEST BLOCK AND SET PROJECTIONS.
5. WELD FIRST PASS USING GTAW PROCESS WITH FILLER METAL W/ WPS: T-234. 1
6. LIQUID PENETRANT EXAMINE ALL WELDS AND THEN CLEAN THEM WITH DEGREASER. REPAIR ANY DEFECTIVE WELDS AND RECHECK.
7. WELD SECOND PASS USING GTAW PROCESS WITH FILLER METAL W/ WPS: T-234. 1
8. REPEAT STEP 6.
9. ROLL TUBES INTO TEST BLOCK PER DETAIL ABOVE.
10. REPEAT STEP 6.

NO.	DATE	REVISIONS
1	7/15/22	REV. PER CUST. GD/DD

TUBE WELDING MOCK-UP

DWN. BY: EMG
DATE: 4-27-2022
CKD. BY: DiCarlo

Fabsco
SHELL & TUBE, LLC

DWG.NO.: S21-13258-3-4B
REV.: 1

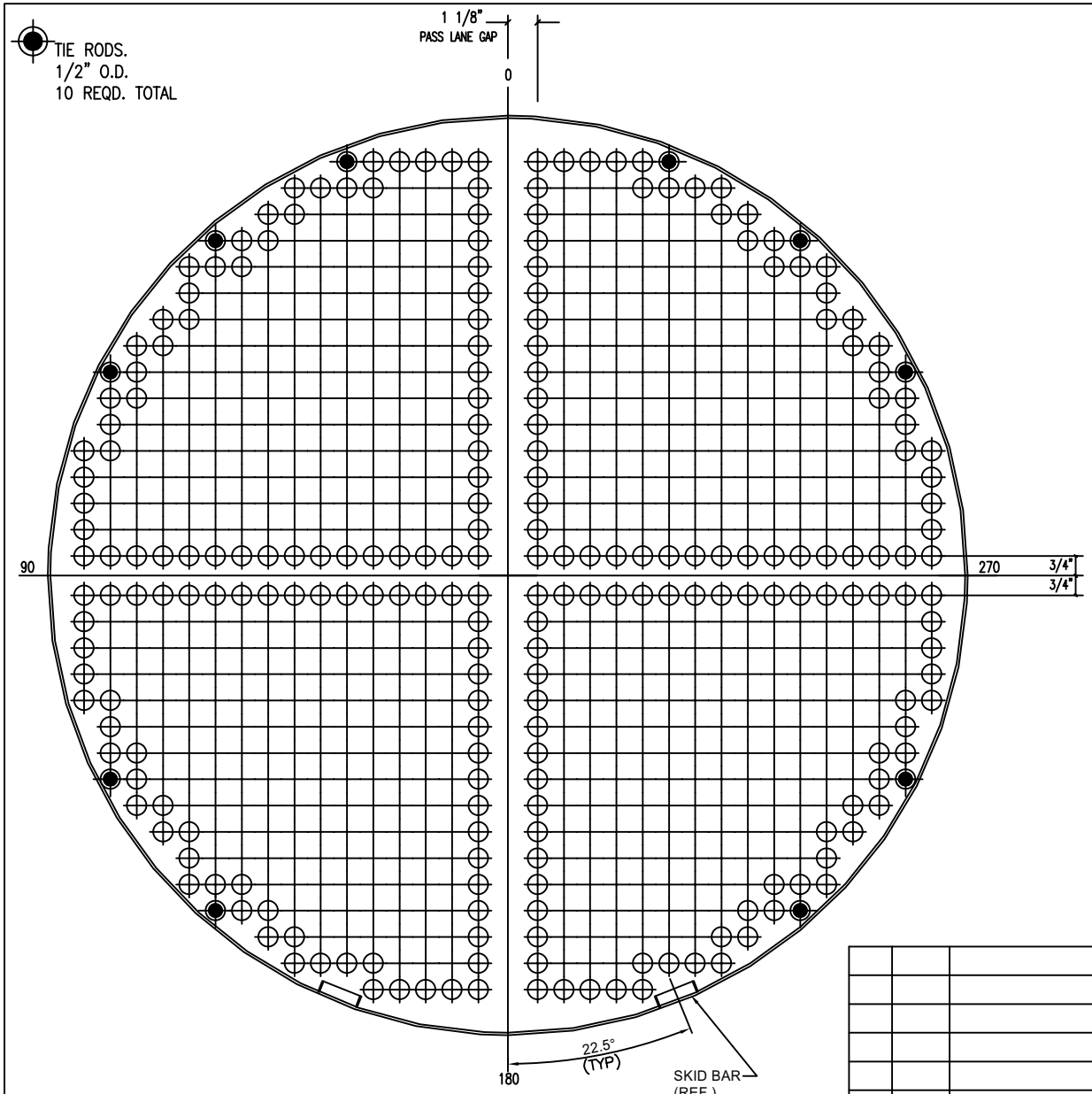

VIEW LOOKING AT SHELL SIDE OF NO. 19 TUBESHEET

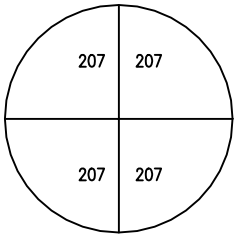

TUBE DISTRIBUTION

NOTES:

1) DRILL AND REAM TUBE HOLES IN TUBESHEETS TO 0.7600" +- 0.0020" DIA. FOR 414 - 3/4" O.D. U-TUBES. TOTAL HOLES = 828
2) TUBE PITCH = 1" SQUARE.
3) NUMBER OF PASSES = 4
4) SEE DRAWING -4A FOR TUBE GROOVING DETAILS.
5) BAFFLE O.D. = 34 13/16"
6) O.T.L. = 34 9/16"

PROJECT NAME: WORLD ENERGY RENEWABLES PROJECT
EQUIPMENT OWNER: AIR PRODUCTS MANUFACTURING LLC
SERVICE: DIESEL PRODUCT MP STEAM GENERATOR
LOCATION: WORLD ENERGY, PARAMOUNT, CA. USA
PRODUCT: DIESEL PRODUCT / MP STEAM
ITEM NO.: 18-X-358
AIR PRODUCTS P.O. NO.: 4505600056 / A8KM-4-402-PO-1
AP PROJECT NO: EN-20-7119
VDR CODE NO.: BE04
SERIAL NO.: S21-13258-3
ENGINEER: SD
CUSTOMER / CLIENT: WORLD ENERGY PARAMOUNT

NO.	DATE	REVISIONS

TUBE LAYOUT

DWN. BY	EMG
DATE	4-25-2022
CKD. BY	GS

Fabsco
SHELL & TUBE, LLC

DWG.NO.	REV.
S21-13258-3-5	0

ROW	NO.OF TUBES	BEND RADIUS	BEND DIAMETER	BEND LENGTH	STRAIGHT LENGTH	CUT LENGTH	DEVELOPED LENGTH
A	32	1 1/8"	2 1/4"	0'-3 9/16"	18'-0"	18'-1 1/2"	36'-3 9/16"
B	32	2 1/8"	4 1/4"	0'-6 11/16"	18'-0"	18'-2 1/2"	36'-6 11/16"
C	32	3 1/8"	6 1/4"	0'-9 7/8"	18'-0"	18'-3 1/2"	36'-9 7/8"
D	32	4 1/8"	8 1/4"	1'-1"	18'-0"	18'-4 1/2"	37'-1"
E	32	5 1/8"	10 1/4"	1'-4 1/8"	18'-0"	18'-5 1/2"	37'-4 1/8"
F	30	6 1/8"	12 1/4"	1'-7 1/4"	18'-0"	18'-6 1/2"	37'-7 1/4"
G	30	7 1/8"	14 1/4"	1'-10 7/16"	18'-0"	18'-7 1/2"	37'-10 7/16"
H	30	8 1/8"	16 1/4"	2'-1 9/16"	18'-0"	18'-8 1/2"	38'-1 9/16"
J	28	9 1/8"	18 1/4"	2'-4 11/16"	18'-0"	18'-9 1/2"	38'-4 11/16"
K	26	10 1/8"	20 1/4"	2'-7 13/16"	18'-0"	18'-10 1/2"	38'-7 13/16"
L	24	11 1/8"	22 1/4"	2'-11"	18'-0"	18'-11 1/2"	38'-11"
M	24	12 1/8"	24 1/4"	3'-2 1/8"	18'-0"	19'-0 1/2"	39'-2 1/8"
N	20	13 1/8"	26 1/4"	3'-5 1/4"	18'-0"	19'-1 1/2"	39'-5 1/4"
O	18	14 1/8"	28 1/4"	3'-8 3/8"	18'-0"	19'-2 1/2"	39'-8 3/8"
P	14	15 1/8"	30 1/4"	3'-11 9/16"	18'-0"	19'-3 1/2"	39'-11 9/16"
Q	10	16 1/8"	32 1/4"	4'-2 11/16"	18'-0"	19'-4 1/2"	40'-2 11/16"

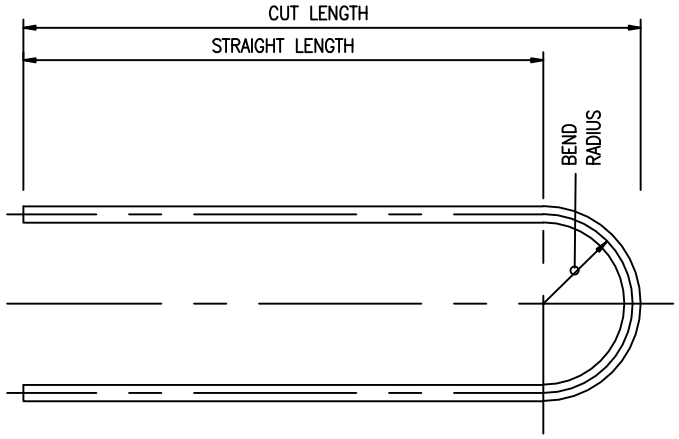

TOTAL NO. REQUIRED: 414
SIZE: 3/4" O.D. X 0.083" MIN. WALL
MATERIAL: SA-179

△2 STRESS RELIEF ANNEAL U-BENDS PLUS 1'-0" OF STRAIGHT LGTH.
@ 1300° F. +0°F-25°F FOR 15 SECONDS MAX. BY ELECTRIC RESISTANCE METHOD.

MAXIMUM OUT-OF-ROUNDNESS OF TUBES AT U-BENDS NOT TO EXCEED 10%.

QUANTITIES SHOWN ARE FOR
ONE SET OF U-TUBES,
1 -SET REQ'D. TOTAL.

PROJECT NAME: WORLD ENERGY RENEWABLES PROJECT
EQUIPMENT OWNER: AIR PRODUCTS MANUFACTURING LLC
SERVICE: DIESEL PRODUCT MP STEAM GENERATOR
LOCATION: WORLD ENERGY, PARAMOUNT, CA. USA
PRODUCT: DIESEL PRODUCT / MP STEAM
ITEM NO.: 18-X-358
AIR PRODUCTS P.O. NO.: 4505600056 / A8KM-4-402-PO-1
AP PROJECT NO: EN-20-7119
VDR CODE NO.: BE04
SERIAL NO.: S21-13258-3
ENGINEER: SD
CUSTOMER / CLIENT: WORLD ENERGY PARAMOUNT

NO.	DATE	REVISIONS
△2	7/28/2022	REV./CUST. COMMENTS EMG
△1	7/15/22	NO REV., RESUBMIT FOR APP'L

TUBE BENDING SCHEDULE

DWN. BY: EMG
DATE: 4-25-2022
CKD. BY: SG

Fabsco
SHELL & TUBE, LLC

DWG.NO.: S21-13258-3-6
REV.: 2

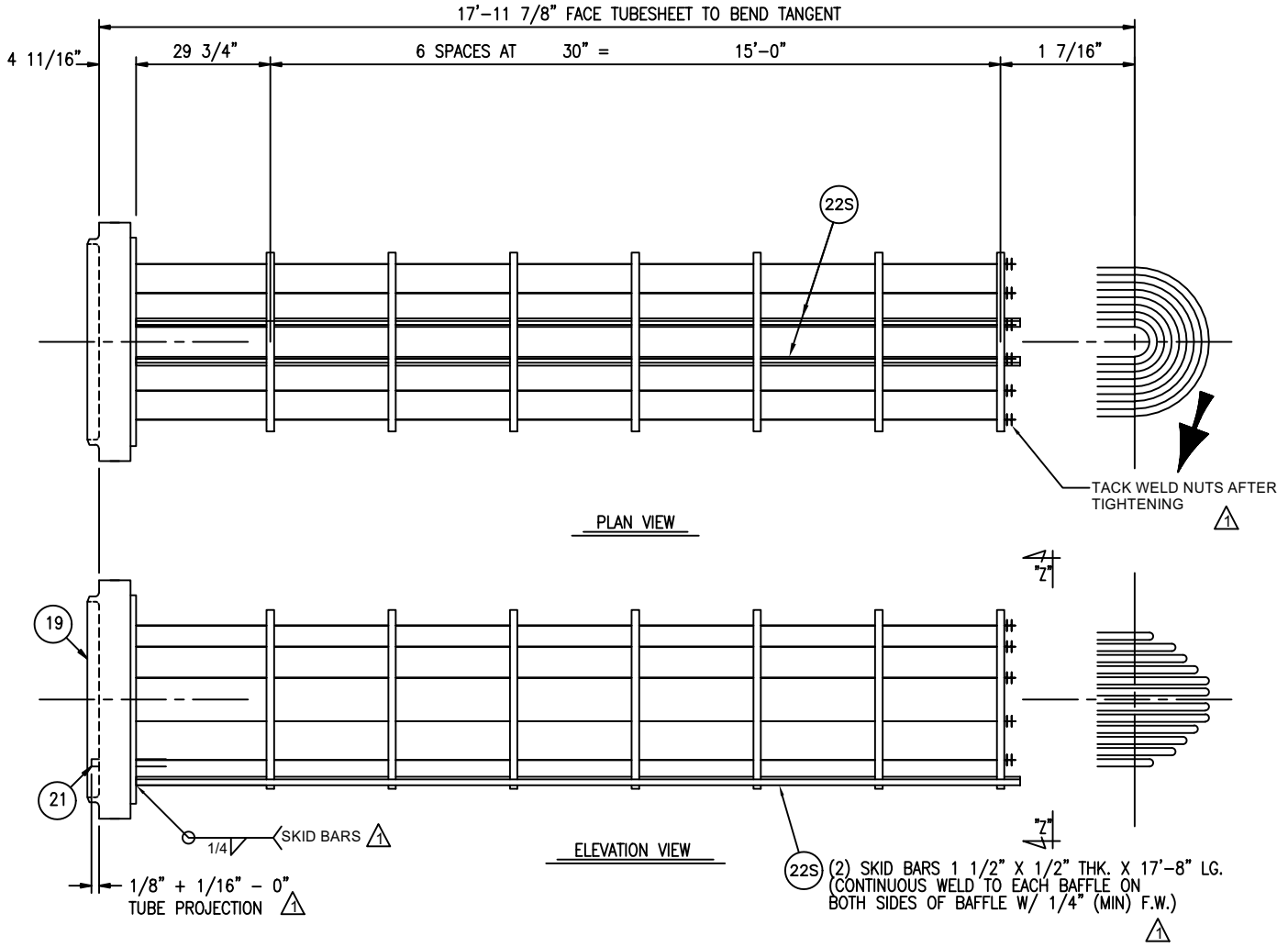

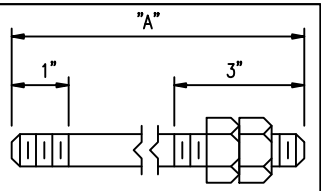

MAT'L. SA-36

1/2" -13 NC O.D. TIE RODS (23)

	REQ'D.	"A"
1	10	17'-8 1/4"
2		
3		
4		

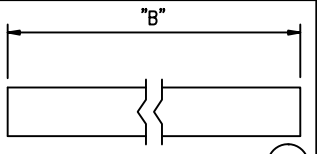

MAT'L. SA-214

3/4" O.D. SPACER TUBING

	REQ'D.	"B"
A	10	29 7/16"
B	32	29 3/8"
C		
D		
E		
F		
G		

NOTES:

1) FOR SECTION AND VIEW DETAILS SEE DWG. 8
2) STRENGTH WELD TUBES TO TUBESHEET USING WELD PROC.: T-234 1
3) WELD SKID BARS TO TUBEHSEET USING WELD PROC.: M-138 1

PROJECT NAME: WORLD ENERGY RENEWABLES PROJECT
EQUIPMENT OWNER: AIR PRODUCTS MANUFACTURING LLC
SERVICE: DIESEL PRODUCT MP STEAM GENERATOR
LOCATION: WORLD ENERGY, PARAMOUNT, CA. USA
PRODUCT: DIESEL PRODUCT / MP STEAM
ITEM NO.: 18-X-358
AIR PRODUCTS P.O. NO.: 4505600056 / A8KM-4-402-PO-1
AP PROJECT NO: EN-20-7119
VDR CODE NO.: BE04
SERIAL NO.: S21-13258-3
ENGINEER: SD
CUSTOMER / CLIENT: WORLD ENERGY PARAMOUNT

NO.	DATE	REVISIONS
2	8/29/22	NO REV. RESUBMIT FOR APP'L DD/DG
1	7/15/22	REV. PER CUST. GD/DD

BUNDLE DETAILS

DWN. BY: EMG
DATE: 4-25-2022
CKD. BY: GS

Fabsco
SHELL & TUBE, LLC

DWG.NO.: S21-13258-3-7
REV.: 2

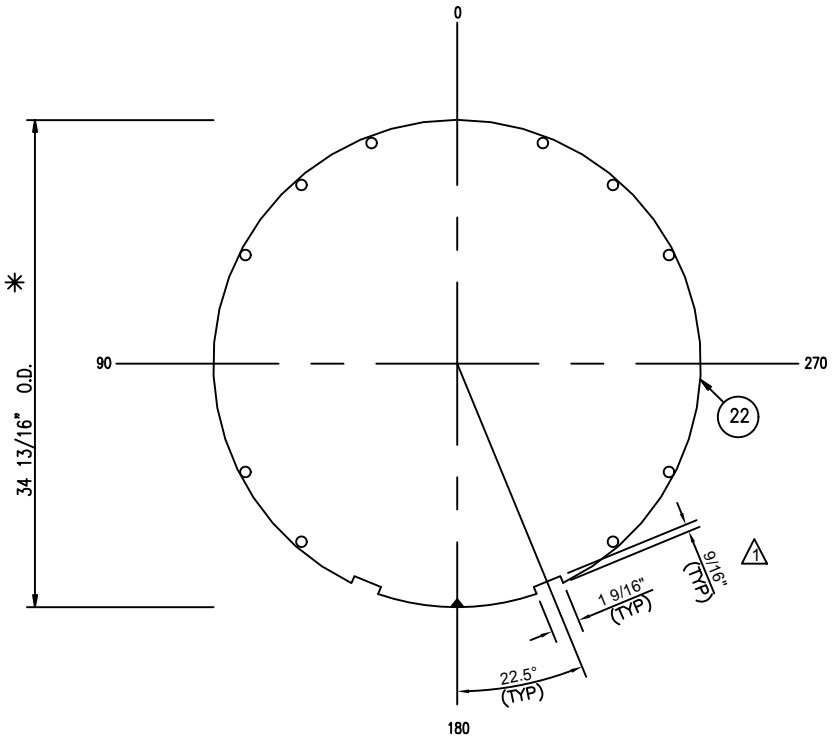

VIEW ZZ OF BAFFLES

5/8" THK. 1

7 -REQD. FULL DIA.

MATERIAL: SA-516-70

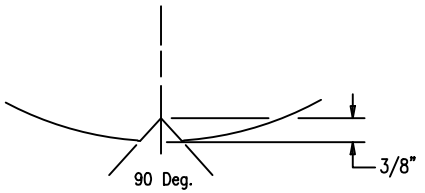

NOTCH DETAIL

PROJECT NAME: WORLD ENERGY RENEWABLES PROJECT
EQUIPMENT OWNER: AIR PRODUCTS MANUFACTURING LLC
SERVICE: DIESEL PRODUCT MP STEAM GENERATOR
LOCATION: WORLD ENERGY, PARAMOUNT, CA. USA
PRODUCT: DIESEL PRODUCT / MP STEAM
ITEM NO.: 18-X-358
AIR PRODUCTS P.O. NO.: 4505600056 / A8KM-4-402-PO-1
AP PROJECT NO: EN-20-7119
VDR CODE NO.: BE04
SERIAL NO.: S21-13258-3
ENGINEER: SD
CUSTOMER / CLIENT: WORLD ENERGY PARAMOUNT

NOTES:

1) DRILL TUBE HOLES IN BAFFLES 25/32" DIA. & DEBURR.
2) DRILL TIE ROD HOLES 9/16" DIA.
   SEE TUBE LAYOUT FOR LOCATION.
3) RADIUS ALL CORNERS ON BAFFLE CUTS.
* 4) CHECK SHELL PORT I.D. BEFORE MACHINING BAFFLE O.D. 1
5) MACHINE O.D. OF BAFFLES TO 250 RMS.

NO.	DATE	REVISIONS
1	7/15/22	REV. PER CUST. GD/DD

BAFFLE DETAILS

DWN. BY	DWG.NO.	REV.
EMG	S21-13258-3-8	1
DATE: 4-25-2022		
CKD. BY: GS		

Fabsco
SHELL & TUBE, LLC

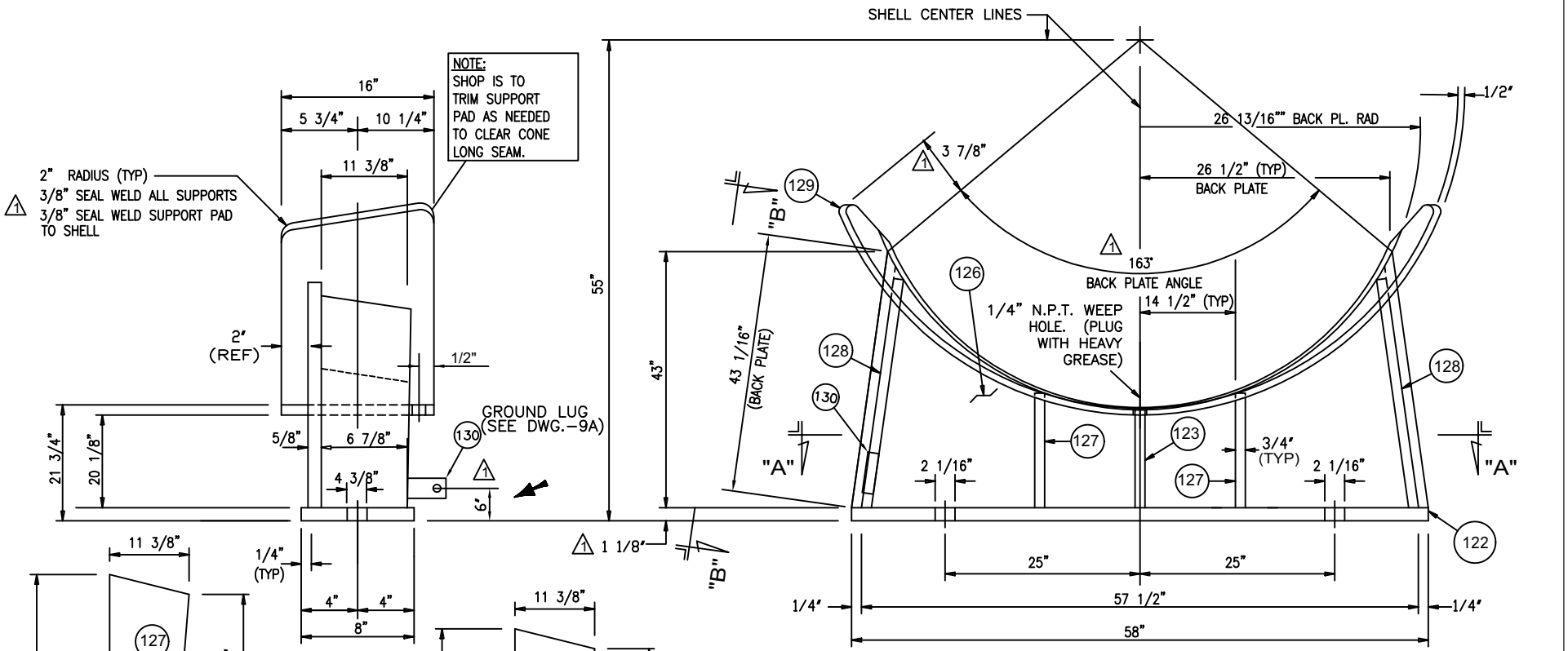

ONE REQUIRED MARKED "Y" W/ (2) 2 1/16" X 4 3/8" LG. SLOTS

PROJECT NAME: WORLD ENERGY RENEWABLES PROJECT
EQUIPMENT OWNER: AIR PRODUCTS MANUFACTURING LLC
SERVICE: DIESEL PRODUCT MP STEAM GENERATOR
LOCATION: WORLD ENERGY, PARAMOUNT, CA. USA
PRODUCT: DIESEL PRODUCT / MP STEAM
ITEM NO.: 18-X-358
AIR PRODUCTS P.O. NO.: 4505600056 / A8KM-4-402-PO-1
AP PROJECT NO: EN-20-7119
VDR CODE NO.: BE04
SERIAL NO.: S21-13258-3
ENGINEER: SD
CUSTOMER / CLIENT: WORLD ENERGY PARAMOUNT

NO.	DATE	REVISIONS
2	8/29/22	SUPT. BUILT, NO REV/FABSCO DD/DG
1	7/15/22	REV. PER CUST. GO/DD

SUPPORT "Y" DETAILS

DWN. BY: EMG
DATE: 4-27-2022
CKD. BY: GS

Fabsco
SHELL & TUBE, LLC

DWG. NO.: S21-13258-3-9
REV.: 2

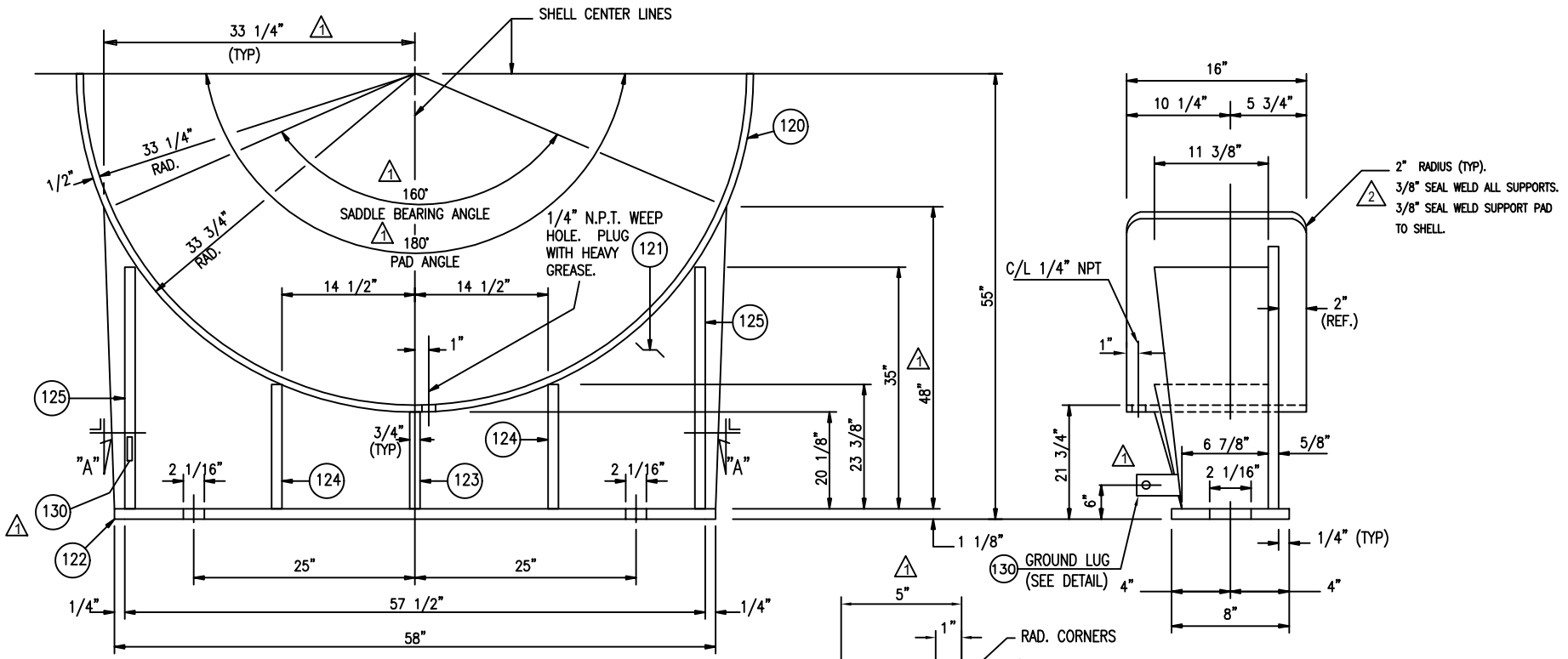

ONE REQUIRED MARKED "X" W/ (2)2 1/16" ROUND HOLES.

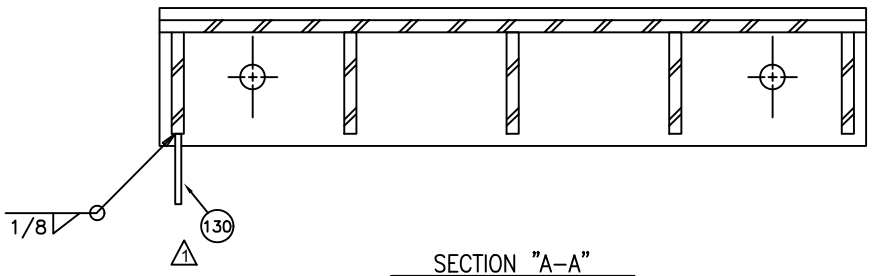

SECTION "A-A"

GROUNDING LUG

(1) REQ'D. FS ON SUPT. MK "X", (1) REQ'D. NS ON SUPT. MK "Y".

1/4" THK.

MATERIAL: SA-240-304

PROJECT NAME: WORLD ENERGY RENEWABLES PROJECT
EQUIPMENT OWNER: AIR PRODUCTS MANUFACTURING LLC
SERVICE: DIESEL PRODUCT MP STEAM GENERATOR
LOCATION: WORLD ENERGY, PARAMOUNT, CA. USA
PRODUCT: DIESEL PRODUCT / MP STEAM
ITEM NO.: 18-X-358
AIR PRODUCTS P.O. NO.: 4505600056 / A8KM-4-402-PO-1
AP PROJECT NO: EN-20-7119
VDR CODE NO.: BE04
SERIAL NO.: S21-13258-3
ENGINEER: SD
CUSTOMER / CLIENT: WORLD ENERGY PARAMOUNT

NO.	DATE	REVISIONS
2	8/29/22	REV. PER CUST. DD/DG
1	7/15/22	REV. PER CUST. GD/DD

"X" SUPPORT DETAILS

DWN. BY: EMG
DATE: 4-27-2022
CKD. BY: GS

Fabsco SHELL & TUBE, LLC

DWG.NO.: S21-13258-3-9A
REV.: 2

* TO BE ASSIGNED AT TIME OF SHIPMENT

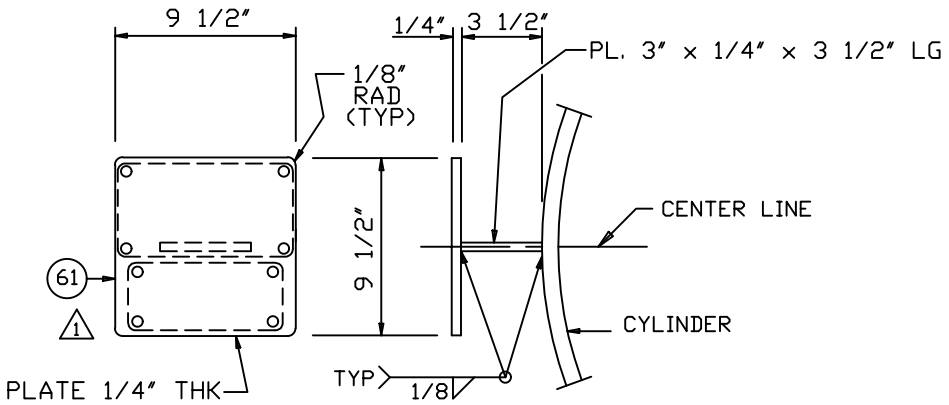

NAME PLATE BRACKET DETAIL

(ONE) REQUIRED SA-516-70N

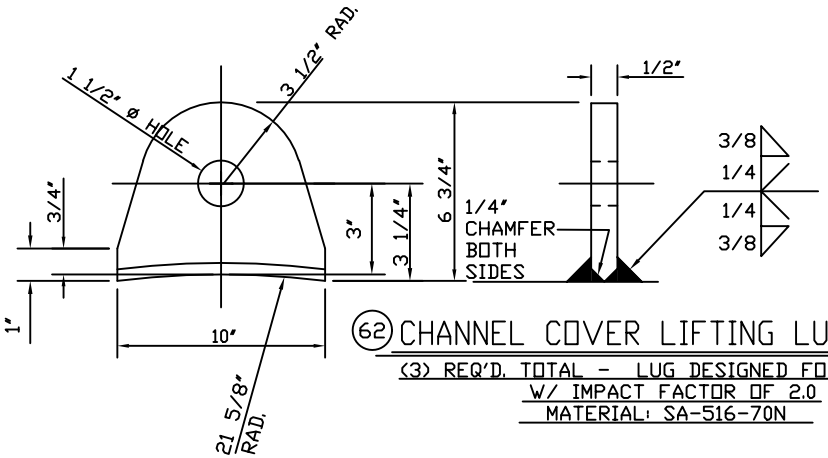

62 CHANNEL COVER LIFTING LUG DETAIL

(3) REQ'D. TOTAL - LUG DESIGNED FOR 17,000 LBS W/ IMPACT FACTOR OF 2.0
MATERIAL: SA-516-70N

MATERIAL: 18-8 STN. STL.(16 GA)

60

NAT'L BD. *

CERTIFIED BY

FABSCO SHELL & TUBE, LLC

SAPULPA, OKLAHOMA

U

RT1-S
RT3-T
HT-S
STEAM

		MAWP		MAWT	
SHELL	556	PSI AT	550	° F.	
		MAEWP		MAWT	
SHELL	15	PSI AT	550	°F.	2
		MDMT		MAWP	
SHELL	32	°F. AT	556	PSI	2
		MAWP		MAWT	
TUBES	436	PSI AT	650	° F.	
		MAEWP		MAWT	
TUBES	15	PSI AT	610	°F.	
		MDMT		MAWP	
TUBES	32	°F. AT	436	PSI	

SERIAL NUMBER	YEAR BUILT	ITEM/TAG NUMBER
S21-13258-3	2023	18-X-358

P.O. NO.: 4505600056 TEST DATE: WT.: 36,900# 2

SERVICE: DIESEL PRODUCT/MP STEAM GENERATOR

INFORMATION NAME PLATE

1 HYDRO TEST PRESS PSIG.,TUBESIDE: SHOP-691/FIELD-594

1 HYDRO TEST PRESS PSIG.,SHELLSIDE: SHOP-826/FIELD-733 2

1 DESIGN PRESS.: SHELLSIDE=550 PSIG; TUBESIDE=425 PSIG 2

1 SECT. VIII, DIV 1, 2021 ED; API-660; TEMA "R"

PROJECT NAME: WORLD ENERGY RENEWABLES PROJECT
EQUIPMENT OWNER: AIR PRODUCTS MANUFACTURING LLC
SERVICE: DIESEL PRODUCT MP STEAM GENERATOR
LOCATION: WORLD ENERGY, PARAMOUNT, CA. USA
PRODUCT: DIESEL PRODUCT / MP STEAM
ITEM NO.: 18-X-358
AIR PRODUCTS P.O. NO.: 4505600056 / A8KM-4-402-PO-1
AP PROJECT NO: EN-20-7119
VDR CODE NO.: BE04
SERIAL NO.: S21-13258-3
ENGINEER: SD
CUSTOMER / CLIENT: WORLD ENERGY PARAMOUNT

NO.	DATE	REVISIONS	
2	8/29/22	REV. PER CUST. COMMENTS	DD/DG
1	7/14/22	REV. PER CUST. COMMENTS	G.D./DD

NAME PLATE, BRACKET AND LIFTING LUG DETAIL

DWN. BY EMG
DATE 4-26-2022
CKD. BY GS

Fabsco SHELL & TUBE, LLC

DWG. NO. S21-13258-3-10
REV. 2

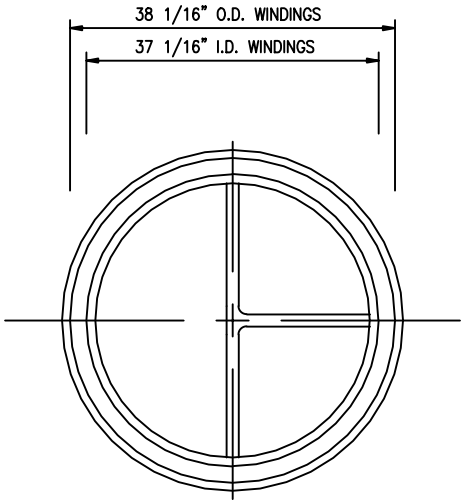

(1)–REQUIRED.
CHANNEL COVER GASKET.
0.175" THK. 304 S.S. SPIRAL WOUND
W/ GRAPHITE FILLER & INNER / OUTER COMP. RINGS (A)
RIB TO BE 3/16" THK. X 7/16" WIDE 304 S.S. DBL. JACKETED △1
W/ GRAPHITE FILLER AND 1/64" THK. GRAPHITE
FACE ON BOTH SIDES
TEST PRESSURE: 691 PSIG △1

CHANNEL COVER TO CHANNEL FLANGE BOLTING INFO
STUD DIAMETER: 1 1/4" O.D.
NUMBER STUDS: (40)
STUD MATERIAL: SA-193-B7
BOLT TORQUE RANGE TO BE ACHIEVED: 1201.9 - 1385 FT-LBS △1

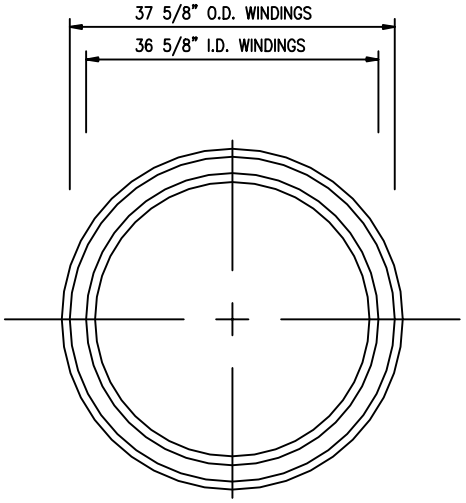

(1)–REQUIRED.
SHELL GASKET.
0.175" THK. 304 S.S. SPIRAL WOUND
W/ GRAPHITE FILLER & INNER / OUTER COMP. RINGS (B)
TEST PRESSURE: 826 PSIG
△1

SHELL FLANGE TO TUBESHEET BOLTING INFO
STUD DIAMETER: 1 1/4" O.D.
NUMBER STUDS: (44)
STUD MATERIAL: SA-193-B7
BOLT TORQUE RANGE TO BE ACHIEVED: 945 - 1072 FT-LBS △1

===== COMPRESSION RINGS =====

(A) 38.8125 O.D. X .1250 THICK: MATERIAL=SA-240-304
36.3125 I.D. X .1250 THICK: MATERIAL=SA-240-304
(B) 38.3750 O.D. X .1250 THICK: MATERIAL=SA-240-304
35.8750 I.D. X .1250 THICK: MATERIAL=SA-240-304

NOTES:

1) QUANTITIES SHOWN FOR ONE SET
(3)–SET REQUIRED TOTAL.
△1 ONE SET OF GASKETS TO BE USED IN EXCH. AND
(2) SPARE SETS TO BE BOXED, MARKED WITH
P.O. & ITEM NO. & SHIPPED WITH EXCHANGER.
2) ALL RADII TO BE 1/4"

PROJECT NAME: WORLD ENERGY RENEWABLES PROJECT
EQUIPMENT OWNER: AIR PRODUCTS MANUFACTURING LLC
SERVICE: DIESEL PRODUCT MP STEAM GENERATOR
LOCATION: WORLD ENERGY, PARAMOUNT, CA. USA
PRODUCT: DIESEL PRODUCT / MP STEAM
ITEM NO.: 18–X–358
AIR PRODUCTS P.O. NO.: 4505600056 / A8KM–4–402–PO–1
AP PROJECT NO: EN–20–7119
VDR CODE NO.: BE04
SERIAL NO.: S21–13258–3
ENGINEER: SD
CUSTOMER / CLIENT: WORLD ENERGY PARAMOUNT

NO.	DATE	REVISIONS
△1	7/14/22	REV. PER CUST. COMMENTS G.D./DD

GASKET DETAILS

DWN. BY: EMG
DATE: 4–25–2022
CKD. BY: GS

Fabsco
SHELL & TUBE, LLC

DWG.NO.: S21–13258–3–11
REV.: 1

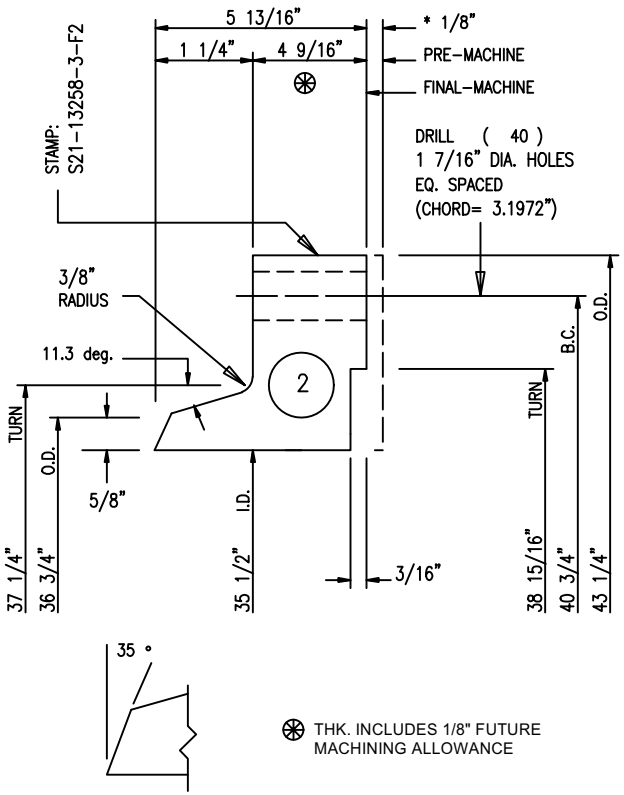

2 GIRTH FLANGE (ONE)REQ'D.

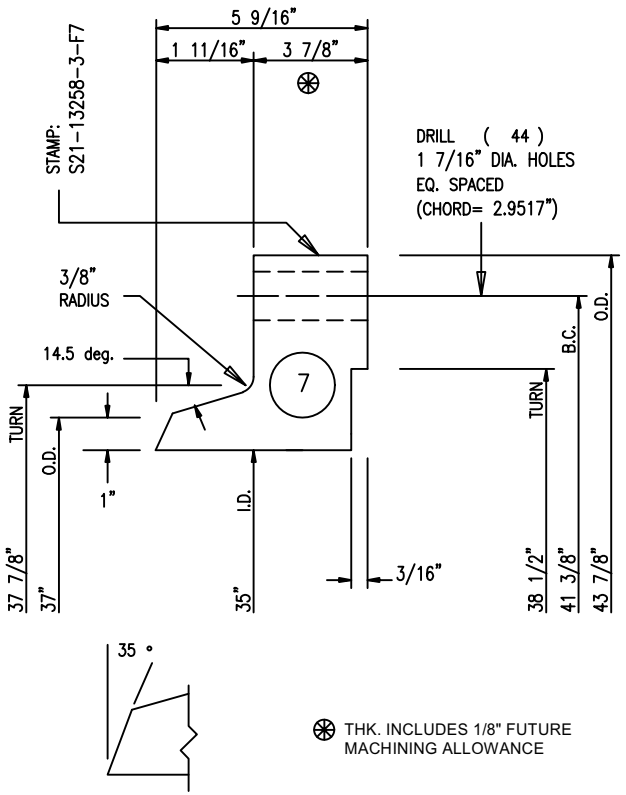

7 GIRTH FLANGE (ONE)REQ'D.

PROJECT NAME: WORLD ENERGY RENEWABLES PROJECT
EQUIPMENT OWNER: AIR PRODUCTS MANUFACTURING LLC
SERVICE: DIESEL PRODUCT MP STEAM GENERATOR
LOCATION: WORLD ENERGY, PARAMOUNT, CA. USA
PRODUCT: DIESEL PRODUCT / MP STEAM
ITEM NO.: 18-X-358
AIR PRODUCTS P.O. NO.: 4505600056 / A8KM-4-402-PO-1
AP PROJECT NO: EN-20-7119
VDR CODE NO.: BE04
SERIAL NO.: S21-13258-3
ENGINEER: SD
CUSTOMER / CLIENT: WORLD ENERGY PARAMOUNT

NOTES:

1) MACHINE ALL SURFACES TO 250 RMS
   EXCEPT GASKET SURFACES MACHINE TO 125 RMS.
2) ALL BOLT HOLES TO STRADDLE NATURAL CENTER LINES.
3) * FINAL MACHINE FACING AFTER FINAL WELDING.

NO.	DATE	REVISIONS
1	7/14/22	NO REV. RESUBMIT FOR APPL G.O./DD

GIRTH FLANGES

DWN. BY: EMG
DATE: 4-25-2022
CKD. BY: GS

Fabsco
SHELL & TUBE, LLC

DWG.NO. S21-13258-3-12
REV. 1

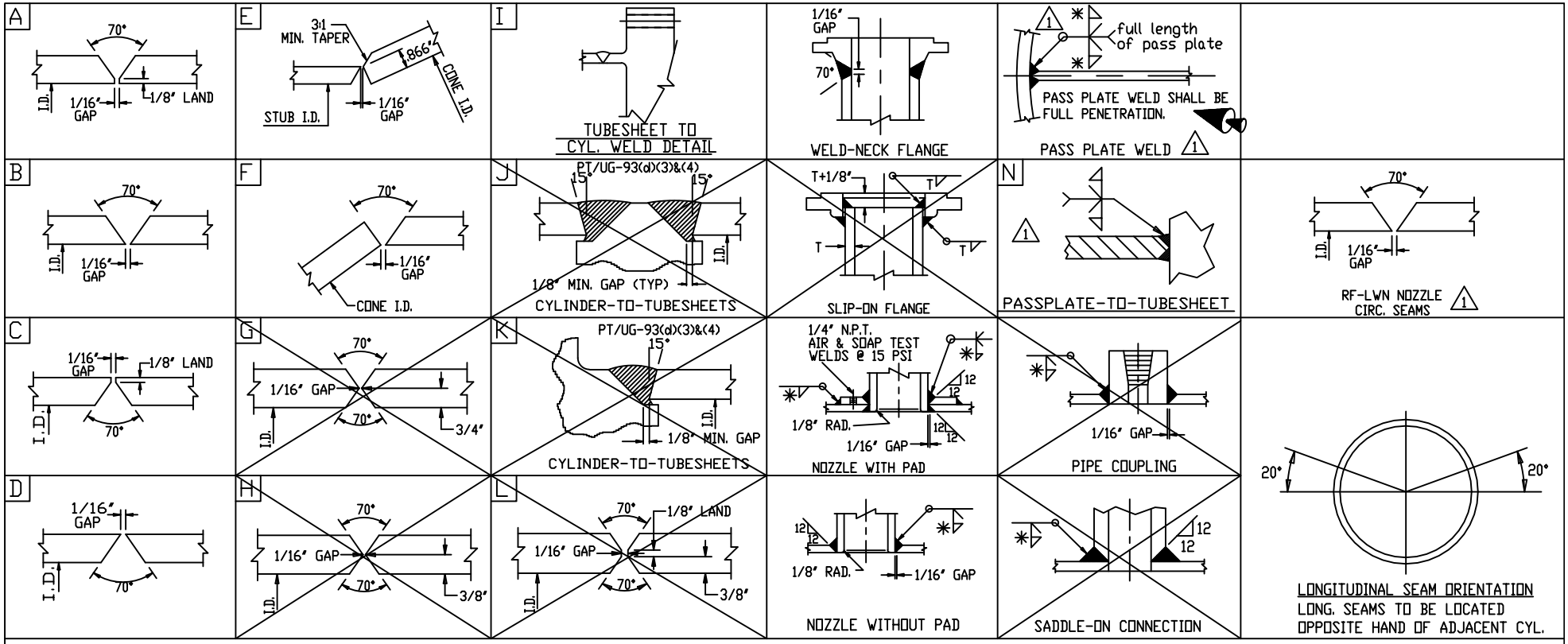

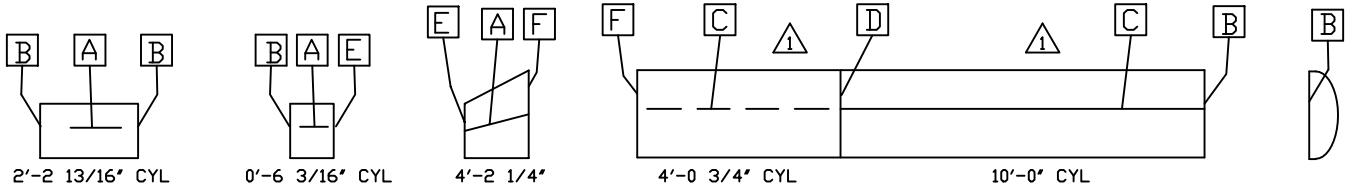

PROJECT NAME: WORLD ENERGY RENEWABLES PROJECT
EQUIPMENT OWNER: AIR PRODUCTS MANUFACTURING LLC
SERVICE: DIESEL PRODUCT MP STEAM GENERATOR
LOCATION: WORLD ENERGY, PARAMOUNT, CA. USA
PRODUCT: DIESEL PRODUCT / MP STEAM
ITEM NO.: 18-X-358
AIR PRODUCTS P.O. NO.: 4505600056 / A8KM-4-402-PO-1
AP PROJECT NO: EN-20-7119
VDR CODE NO.: BE04
SERIAL NO.: S21-13258-3
ENGINEER: SD
CUSTOMER / CLIENT: WORLD ENERGY PARAMOUNT

GENERAL NOTES:

1) ALL WELDING SHALL BE IN ACCORDANCE WITH ASME CODE (SECTION IX).
2) ALL FILLET WELDS SHALL BE 3/8", UNLESS NOTED OTHERWISE ON DETAIL DRAWINGS. (2)
3) LIFTING LUGS SHALL HAVE A 3/8" CONTINUOUS FILLET WELD, UNLESS NOTED OTHERWISE.
4) NOZZLE PADS SHALL BE UT OR RT 100% IF SPLIT IS WITHIN 45° OF VESSEL LONGITUDINAL AXIS.

NO.	DATE	REVISIONS
2	8/29/22	REV. PER CUST. COMMENTS DD/DG
1	7/14/22	REV. PER CUST. & FABSCO G.D./DD

WELD & BEVEL DETAILS

DWN. BY: EMG
DATE: 4-25-2022
CKD. BY: GS

Fabsco SHELL & TUBE, LLC

DWG.NO. S21-13258-3-13
REV. 2