EQUIPROMEX®

# EXPEDIENTE DE DATOS

## FABRICANTE


***Equipos de Proceso Mexicanos, S.A. de C.V.***

***Km. 9.5 carretera Guadalajara-Ameca, municipio de Tala, Jalisco, México, CP 45300, Tel. (384)690 1000***

*www.equipromex.com*


| | |
|---|---|
| CUSTOMER | DESMET BALLESTRA GROUP |
| EQUIPMENT | OIL/WATER SEPARATOR |
| ITEM | W532C.1 |
| W.O. | 2744 |

# 9. DRAWINGS

ACCORDING THE LAW OUR SURVEYS AND DRAWINGS ARE OUR EXCLUSIVE PROPERTY AND MAY NOT BE REPRODUCED, NOR COMMUNICATED TO A THIRD PARTY, NOR USED FOR CONSTRUCTIONS WITHOUT OUR WRITTEN CONSENT

DE CONFORMIDAD CON LA LEY, NUESTROS ESTUDIOS Y DIBUJOS SON PROPIEDAD EXCLUSIVA DE NUESTRA FIRMA Y NO PUEDEN SER REPRODUCIDOS NI COMUNICADOS A TERCEROS, SIN NUESTRA AUTORIZACION ESCRITA, NI USADOS PARA HACER OBRAS HAYAN SIDO MODIFICADOS

CONFORMEMENT A LA LOI NOS ETUDES ET DESSINS SONT NOTRE PROPRIETE EXCLUSIVE, ILS NE PEUVENT ETRE REPRODUITS OU COMMUNIQUES A TIERS SANS NOTRE ACCORD ECRIT NI UTILISES POUR DES TRAVAUX AYANT ETE MODIFICATIONS SANS NOTRE AUTORISATION ECRITE

IF IN DOUBT, ASK – DO NOT SCALE !

## ELEVATION LOOKING SOUTH

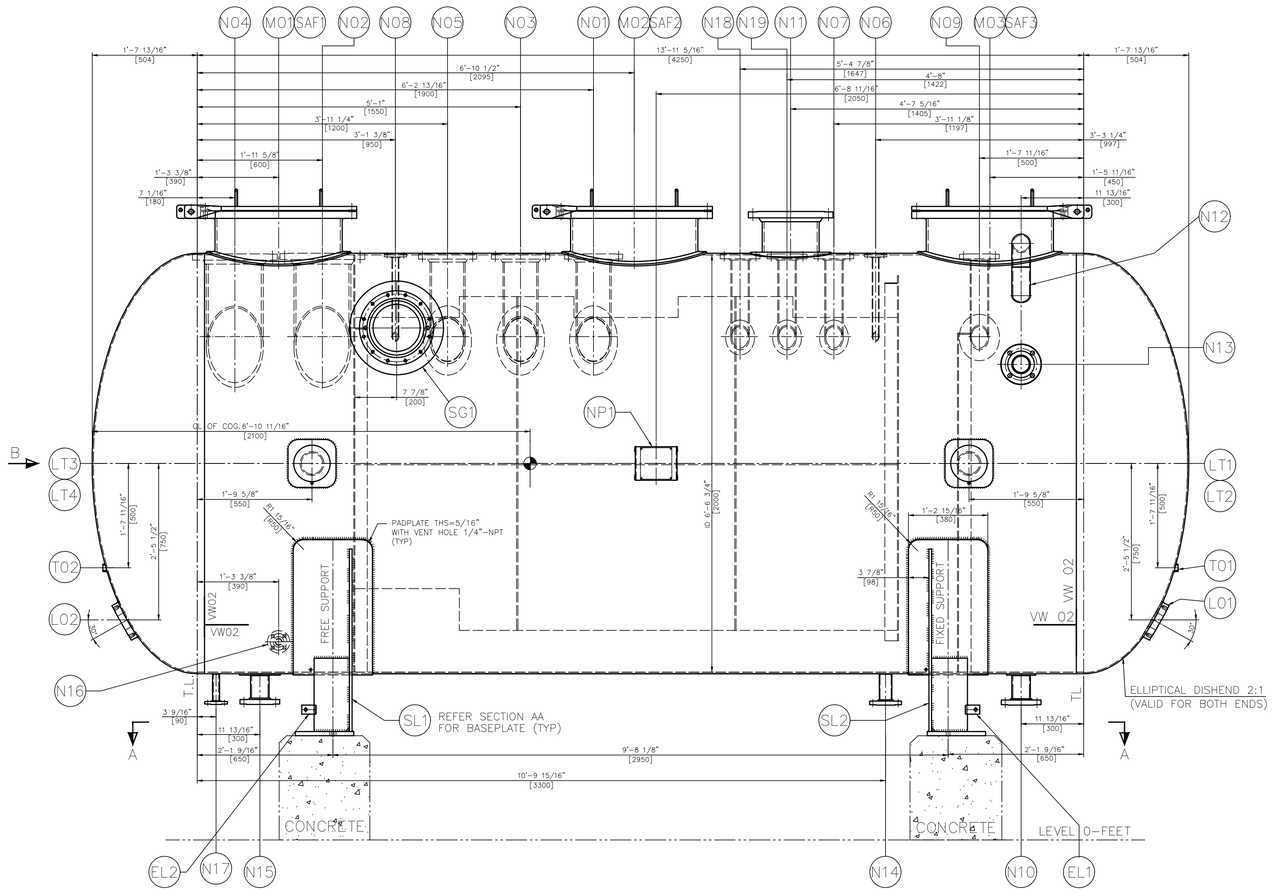


## SIDE VIEW B LOOKING WEST

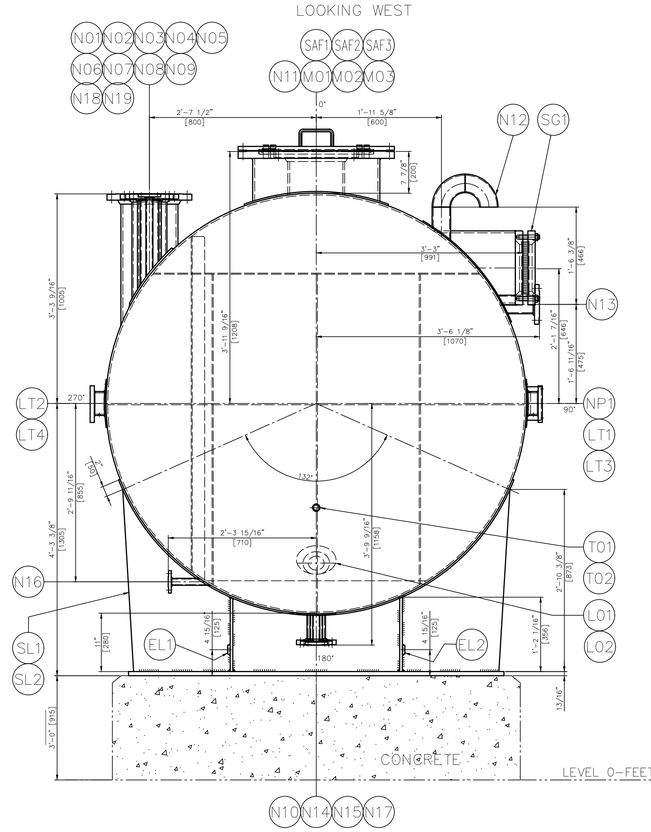


## PLAN

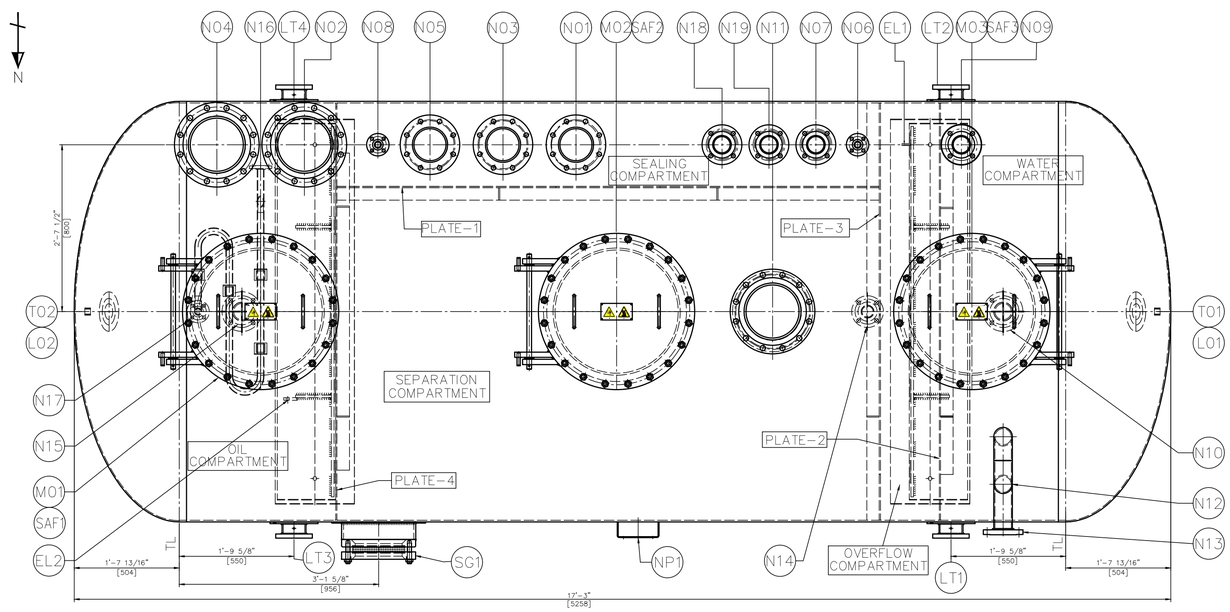


## DETAIL TRUNNION (LT1–LT4)

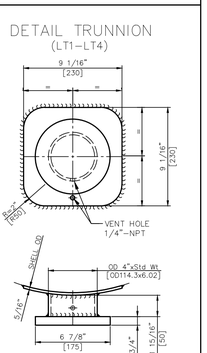


## SECTION AA DETAIL FOR SUPPORT BASEPLATE

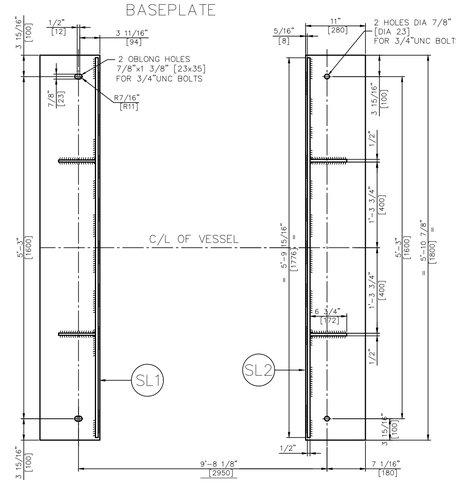


WARNING SIGN PLATE (TYPE-6) DIRECTLY RIVETED ON ACCESS OPENING DOOR (M01–M03) WITHOUT SUPPORT

## NOZZLES

| POS. | SERVICE | QTY | NOMINAL DIA | FLANGE RATING | FLANGE TYPE | SCHED/ THK | REINF. PAD O.D x THK | PROJ. LENGTH | REMARKS REF. DRG | WELD TYPE |
|---|---|---|---|---|---|---|---|---|---|---|
| N01 | INLET FROM W518W1 (HEAVY) | 1 | 6" | CLASS 150 | SORF | SCH 40S | 9 1/16"x5/16" | 5"-3 9/16" | – | FW02/NW11 |
| N02 | INLET FROM W518W1 (SOLID) | 1 | 10" | CLASS 150 | SORF | SCH 40S | | 5"-3 9/16" | – | FW02/NW01 |
| N03 | INLET FROM W518W2 (HEAVY) | 1 | 6" | CLASS 150 | SORF | SCH 40S | 9 1/16"x5/16" | 5"-3 9/16" | – | FW02/NW11 |
| N04 | INLET FROM W518W2 (SOLID) | 1 | 10" | CLASS 150 | SORF | SCH 40S | | 5"-3 9/16" | – | FW02/NW01 |
| N05 | INLET FROM W518W/No (HEAVY) | 1 | 6" | CLASS 150 | SORF | SCH 40S | 9 1/16"x5/16" | 5"-3 9/16" | – | FW02/NW11 |
| N06 | INLET FROM P532W | 1 | 1" | CLASS 150 | SORF | SCH 40S | – | 5"-3 9/16" | – | FW02/NW01 |
| N07 | INLET FROM PW578CIP | 1 | 3" | CLASS 150 | SORF | SCH 10S | 5 1/2"x1/4" | 5"-3 9/16" | – | FW02/NW10 |
| N08 | INLET FROM PW532C | 1 | 1" | CLASS 150 | SORF | SCH 40S | – | 5"-3 9/16" | – | FW02/NW03 |
| N09 | OVERFLOW FROM W578HW | 1 | 4" | CLASS 150 | SORF | SCH 10S | 7 11/16"x1/4" | 5"-3 9/16" | – | FW02/NW10 |
| N10 | WATER OUTLET TO PW532W | 1 | 3" | CLASS 150 | SORF | SCH 10S | 5 1/2"x1/4" | 5"-3 9/16" | – | FW02/NW10 |
| N11 | VENT TO COLLECTION HEADER | 1 | 10" | CLASS 150 | SORF | SCH 40S | 11"-3 3/16"x5/16" | 5"-11 9/16" | 006 | FW02/NW10 |
| N12 | SYPHON VENT TO ATM | 1 | 3" | – | – | SCH 10S | – | – | – | NW03 |
| N13 | WATER OVERFLOW TO ETP | 1 | 3" | CLASS 150 | SORF | SCH 10S | 5 1/2"x1/4" | 7"-4 3/16" | – | FW02/NW11 |
| N14 | DRAIN FROM CENTER COMPARTMENT | 1 | 2" | CLASS 150 | SORF | SCH 40S | – | 5"-3 9/16" | – | FW02/NW01 |
| N15 | OIL OUTLET TO PW532C | 1 | 3" | CLASS 150 | SORF | SCH 10S | 5 1/2"x1/4" | 5"-3 9/16" | – | FW02/NW10 |
| N16 | STEAM INLET TO COIL | 1 | 1" | CLASS 150 | SORF | SCH 40S | – | 5"-3 15/16" | – | NW13/W015 FW02 |
| N17 | CONDENSATE OUTLET | 1 | 1" | CLASS 150 | SORF | SCH 40S | – | 5"-3 9/16" | – | NW13/W015 FW02 |
| N18 | WATER FROM W518N FUNNEL | 1 | 3" | CLASS 150 | SORF | SCH 10S | 5 1/2"x1/4" | 5"-3 9/16" | – | FW02/NW10 |
| N19 | WATER FROM W518W FUNNEL | 1 | 3" | CLASS 150 | SORF | SCH 10S | 5 1/2"x1/4" | 5"-3 9/16" | – | FW02/NW10 |
| L01 | SEAT FOR LEVEL TRANSMITTER | 1 | 3" | CLASS 150 | PAD FLANGE | | | | | NW01/ SEE BODY |
| L02 | SEAT FOR LEVEL TRANSMITTER | 1 | 3" | CLASS 150 | PAD FLANGE | | | | | NW01/ SEE BODY |
| T01 | SEAT FOR TEMPERATURE TRANSMITTER | 1 | 3/4" NPT | CLASS 3000 | HALF COUPLING | | | | | NW01/ SEE BODY |
| T02 | SEAT FOR TEMPERATURE GUAGE | 1 | 3/4" NPT | CLASS 3000 | HALF COUPLING | | | | | NW01 SEE BODY |
| SG1 | SIGHTGLASS MODEL 6 | 1 | 14" | | | SCH 40S | 1"-5 11/16"x5/16" | 5"-3" | 00454364 | NW10 |
| M01/03 | MANHOLE DIA 24" WITH HINGE | 3 | 24" | | | | 2"-0"x3/8" | 2"-3 3/16"x5/16" | 7"-11 9/16" 100212070 | NW11/FW01 |

## ACCESSORIES

| | | | | | | | | | | |
|---|---|---|---|---|---|---|---|---|---|---|
| LT1-LT4 | LIFTING TRUNNIONS | 4 | | | | | | | SEE DETAIL | |
| SL1 SL2 | SUPPORTS | 2 | | | | | | | | |
| NP1 | NAMEPLATE | 1 | | | | | | | 100176336 | |
| SAF1-SAF3 | WARNING PLATE TYPE-6 | 3 | – | – | – | – | – | – | 00430531 | |
| EL1/2 | EARTH LUG | 2 | – | – | – | – | – | – | 00389726 | |

## MATERIALS / CERTIFICATES

| ITEM | MATERIAL | CERT. | ITEM | MATERIAL | CERT. |
|---|---|---|---|---|---|
| SHELL | SA-240 304 | | SUPPORTS PAD PLATE | SA-240 304 | |
| HEADS | SA-240 304 | | SUPPORTS PLATE | SA-36 | |
| NOZZLE NECKS | SA-312 TP304 | | TRUNNIONS PAD PLATE | SA-240 304 | |
| NOZZLE FLANGE | SA-182 F304 | | TRUNNIONS PIPE/PLATE | SA-106 B/SA-36 | |
| MANHOLE NECK | SA-240 304 | | EXTERNAL GASKET | GARLOCK 3500 | |
| MANHOLE FLANGES | SA-240 304 | | INTERNAL BOLTS/NUTS(UNC) | SA-193 B8/SA-194 8 | |
| INTERNALS | SA-240 304 | | EXTERNAL BOLTS/NUTS(UNC) | SA-193 B7/SA-194 2H | |
| INTERNAL COIL | SA-312 316L | | SUPPORT FOR NAMEPLATE | SA-240 304 | |
| INTERNAL COIL FLANGE | SA-182-F316L | | INTERNAL STIFFENERS | SA-240 304 | |
| INTERNAL COIL SUPPORT | SA-240 304 | | RAINF. PADS | SA-240 304 | |
| SIGHTGLASS NECK | SA-312 TP304 | | | | |
| PLATE/PAD PLATE | SA-240 304 | | | | |

## DESIGN DATA

| EQUIPMENT | | | SHELL | COIL |
|---|---|---|---|---|
| PRESSURE | OPERATING | barg | -0.1/ATM (1.45 psig) | 3 (43.5 psig) |
| | DESIGN | barg | +/-0.25 (3.62 psig) | -1/+6 (87.0 psig) |
| | TEST | barg | FILL WITH WATER | 10.8 (157 psig) |
| TEMPERATURE | OPERATING | °C | 90 (194° F) | 143.73 (290.714° F) |
| | DESIGN | °C | 0/120 (248° F) | 193.3 (380° F) |
| | TEST | °C | AMBIENT | AMBIENT |
| MIN. DESIGN METAL TEMP. | | °C | -10 (14° F) | |
| CORROSION ALLOWANCE | STAINLESS STEEL | mm | 0 | 0 |
| | CARBON STEEL | mm | 1/16" (1.6) | 1/16" (1.6) |
| RADIOGRAPHY | | | NONE | SPOT |
| MIN. JOINT EFFICIENCY | | | 0.7 | 0.85 |
| HEAT TREATMENT | | | NONE | |
| DESIGN CODE | | | ASME SEC. VIII DIV.1 Ed:2019 | ASME B31.3 |
| WIND / SEISMIC DESIGN | | | 101 mph / SDS = 1.077g, SD1 = 0.664g (ASCE 7-16) | |
| FLUID | | | WATER + OIL | STEAM |
| FLUID GROUP / CLASS | | | NA | NA |
| PED 2014/68/EU | | | NA | |
| ASME "U" STAMP | | | NA | |
| WEIGHT | EMPTY | kg | 4800 (10582 Lbs) | |
| | ASSEMBLED | kg | 4800 (10582 Lbs) | |
| | INSULATION | kg | 222 (489 Lbs) | |
| | OPERATING | kg | 15863 (34972 Lbs) | |
| | FULL OF WATER | kg | 20222 (44582 Lbs) | |
| VOLUME | | $m^3$ | 15.2 (537 $Ft.^3$) | 0.0015 (0.052 $Ft.^3$) |
| HEAT TRANSFER AREA | | $m^2$ | – | |
| INSULATION | SURFACE AREA / THK. | $m^2$/mm | 37/50 (398.2 $Ft^2$/2") | |
| INSPECTED BY | | | DESMET BALLESTRA | |

NOTES : – LIQUID DENSITY : 879.73 kg/m3 (54.91 Lbs/$Ft.^3$)
– USE SPREADER BEAM FOR LIFTING

| REV. | DATE | DESCRIPTION OF MODIFICATION | NBR OF MOD. | BY |
|---|---|---|---|---|
| 006 | 06.04.2022 | REVISION AS MARKED | | YMS |
| 005 | 06.01.2022 | TRUNNIONS ARE RELOCATED AS SHOWN | | RSS |
| 004 | 12.11.2021 | WARNING PLATE TYPE REVISED-UPDATED AS MARKED | | RSS |
| 003 | 27.10.2021 | INTERNAL STIFFENERS ADDED AND MANHOLES DESIGN CHANGEDTO HINGE TYPE UPDATED AS MARKED | | RSS |
| 002 | 20.09.2021 | ORIENTATION HOLD REMOVED-UPDATED AS PER CLIENT COMMENTS-POS. N11 PADPLATE SIZE REVISED | | RSS |
| 001 | 01.04.2021 | COG. MARKED ON THE DRAWING-UPDATED AS MARKED | | RSS |

Desmet Ballestra Group

DOCUMENT TYPE: ASSY
PROJECT DESCRIPT: WORPAR

| ITEM NBR DISPOSITION | W532C.1 (19-T-750) | SECD | SAA | SCALE | FORMAT |
|---|---|---|---|---|---|
| | | PROC.E | GVK | | A0 |
| DOCUMENT DESCRIPTION | OIL/WATER SEPARATOR | PROJ.M | JCG | | |
| | | DOM | PRA | AUTHOR | RSH/RSS |

V=15.2 D=2000 L=4250 ARRANGEMENT

| DATE | DRAWING NUMBER | REVISION |
|---|---|---|
| 10.03.2021 | 100176337 | 006 |

A0(841 x 1189)

IF IN DOUBT, ASK DO NOT SCALE !

CAD DRWG. DO NOT MODIFY

ACCORDING THE LAW OUR SURVEYS AND DRAWINGS ARE OUR EXCLUSIVE PROPERTY AND MAY NEITHER BE REPRODUCED NOR COMMUNICATED TO THIRD PARTIES EVEN AFTER MODIFICATIONS WITHOUT OUR WRITTEN CONSENT

DE CONFORMIDAD CON LA LEY NUESTROS ESTUDIOS Y DIBUJOS SON PROPIEDAD EXCLUSIVA DE NUESTRA FIRMA Y NO PUEDEN SER REPRODUCIDOS NI COMUNICADOS A TERCERAS PERSONAS SIN NUESTRA AUTORIZACION ESCRITA AUNQUE HAYAN SIDO MODIFICADOS

CONFORMEMENT A LA LOI NOS ETUDES ET DESSINS SONT NOTRE PROPRIETE EXCLUSIVE ET NE PEUVENT ETRE REPRODUITS OU COMMUNIQUES A DES TIERS MEME APRES MODIFICATIONS SANS NOTRE AUTORISATION ECRITE

IF IN DOUBT, ASK – DO NOT SCALE !

## ELEVATION

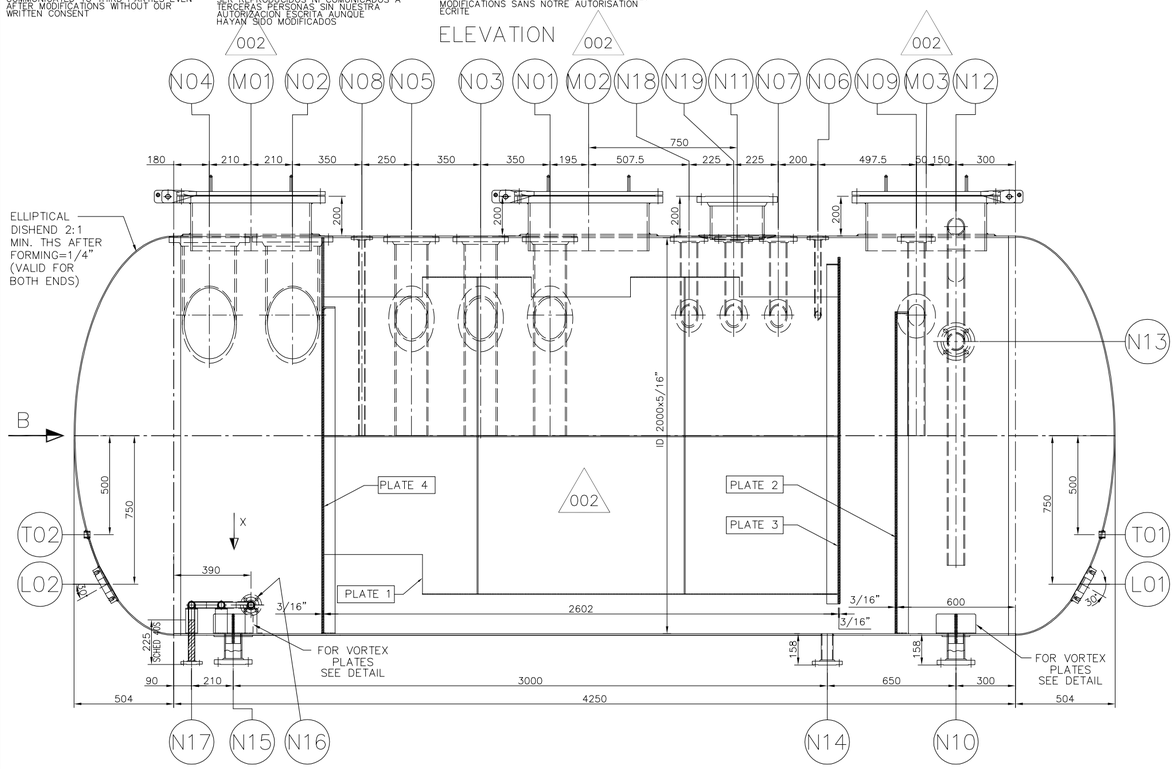


## VIEW B

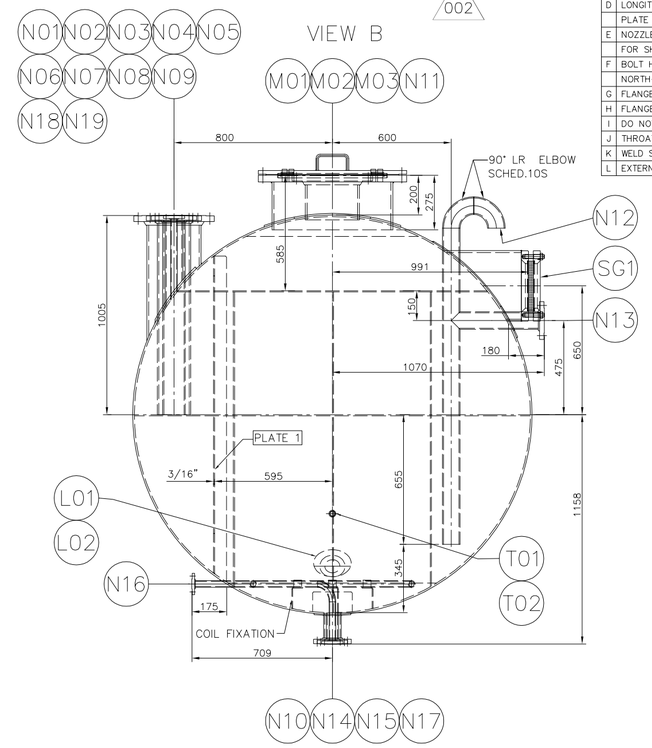


## WORKSHOP INSTRUCTIONS

| | |
|---|---|
| A | ALL DIMENSIONS ARE IN mm, UNLESS OTHERWISE NOTED. |
| B | INDICATED THICKNESS OF HEADS IS THE MINIMUM THICKNESS AFTER FORMING. |
| C | LONGITUDINAL AND CIRCUMFERENTIAL WELDS IN SHELLS AND HEADS SHALL BE FULL PENETRATION BUTT WELDS. |
| D | LONGITUDINAL SEAMS OF ADJACENT SHELL/HEAD COURSES SHALL HAVE A MINIMUM OFFSET OF 5 TIMES THE NOMINAL |
| | PLATE THICKNESS OR 50 mm , WHICHEVER IS GREATER. |
| E | NOZZLE PROJECTIONS FOR HEAD NOZZLES TO BE TAKEN FROM TL; FOR CAP NOZZLES FROM WELD LINE; |
| | FOR SHELL/CONE NOZZLES FROM VESSEL/CONE CENTERLINE; FOR FLAT HEAD VESSELS FROM EXTERNAL SURFACE. |
| F | BOLT HOLES IN VERTICAL FACE FLANGES SHALL STRADDLE THE NATURAL CENTER LINE OF THE VESSEL AND THE |
| | NORTH–SOUTH CENTER LINE FOR HORIZONTAL FACE FLANGES, UNLESS OTHERWISE NOTED. |
| G | FLANGES ≤ 24"ACCORDING TO ASME B16.5 (EN 1092–1);FLANGES > 24"ACCORDING TO ASME B16.47 SERIES B (EN 1092–1). |
| H | FLANGE FACE FINISH: Ra 3.2 – 6.3 µm (125–250 AARH). |
| I | DO NOT ALTER MATERIAL SPECIFICATIONS, UNLESS APPROVED BY DESMET BALLESTRA. |
| J | THROAT SIZE OF FILLET WELDS IS 0.7 TIMES THE SMALLEST JOINING THICKNESS, UNLESS OTHERWISE NOTED. |
| K | WELD SEAMS UNDERNEATH REINFORCING PADS MUST BE GROUND FLUSH,FOLLOWED BY A 100% RT EXAMINATION OF THE SEAM. |
| L | EXTERNAL AND INTERNAL SURFACE PROTECTION AS PER TECHNICAL NOTE TN0001. |

## COIL DETAIL (VIEW–X)

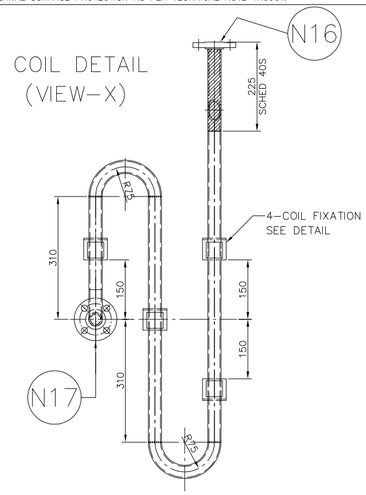


COIL.: PIPE OD 33.4x2.77 (SCHED–10S)
COIL LENGTH : ~2.8 Mtrs.
COIL SURFACE : 0.29 M²
COIL PENETRATION : SEAMLESS PIPE SCHED.40S

## DETAIL PLATE 1 – (THS=3/16")

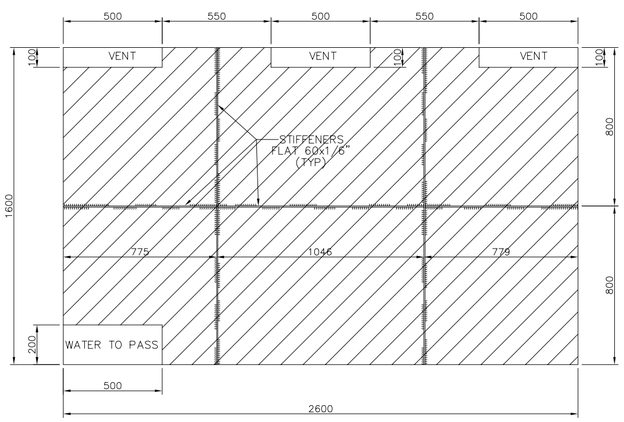


## DETAIL PLATE 2 – (THS=3/16")

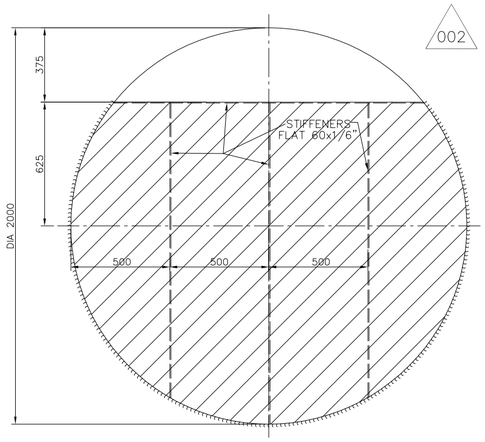


## DETAIL PLATE 3 – (THS=3/16")

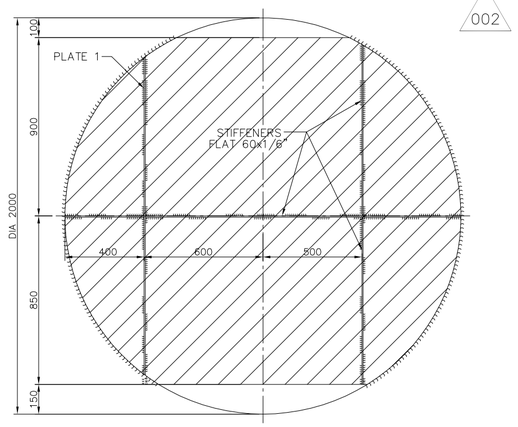


## DETAIL PLATE 4 – (THS=3/16")

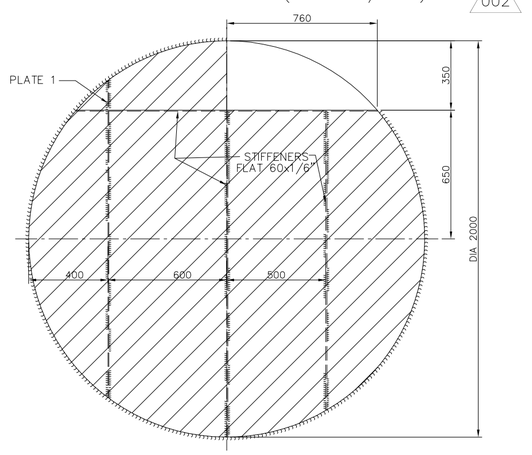


## DETAIL LEVEL TRANSMITTER

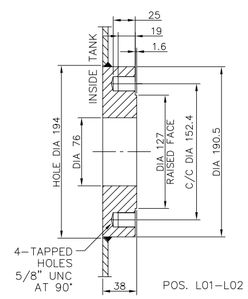


POS. L01–L02

## DETAIL COIL FIXATION

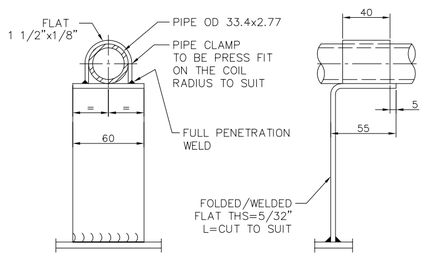


## SEAT FOR TT

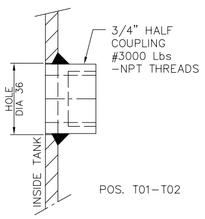


POS. T01–T02

## VORTEX PLATES DETAIL
(FOR POS. N10&N15)

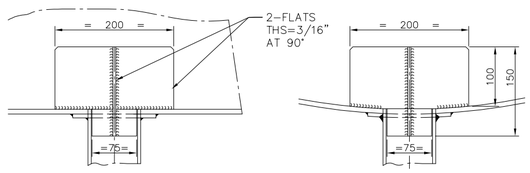


IMPORTANT : INTERNAL SEPARATION PLATES TO BE FULL WELDED TO EACH OTHER/SHELL.

NOTES.
- UNLESS OTHERWISE SPECIFIED, CONSTRUCTION IN SA–240 304.
- FOR ALL OTHER INFORMATION SEE ASSY DRAWING.
- THIS DRAWING IS NOT VALID FOR ORIENTATION.
- EXTERNAL BOLTS/NUTS TO BE GALVANIZED.

| REV | DATE | DESCRIPTION OF MODIFICATION | NBR OF MOD | BY |
|---|---|---|---|---|
| 002 | 27.10.2021 | INTERNAL STIFFENERS ADDED AND MANHOLE DESIGN CHANGED–UPDATED AS MARKED | | RSS |

Desmet Ballestra Group

| | | | | |
|---|---|---|---|---|
| DOCUMENT TYPE | BODY | | | |
| PROJECT DESCRIPT | WORPAR | | | |
| ITEM NBR DISPOSITION | W532C.1 (19–T–750) | SECD | SAA | SCALE / FORMAT |
| | | PROC.E | GVK | A1 |
| DOCUMENT DESCRIPTION | OIL/WATER SEPARATOR | PROJ.M | JCG | |
| | | DOM | PRA | AUTHOR / RSH/RSS |
| V=15.2 D=2000 L=4250 FABRICATION | | DATE | DRAWING NUMBER | REVISION |
| | | 01.04.2021 | 100176338 | 002 |

IF IN DOUBT, ASK DO NOT SCALE ! 1 CAD DRWG. DO NOT MODIFY

A1 (594 x 841)

ACCORDING THE LAW OUR SURVEYS AND DRAWINGS ARE OUR EXCLUSIVE PROPERTY AND MAY NEITHER BE REPRODUCED NOR COMMUNICATED TO THIRD PARTIES EVEN AFTER MODIFICATIONS WITHOUT OUR WRITTEN CONSENT

DE CONFORMIDAD CON LA LEY, NUESTROS ESTUDIOS Y DIBUJOS SON PROPIEDAD EXCLUSIVA DE NUESTRA FIRMA Y NO PUEDEN SER REPRODUCIDOS NI COMUNICADOS A TERCERAS PERSONAS SIN NUESTRA AUTORIZACION ESCRITA AUNQUE HAYAN SIDO MODIFICADOS

CONFOREMENT A LA LOI NOS ETUDES ET DESSINS SONT NOTRE PROPRIETE EXCLUSIVE ET NE PEUVENT ETRE REPRODUITS OU COMMUNIQUES A DES TIERS MEME APRES MODIFICATIONS SANS NOTRE AUTORISATION ECRITE

IF IN DOUBT, ASK – DO NOT SCALE !

# NAMEPLATE

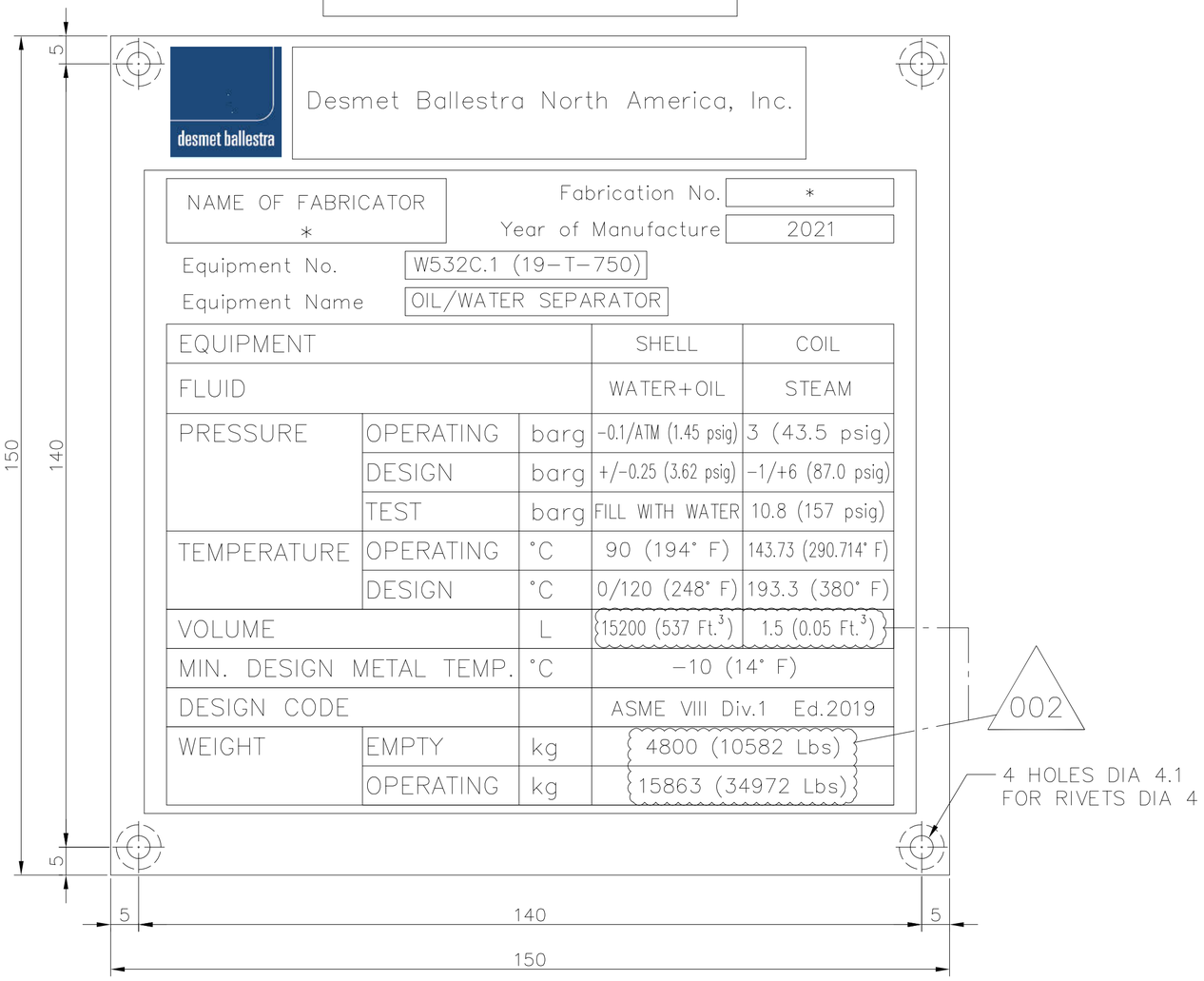


| EQUIPMENT | | | SHELL | COIL |
|---|---|---|---|---|
| FLUID | | | WATER+OIL | STEAM |
| PRESSURE | OPERATING | barg | -0.1/ATM (1.45 psig) | 3 (43.5 psig) |
| | DESIGN | barg | +/-0.25 (3.62 psig) | -1/+6 (87.0 psig) |
| | TEST | barg | FILL WITH WATER | 10.8 (157 psig) |
| TEMPERATURE | OPERATING | °C | 90 (194° F) | 143.73 (290.714° F) |
| | DESIGN | °C | 0/120 (248° F) | 193.3 (380° F) |
| VOLUME | | L | 15200 (537 Ft.$^3$) | 1.5 (0.05 Ft.$^3$) |
| MIN. DESIGN METAL TEMP. | | °C | –10 (14° F) | |
| DESIGN CODE | | | ASME VIII Div.1 Ed.2019 | |
| WEIGHT | EMPTY | kg | 4800 (10582 Lbs) | |
| | OPERATING | kg | 15863 (34972 Lbs) | |

## SUPPORT

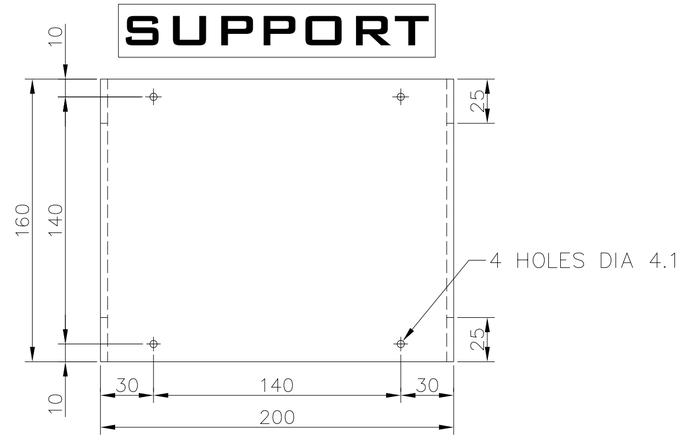


FOR SUPPORT MATERIAL: SEE FABRICATION DRAWING
MINIMUM THICKNESS: 4 mm–SS
5 mm–CS

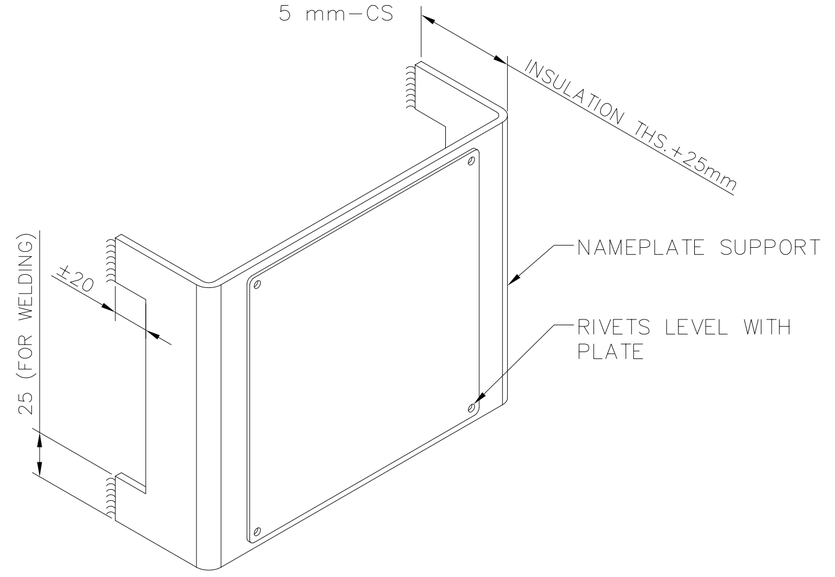


## NOTES:

- CONSTRUCTION PRINTED.
- DIMENSIONS AS INDICATED, MINIMUM THICKNESS OF NAMEPLATE 1 mm.
- THE RECTANGLES, WRITINGS & EDGES HAVE TO BE WRITTEN IN BLACK.
- RECTANGLES & DASHED LINES DELIMIT THE MAXIMUM SPACE TO BE USED FOR THE INDICATED WRITINGS.
- RIVETS OR BOLTS : STAINLESS STEEL WITH COUNTERSUNK HEAD.
- MATERIAL NAMEPLATE : ALUMINIUM.
- LETTERING SIZE = 2.5 mm (EXCEPT HEADINGS).
- HEADINGS SIZE = 3 mm.
- * INFORMATION GIVEN BY VESSEL FABRICATOR.
- DB LOGO HAS TO BE IN COLOUR RAL 5005.

| REV | DATE | DESCRIPTION OF MODIFICATION | NBR OF MOD | BY |
|---|---|---|---|---|
| 002 | 27.10.2021 | UPDATED AS MARKED | | RSS |

Desmet Ballestra Group

| | | | | |
|---|---|---|---|---|
| DOCUMENT TYPE | ASSY | | | |
| PROJECT DESCRIPT | WORPAR | | | |
| ITEM NBR DISPOSITION | W532C.1 (19–T–750) | SECD | SAA | SCALE: |
| | | PROC.E | GVK | A3 |
| DOCUMENT DESCRIPTION | OIL/WATER SEPARATOR | PROJ.M | JCG | |
| | | DOM | PRA | AUTHOR: RSH/RSS |
| NAMEPLATE | | DATE | DRAWING NUMBER | REVISION |
| | | 01.04.2021 | 100176339 | 002 |