THIS DRAWING MUST NOT WITHOUT OUR CONSENT BE SHOWN TO ANY PERSON OUTSIDE THE RECIPIENT EMPLOY OR BE COPIED OR USED FOR THE PURPOSE OF MANUFACTURING ANY ARTICLE SHOWN IN THE DRAWING AND THE COPYRIGHT IN THE DRAWING SHALL BE AND REMAIN OUR SOLE PROPERTY. THIS DRAWING TOGETHER WITH ANY COPIES MADE BY THE RECIPIENT SHALL BE RETURNED ON DEMAND TO US.

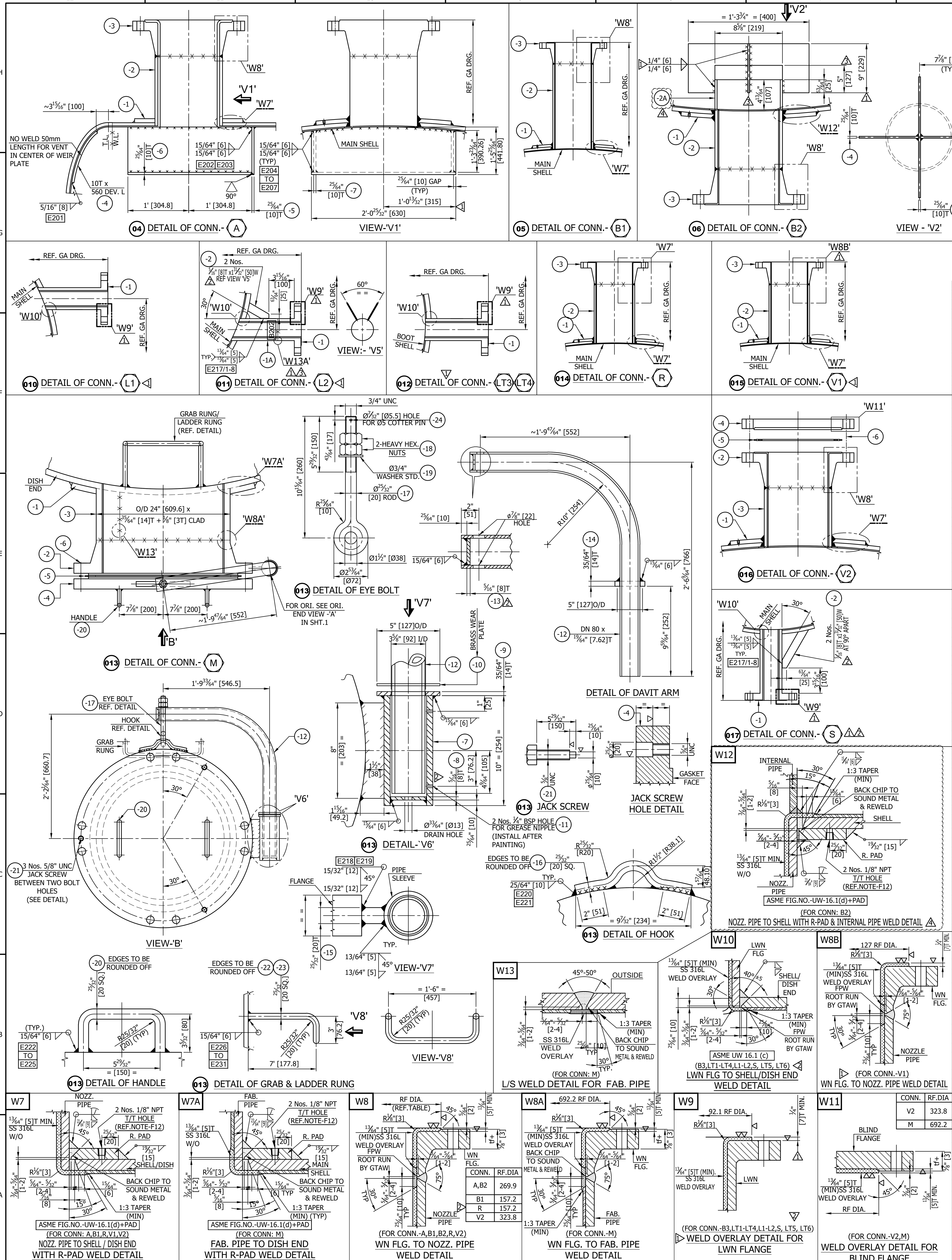

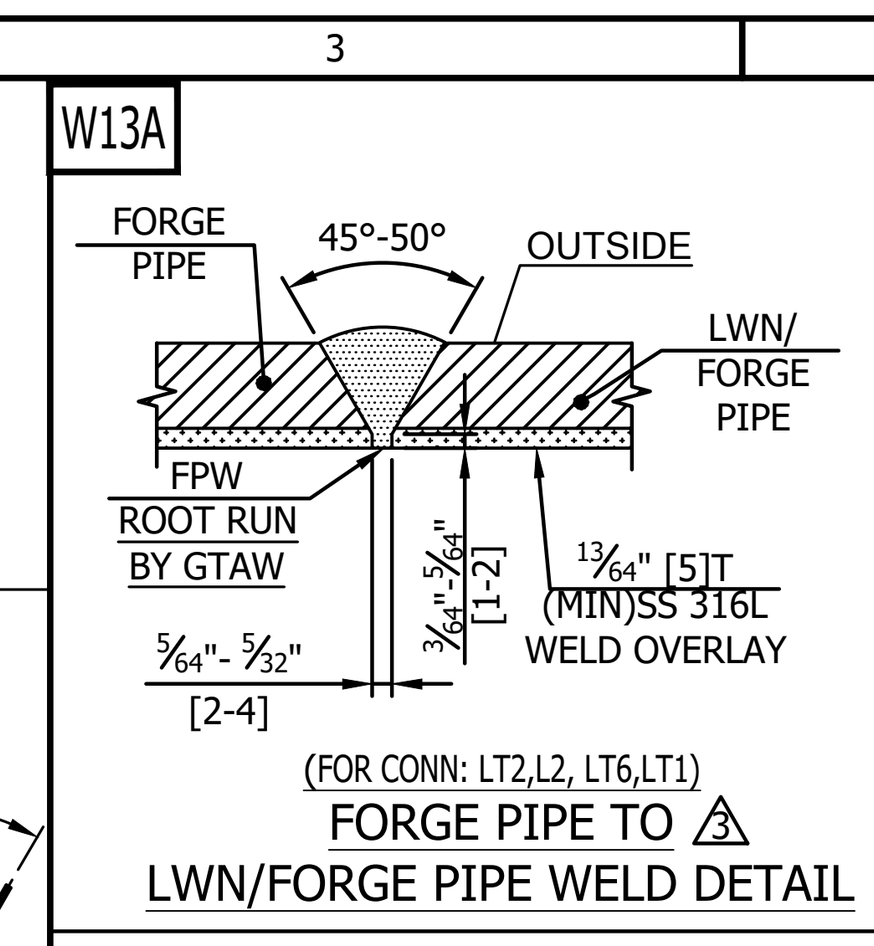

NOZZLES WELD JOINT NUMBER					
MARK	FAB. PIPE L/S	PIPE / TO FLANGE	NOZZLE PIPE / LWN TO SHELL/DISHEND	R-PAD TO SHELL / DISH END	REMARK
A	-	C201	D201	D201A	
B1	-	C202	D202	D202A	
B2	-	C203	D203	D203A	
B3	-	-	D204	-	
LT1	-	-	D205	-	
LT2	-	-	D206	-	
L1	-	-	D207	-	
L2	-	-	D208	-	
LT3	-	-	D209	-	
LT4	-	-	D210	-	
M	A201	C204	D211	D204A	
R	-	C205	D212	D205A	
V1	-	C206	D213	D206A	
V2	-	C207	D214	D207A	
S	-	-	D215		
LT5	-	-	D216	-	
LT6	-	-	D217	-	

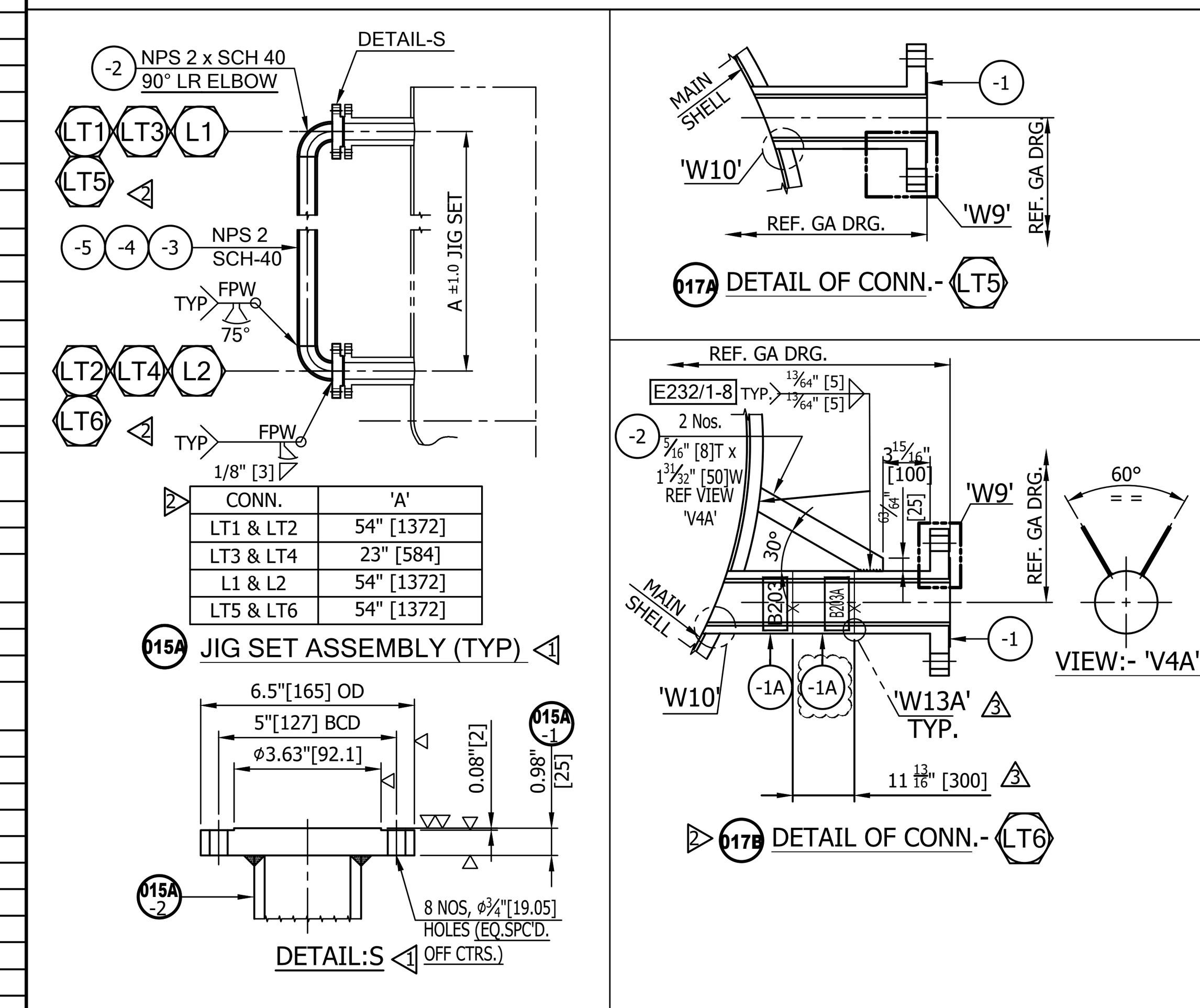

REV. NO.	SR. NO.	DESCRIPTION	QTY./ ITEM	MATERIAL	SIZE	WT. (kg)	REMARK
2	WELD JOINT NO.: E201 TO E215, E216/1-8, E217/1-8, E218 TO E231, E232/1-8, B201, B202, B203, B204						
	$$ 4.5T SS 316 SPWD GASKET WITH GRAPHITE FILLER AND 3.2T SS 316 INNER & OUTER RING. (DIMENSIONS AS PER ASME B 16.20)						
4					SUB TOTAL OF WEIGHT (Kg)	1535	
2	-2	STIFFENER	2	SA 516 GR 70	8T x 50W x ~410 L (CUT TO SUIT)	2	
3	-1A	FORGED PIPE	2	SA 105 + SS 316L W.O.	84.14 O/D x 50.8 I/D x 300 LG	16	
3	-1	LWN FLANGE	1	SA 105 + SS 316L W.O.	50.8 I/D x 16.67T x ASME 300 CL LWN FF x 330 LG . (FINISH L)	13	
2	017B	**CONN - LT6 ASSLY**					
2	-1	LWN FLANGE	1	SA 105 + SS 316L W.O.	50.8 I/D x 16.67T x ASME 300 CL LWN FF x 390 LG.	15	
2	017A	**CONN - LT5 ASSLY**					
2	-2	STIFFENER	2	SA 516 GR 70	8T x 50W x ~250 L (CUT TO SUIT)	1	
2	-1	LWN FLANGE	1	SA 105 + SS 316L W.O.	50.8 I/D x 16.67T x ASME 600 CL LWN FF x 350 LG.	14	
	017	**CONN - S ASSLY**					
	-6	STUD WITH 2HVY HEX NUTS	16+2	SA 193 GR B7/ SA 194 GR 2H	1" UNC x 185 L (FULL THRD.)	18	
	-5	GASKET	1+2	$$	DN 250 x ASME 300 CL B16.20	-	
	-4	BLIND FLANGE	1	SA 105 + SS 316L W.O.	DN 250 x ASME 300 CL BL FF	58	
1	-3	NOZZ. PIPE	1	SA 106 GR B + SS 316L W.O.	DN 250 x 9.27T x 295 LG.	28	
1	-2	FLANGE	1	SA 105 + SS 316L W.O.	DN 250 x ASME 300 CL WN FF (BORE ϕ 254.51)	41	
1	-1	RF PAD	1	SA 516 GR 70	20T x 470 ø DEV.	18	
	016	**CONN - V2 ASSLY**					
1	-3	FLANGE	1	SA 105 + SS 316L W.O.	DN 80 x ASME 600 CL WN FF (BORE ϕ 73.66)	7	
	-2	NOZZ. PIPE	1	SA 106 GR B + SS 316L W.O.	DN 80 x 7.62T x 275 LG.	4	
	-1	RF PAD	1	SA 516 GR 70	20T x 210 ø DEV.	2.8	
	015	**CONN - V1 ASSLY**					
2	-3	FLANGE	1	SA 105 + SS 316L W.O.	DN 100 x ASME 300 CL WN FF (BORE ϕ 97.18)	11	
2	-2	NOZZ. PIPE	1	SA 106 GR B + SS 316L W.O.	DN 100 x 8.56T x 270 LG.	6	
2	-1	RF PAD	1	SA 516 GR 70	20T x 240 ø DEV.	6	
	014	**CONN - R ASSLY**					
	-24	COTTER PIN	1	SS	5Ø x 45 L	-	
4	-23	LADDER RUNGS	2	SA 240 TYPE 316L	SQ 20 x 980 DEV. L	4	
4	-22	GRAB RUNG	1	SA 240 TYPE 316L	SQ 20 x 980 DEV. L	2	
	-21	JACK SCREW	3	SS 304	5/8" UNC x 150 L (REF. DET.)	0.7	
	-20	HANDLE	2	SA 516 GR 70	SQ 20 x 310 DEV. L	0.76	
	-19	WASHER	1	SS 304	FOR Ø3/4" STD.	-	
	-18	HEX. NUT	2	IS 1367 CL 4	3/4" UNC x STD.	0.1	
	-17	EYE BOLT	1	SA 105	3/4" UNC x AS PER DRG.	1	
	-16	ROD FOR HOOK	1	SA 516 GR 70	SQ 20 x 340 DEV. L	0.76	
	-15	DAVIT SUPP. PLATE	1	SA 516 GR 70	20T x 49W x 203 LG	1.5	
	-14	COLLAR PLATE	1	SA 516 GR 70	14T x 127 O/D x 92 I/D	0.66	
2	-13	END PLATE	1	SA 516 GR 70	8T x ϕ71	0.19	
	-12	DAVIT PIPE	1	SA 106 GR B	DN 80 x 7.62T x 1290 LG.	19	
	-11	GREASE NIPPLE	2	BRASS	1/4" BSP (STD)	-	
3	-10	WEAR PLATE	1	BRASS	5.5T x 127 O/D x 92 I/D	1.3	
	-9	COLLAR PLATE	1	SA 516 GR 70	14T x 127 O/D x 92 I/D	0.6	
2	-8	END PLATE	1	SA 516 GR 70	8T x ϕ87	0.28	
	-7	PIPE SLEEVE FOR DAVIT	1	SA 106 GR B	DN 90 x 5.74T x 254 LG.	4	
	-6	STUD WITH 2HVY HEX NUTS	24+3	SA 193 GR B7/ SA 194 GR 2H	1-1/2" 8UN x 300 L (FULL THRD.)	83	
	-5	GASKET	1+2	$$	DN 600 x ASME 300 CL B16.20	-	
	-4	BLIND FLANGE	1	SA 105 + SS 316L W.O.	DN 600 x ASME 300 CL BL FF	342	
	-3	FAB. PIPE	1	SA 516 GR 70 + SS 316L CLAD	14+3T x 310 W x 1862 DEV. LG.	112	
	-2	FLANGE	1	SA 105 + SS 316L W.O.	DN 600 x ASME 300 CL WN FF (BORE ϕ 581.6)	247	
	-1	RF PAD	1	SA 516 GR 70	22T x 940 ø DEV.	72	
	013	**CONN. M ASSLY**					
1	-1	LWN FLANGE	2	SA 105 + SS 316L W.O.	50.8 I/D x 16.67T x ASME 600 CL LWN FF x 305 LG.	12	
1	012	**CONN - LT3 & LT4 ASSLY**					
2	-2	STIFFENER	2	SA 516 GR 70	8T x 50W x ~400 L (CUT TO SUIT)	2	
1	-1A	FORGED PIPE	1	SA 105 + SS 316L W.O.	84.14 O/D x 50.8 I/D x 580 LG	16	
1	-1	LWN FLANGE	1	SA 105 + SS 316L W.O.	50.8 I/D x 16.67T x ASME 600 CL LWN FF x 300 LG. (FINISH L)	12	
1	011	**CONN - L2 ASSLY**					
1	-1	LWN FLANGE	1	SA 105 + SS 316L W.O.	50.8 I/D x 16.67T x ASME 600 CL LWN FF x 340 LG.	14	
1	010	**CONN - L1 ASSLY**					
2	-2	STIFFENER	2	SA 516 GR 70	8T x 50W x ~410 L (CUT TO SUIT)	1.3	
3	-1B	FORGED PIPE	1	SA 105 + SS 316L W.O.	84.14 O/D x 50.8 I/D x 145 LG	4	
2	-1A	FORGED PIPE	1	SA 105 + SS 316L W.O.	84.14 O/D x 50.8 I/D x 485 LG	13	
1	-1	LWN FLANGE	1	SA 105 + SS 316L W.O.	50.8 I/D x 16.67T x ASME 600 CL LWN FF x 300 LG . (FINISH L)	12	
1	09	**CONN - LT2 ASSLY**					
4	-1A	FORGED PIPE	1	SA 105 + SS 316L W.O.	84.14 O/D x 50.8 I/D x 145 LG	0.8	
4	-1	LWN FLANGE	1	SA 105 + SS 316L W.O.	50.8 I/D x 16.67T x ASME 600 CL LWN FF x 235 LG.	20	
1	08	**CONN - LT1 ASSLY**					
	-3	VORTEX BREAKER PLATE	1	SA 240 TYPE 316L	10T x 50W x 100 LG. (REF. DETAIL)	0.39	
	-2	VORTEX BREAKER PLATE	2	SA 240 TYPE 316L	10T x 45W x 46 LG. (REF. DETAIL)	0.32	
1	-1	LWN FLANGE	1	SA 105 + SS 316L W.O.	50.8 I/D x 16.67T x ASME 600 CL LWN FF x 310 LG.	13	
1	07	**CONN - B3 ASSLY**					
3	-5	VORTEX BREAKER PLATE	1	SA 240 TYPE 316L	10T x 229W x 400 LG. (REF. DETAIL)	7	
3	-4	VORTEX BREAKER PLATE	2	SA 240 TYPE 316L	10T x 195W x 229 LG. (REF. DETAIL)	7	
	-3	FLANGE	1	SA 105 + SS 316L W.O.	DN 200 x ASME 300 CL WN FF (BORE ϕ 193.68)	30	
4	-2A	INTERNAL. PIPE	1	SA 312 TP 316L	DN 200 x 8.18T x 107 LG. (FINISH LG.)	4.6	
4	-2	NOZZ. PIPE	1	SA 106 GR B + SS 316L W.O.	DN 200 x 12.7T x 230 LG.	14	
	-1	RF PAD	1	SA 516 GR 70	20T x 345 ø DEV.	10.5	
	06	**CONN - B2 ASSLY**					
	-3	FLANGE	1	SA 105 + SS 316L W.O.	DN 100 x ASME 300 CL WN FF (BORE ϕ 97.18)	11	
	-2	NOZZ. PIPE	1	SA 106 GR B + SS 316L W.O.	DN 100 x 8.56T x 270 LG.	6	
	-1	RF PAD	1	SA 516 GR 70	20T x 240 ø DEV.	6	
	05	**CONN - B1 ASSLY**					
	-7	PLATE	2	SA 240 TYPE 316L	10T x 391W x 610 LG	37	
	-6	PLATE	1	SA 240 TYPE 316L	10T x 610W x 630 LG	30	
	-5	PLATE	1	SA 240 TYPE 316L	10T x 442W x 630 LG	22	
	-4	WEAR PLATE	1	SA 240 TYPE 316L	10T x 560 DEV.ϕ	19	
	-3	FLANGE	1	SA 105 + SS 316L W.O.	DN 200 x ASME 300 CL WN FF (BORE ϕ 193.68)	30	
	-2	NOZZ. PIPE	1	SA 106 GR B + SS 316L W.O.	DN 200 x 12.7T x 245 LG.	16	
	-1	RF PAD	1	SA 516 GR 70	20T x 345 ø DEV.	10.5	
	04	**CONN - A ASSLY**					

BILL OF MATERIAL

REV. NO.	SR. NO.	DESCRIPTION	QTY./ ITEM	MATERIAL	SIZE	WT. (kg)	REMARK
					SUB TOTAL OF WEIGHT (Kg)	44	
2	-6	PIPE FOR LT5 & LT6	1	SA 106 GR B	DN 50 x 3.91T x 1220 L	6	
1	-5	PIPE FOR L1 & L2	1	SA 106 GR B	DN 50 x 3.91T x 1220 L	6	
1	-4	PIPE FOR LT3 & LT4	1	SA 106 GR B	DN 50 x 3.91T x 432 L	2	
2	-3	PIPE FOR LT1 & LT2	1	SA 106 GR B	DN 50 x 3.91T x 1220 L	6	
2	-2	ELBOW (SEAMLESS)	8	SA 234 GR WPB	DN 50 x 3.91T x 90°, LR, BW	3.3	
2	-1	FLANGE	8	IS 2062 GR E 250 QUALITY B	25T x 165 O/D (FINISH SIZE)	21	
	015A	**JIG SET ASSEMBLY**					

BILL OF MATERIAL

REV. NO.	DATE	DESCRIPTION	BY	CHD.	APPD.
4	17-08-2022	REVISED AS MARKED 4 & ISSUED FOR APPROVAL	SBP	JAD	DKB
3	26-07-2022	REVISED AS MARKED 3 & ISSUED FOR APPROVAL	SBP	AAS/JAD	DKB
2	20-05-2022	REVISED AS MARKED 2 & ISSUED FOR APPROVAL	SBL	KRK	DKB
1	19-01-2022	REVISED AS PER CLIENTS COMMENS AS MARKED 1 & ISSUED FOR APPROVAL	SBL	KRK	DKB
0	29-10-2021	ISSUED FOR APPROVAL	SBL	KRK	DKB

REVISIONS

ENGINEERING & PROJECT MANAGEMENT

CUSTOMER / CLIENT

WORLD ENERGY PARAMOUNT
PARAMOUNT, CA

THE ANUP ENGINEERING LTD.
AHMEDABAD

OWNER : AIR PRODUCT MANUFACTURING LLC	CLIENT'S DRAWING NO. : EN207120-ANUP-9V3-00023
P.O.NO. : 4505487163, DT. 9 JUL. 2021	PROJECT NAME : WORLD ENERGY RENEWABLES PROJECT
PROJECT LOCATION : WORLD ENERGY, PARAMOUNT, CA, USA	UNIT NAME : PROPANE RECOVERY

DRN.	SBL	STRIPPER FEED DRUM	ITEM NO. 18-D-372
CHD.	KRK		
APPD.	DKB		
DATE	29-10-2021	SADDLE & NOZZLES DETAILS DRAWING	QTY ONE
SCALE	1 : 20		

MFR'S SERIAL No.: V-1270 | MFR'S DRG. NO.: V-1270-FAD-2021 | SHEET NO. 2/1 OF 2 | REV. 4 | A1

ORIGINAL FRAME SIZE 841 x 594 mm

MFR`S JOB NO: V-1270

THIS DRAWING MUST NOT WITHOUT OUR CONSENT BE SHOWN TO ANY PERSON OUTSIDE THE RECIPIENT EMPLOY OR BE COPIED OR USED FOR THE PURPOSE OF MANUFACTURING ANY ARTICLE SHOWN IN THE DRAWING AND THE COPYRIGHT IN THE DRAWING SHALL BE AND REMAIN OUR SOLE PROPERTY. THIS DRAWING TOGETHER WITH ANY COPIES MADE BY THE RECIPIENT SHALL BE RETURNED ON DEMAND TO US.

ORIGINAL FRAME SIZE 594 x 420 mm

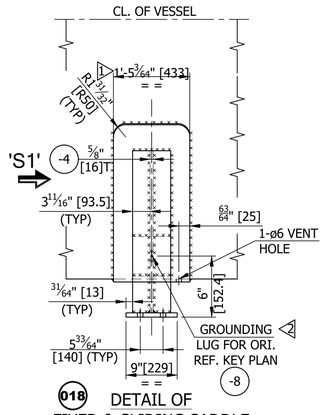

018 DETAIL OF FIXED & SLIDING SADDLE SUPPORT

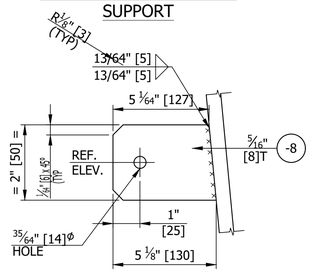

1 018 DETAIL OF GROUNDING LUG

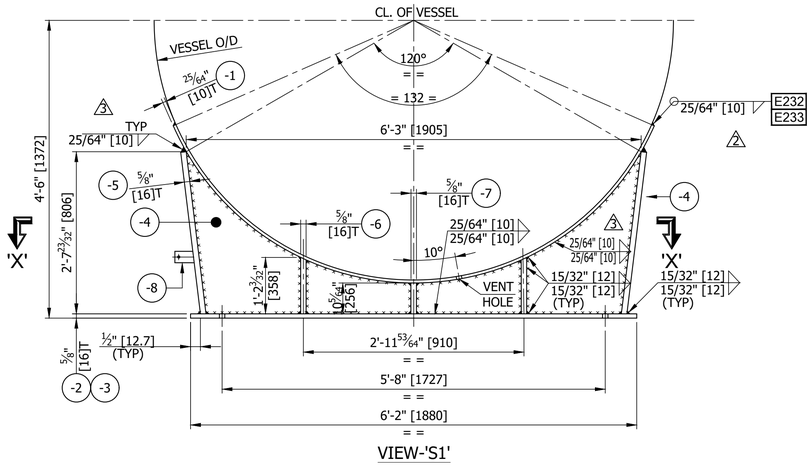

VIEW-'S1'



SECTION-'X-X'

DETAIL OF BASE PLATE (FIXED SADDLE)



SECTION-'X-X'

DETAIL OF BASE PLATE (SLIDING SADDLE)

	WELD JOINT NO.: E232,E233						
					SUB TOTAL OF WEIGHT (Kg)	599	
1	-8	GROUNDING LUG	2	SS 304	8T x 50 W x 130 L	0.9	
	-7	RIB PLATE	4	SA 516 GR 70	16T x 94 W x 256 L	12	
	-6	RIB PLATE	8	SA 516 GR 70	16T x 94 W x 358 L	34	
	-5	END PLATE	4	SA 516 GR 70	16T x 203 W x 806 L (REF. DETAIL)	82	
	-4	WEB PLATE	2	SA 516 GR 70	16T x 806 W x 1905 L (REF. DETAIL)	191	
	-3	BASE PLATE	1	SA 516 GR 70	16T x 229 W x 1880 L (REF. DETAIL)	54	
	-2	BASE PLATE	1	SA 516 GR 70	16T x 229 W x 1880 L (REF. DETAIL)	54	
1	-1	PAD PLATE	2	SA 516 GR 70	10T x 433 W x 2525 DEV.L	171	
	018	FIXED & SLIDING SADDLE SUPPORT ASSLY					

REV. NO.	SR. NO.	DESCRIPTION	QTY./ ITEM	MATERIAL	SIZE	WT. (kg)	REMARK

BILL OF MATERIAL

REV. NO.	DATE	DESCRIPTION	BY	CHD.	APPD.
4	17-08-2022	NO CHANGED & ISSUED FOR APPROVAL	SBP	JAD	DKB
3	26-07-2022	REVISED AS MARKED 3 & ISSUED FOR APPROVAL	SBP	AAS/JAD	DKB
2	20-05-2022	REVISED AS MARKED 2 & ISSUED FOR APPROVAL	SBL	KRK	DKB
1	19-01-2022	REVISED AS PER CLIENTS COMMENS AS MARKED 1 & ISSUED FOR APPROVAL	SBL	KRK	DKB
0	29-10-2021	ISSUED FOR APPROVAL	SBL	KRK	DKB

REVISIONS

ENGINEERING & PROJECT MANAGEMENT

CUSTOMER / CLIENT

WORLD ENERGY PARAMOUNT
PARAMOUNT, CA

THE ANUP ENGINEERING LTD.
AHMEDABAD

OWNER : AIR PRODUCT MANUFACTURING LLC	CLIENT'S DRAWING NO. : EN207120-ANUP-9V3-00023
P.O.NO. : 4505487163, DT. 9 JUL. 2021	PROJECT NAME : WORLD ENERGY RENEWABLES PROJECT
PROJECT LOCATION : WORLD ENERGY, PARAMOUNT, CA, USA	UNIT NAME : PROPANE RECOVERY

DRN.	SBL	STRIPPER FEED DRUM	ITEM NO. 18-D-372
CHD.	KRK		
APPD.	DKB		
DATE	29-10-2021	SADDLE & NOZZLES DETAILS DRAWING	QTY ONE
SCALE	1 : 20		

MFR'S SERIAL No.:	MFR'S DRG. NO.:	SHEET NO.	REV.	
V-1270	V-1270-FAD-2021	2/2 0F 2	4	A2

MFR`S JOB NO: V-1270