1.) CAPACITIES
MAXIMUM TEMPERATURE: 300°F
DRUM CAPACITY: 4 IBC TOTE.
4000LBS. PER TOTE
CIRCULATING FAN: 1048 CFM, 1-1/2 HP
HEAT EXCHANGER SURFACE AREA: 336 SQ. FT.
HEAT EXCHANGER PRESSURE RATING:
200 PSIG @ 388°F

2.) UTILITY REQUIREMENTS
ELECTRIC: 480/3/60
SATURATED STEAM FLOW RATE BASED
ON PRESSURE AND USAGE: 5 - 200 PSIG

3.) MATERIAL OF CONSTRUCTION
EXTERIOR COVERS: 18 GA. CRS
INTERIOR WALLS: 12 GA. CRS
INSULATION: 3" X 6# DENSITY MINERAL WOOL

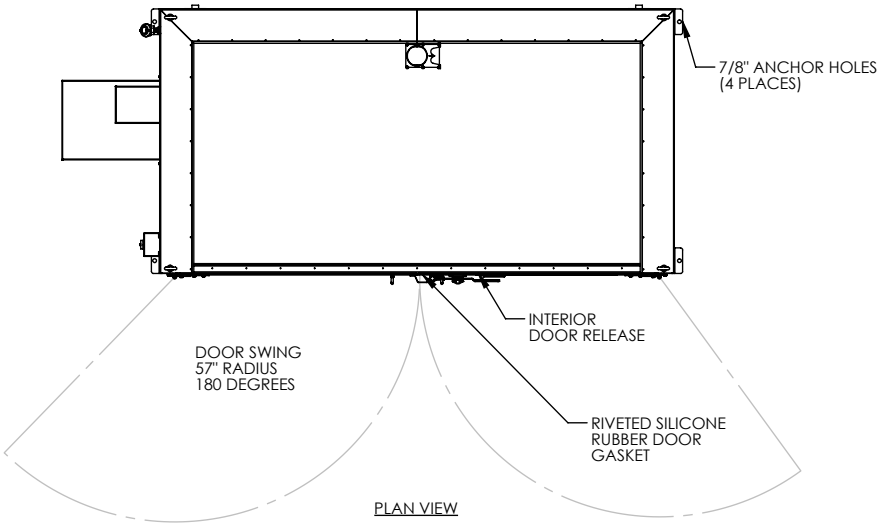

PLAN VIEW

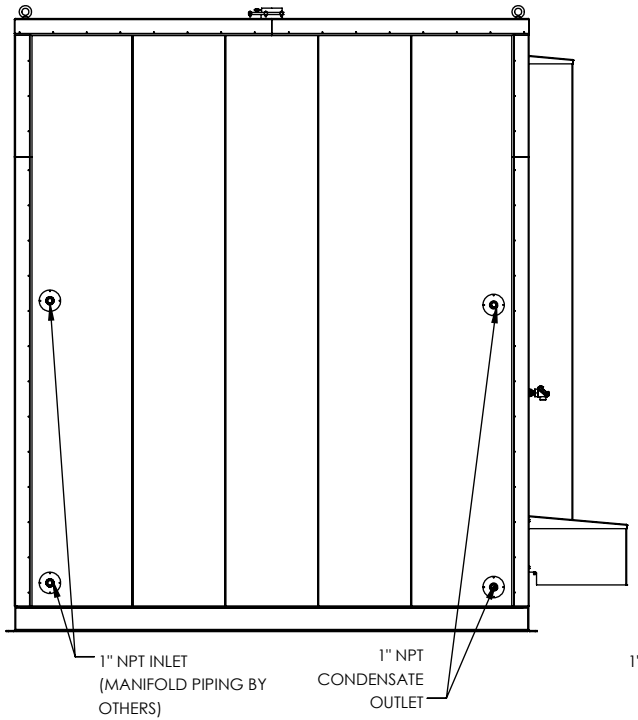

REAR ELEVATION

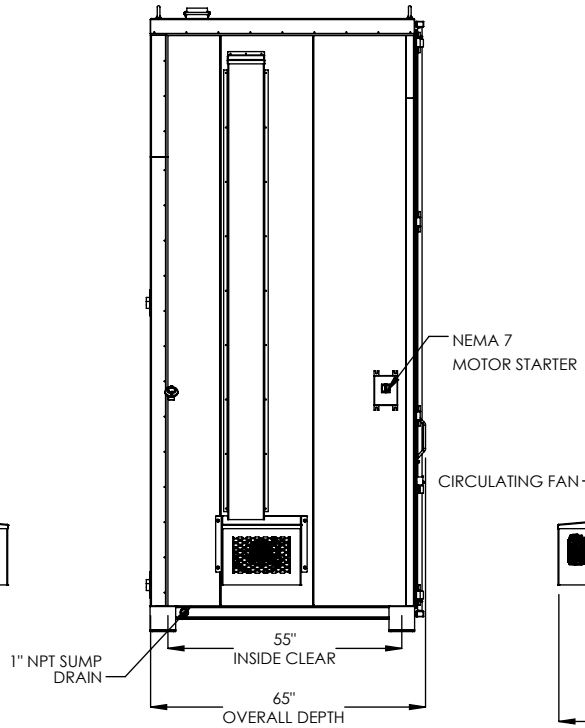

LEFT SIDE ELEVATION

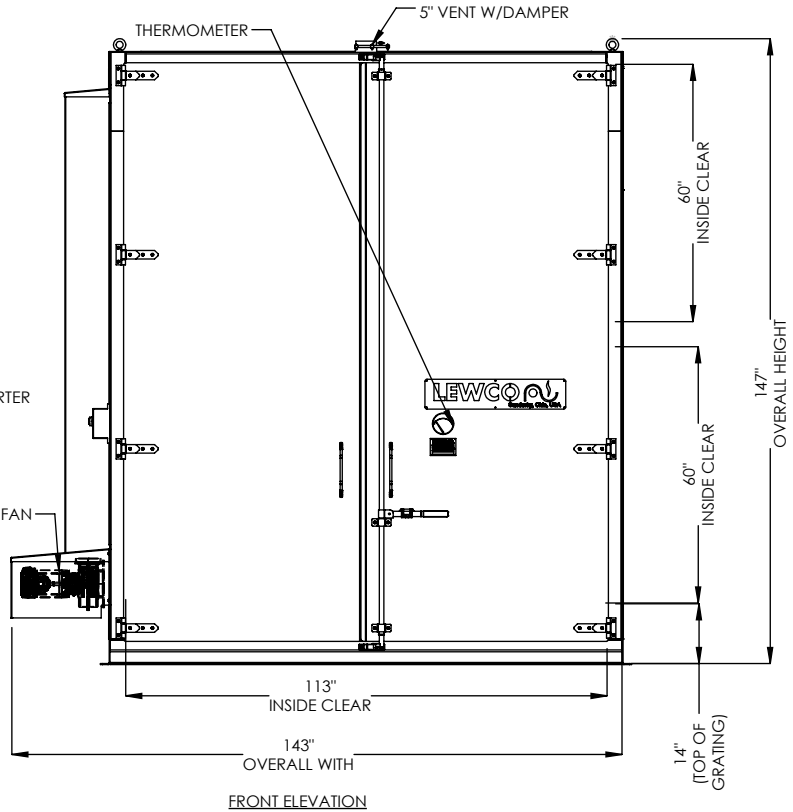

FRONT ELEVATION

APPROVAL (IF REQUIRED)		REVISION HISTORY					
APPROVED BY:	DATE:	REV.	DESCRIPTION	DATE	BY	TO:	DREW MARINE USA
ONLY THE DIMENSIONS, FEATURES AND NOTES EXPLICITLY PROVIDED IN THIS DRAWING ARE PRESENTED FOR APPROVAL. IF ADDITIONAL INFORMATION IS NEEDED TO MEET CUSTOMER REQUIREMENT, PLEASE MARK-UP DRAWING AND RETURN TO LEWCO TO REVISE & RESUBMIT. SOME CHANGES MAY REQUIRE A PRICE CHANGE						SHIP TO:	WATERBURY CT 06705
						MODEL:	SC4TV
						DESCRIPTION:	4 TOTE HEATING CABINET-THERMAL FLUID
						FINISH:	STANDARD BLUE (RAL5017)
						DRAWING:	OV-000771

DRAWN BY: JGALLOWAY
DATE: 9/21/2020
SHEET#: 1 OF 1

THIS DRAWING IS CONFIDENTIAL AND SUBJECT TO RETURN. IT ALSO MUST NOT BE COPIED, REPRODUCED OR USED FOR ANY PURPOSE WITHOUT THE WRITTEN CONSENT OF LEWCO, INC. ALL RIGHTS RESERVED

LEWCO
706 LANE ST. SANDUSKY, OH 44870
PH. (419) 625-4014 FAX. (419) 625-3746
WWW.LEWCOINC.COM

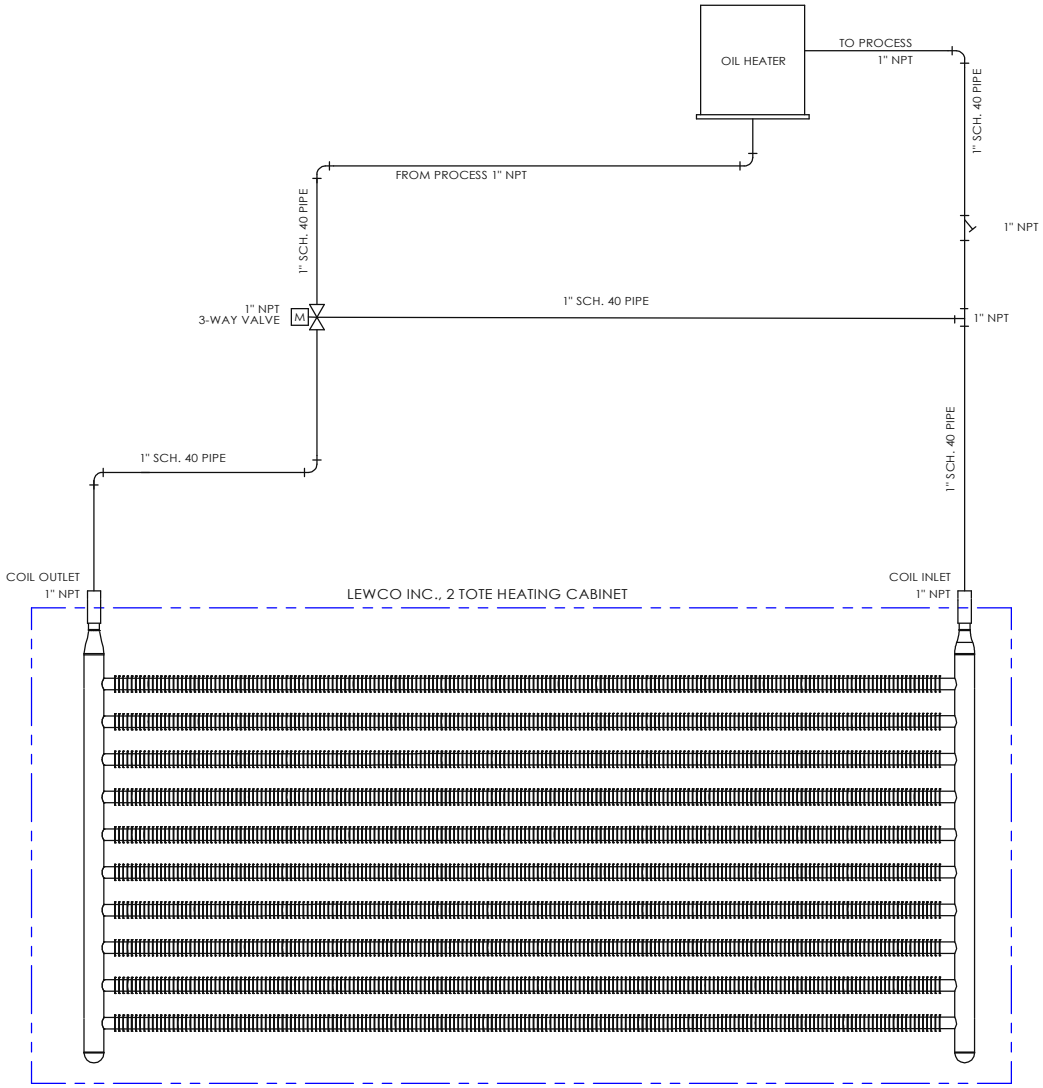

APPROVAL (IF REQUIRED)		REVISION HISTORY				TO:	DRAWN BY: jgalloway
APPROVED BY:	DATE:	REV.	DESCRIPTION	DATE	BY	SHIP TO:	DATE: 6/1/2017
ONLY THE DIMENSIONS, FEATURES AND NOTES EXPLICITLY PROVIDED IN THIS DRAWING ARE PRESENTED FOR APPROVAL. IF ADDITIONAL INFORMATION IS NEEDED TO MEET CUSTOMER REQUIREMENT, PLEASE MARK-UP DRAWING AND RETURN TO LEWCO TO REVISE & RESUBMIT. SOME CHANGES MAY REQUIRE A PRICE CHANGE						MODEL: NS-SC2TS DESCRIPTION: 2 TOTE HEATING CABINET, THERMAL FLUID FINISH: STAINLESS STEEL DRAWING: OV-000330 SCHEMATIC	SHEET#: 1 OF 1

THIS DRAWING IS CONFIDENTIAL AND SUBJECT TO RETURN. IT ALSO MUST NOT BE COPIED, REPRODUCED OR USED FOR ANY PURPOSE WITHOUT THE WRITTEN CONSENT OF LEWCO, INC. ALL RIGHTS RESERVED

LEWCO
706 LANE ST. SANDUSKY, OH 44870
PH. (419) 625-4014 FAX. (419) 625-3746
WWW.LEWCOINC.COM

LEWCO

"Performance that's Built to Last!"

DRUM & TOTE HEATERS

Multi-Level

Model: SC4TV

(4) Tote Hot Box, Steam

LEWCO's tote heating product line offers standard cost effective solutions for melting, viscosity reduction, elevated temperature storage and general industrial heating applications. The Multi-Level design features an insulated base with spill containment sump. All models feature our signature heavy-duty welded construction and simple, user-friendly controls. Please consult factory for non-standard safety features required for compliance with NFPA 86.

Capacity

- (4) totes/ IBC tanks
- 4,000 lbs. per tote

Operating Temperature

- 125°F - 300°F
  Note: Maximum achievable temperature is dependent on steam pressure.
- Consult factory for applications below 125°F

Construction/ Features

- Welded, 1/8" steel shell
- Optional: Stainless steel
- Insulation: 3" x 6# mineral wool
- Heavy duty doors with strap hinges, 3-point latch system, and high-temperature silicone rubber gaskets create a tight seal for efficient heating.
- Interior door release for safety

Spill Containment

- 96 gallon capacity
- Sump drain 1" NPT

Heat Source & Capacity

- Saturated Steam, 10-200 PSIG
- Optional: Hot oil & hot water
- All heat exchangers are welded by A.S.M.E. certified welders and then hydro-tested at 300 PSIG
- Standard: 168 sq. ft.
- Optional: 336 sq. ft.

Control Options

- No Controls
- Non-electronic, self-acting temperature controller, limited to 150 psig, available in the following ranges:
  - 125°-212°F, ½" valve
  - 158°-300°F, ½" valve
- Single set-point temperature controller and redundant high-limit controller.
  - NEMA 12 enclosure with full voltage lockable disconnect switch.
  - Controls are wired to NFPA 70 and 79 electrical standards.
  - Electronic Control Options:
    - Batch Timer
    - Chart Recorder
    - Data Logger
    - Door Switch
    - NEMA 7 explosion-proof electrical

Finish

- Blue or gray alkyd enamel
- Optional: Premium finish for corrosive environments.

Electrical Requirements

- Voltage: 480/3/60
- Disconnect: 30 amps
- Other voltages available
- Depending on options, power may not be required.

Shipping & Installation

- Ships completely assembled for easy installation.
- Shipping weight: 6,500 lbs.
- Suitable for indoor or outdoor use.

Additional Options

- Circulating Fan: 1,048 CFM, TEFC or explosion-proof motor with motor starter
- Steam Trap(s)
- 5" exhaust vent with damper
- Outdoor Service Package: premium finish, door trim, and NEMA 3 enclosure.
- Independent 3rd party inspection
- Custom sizes and features available. Please consult a LEWCO Applications Engineer for more information.

Quality Assurance

- Each unit comes complete with a (3) year warranty and is fully assembled, wired, and tested prior to shipment.

Phone: 419.502.2780
Fax: 419.625.1247
ovensales@lewcoinc.com

ISO 9001 Quality Certified System

NFPA MEMBER

MADE IN USA

OPERATING & MAINTENANCE INSTRUCTIONS AND PARTS LIST

for

PB - Cast Aluminum Pressure Blowers
SPB - Stamped Steel Pressure Blowers
PBS - Fabricated Steel Pressure Blowers
LM - Volume Blowers

CONTENTS

I. General Safety Notes .....Page 2
II. Receiving .....Page 2
III. Handling.....Page 2
IV. General Installation Instructions.....Page 2
V. Operation.....Page 3
VI. General Maintenance .....Page 3
VII. V-belt Drives.....Pages 4 & 5
VIII. Bearing Maintenance.....Pages 4 & 5
IX. Warranty.....Page 5
X. Ordering Replacement Parts .....Page 6
XI. Trouble Shooting .....Page 6
XII. Assembly Drawings .....Pages 7 & 8

NOTICE

If fan will not be put into operation within 30 days, obtain long-term storage instructions from our website (www.cincinnatifan.com) or your local Cincinnati Fan Sales Office.

⚠ DANGER

ALL FANS AND BLOWERS SHOWN HAVE ROTATING PARTS AND PINCH POINTS. SEVERE PERSONAL INJURY CAN RESULT IF OPERATED WITHOUT GUARDS. STAY AWAY FROM ROTATING EQUIPMENT UNLESS IT IS DISCONNECTED FROM ITS POWER SOURCE AND ALL ROTATING PARTS HAVE STOPPED MOVING.

READ ALL OPERATING INSTRUCTIONS CONTAINED HEREIN
BEFORE INSTALLING EQUIPMENT.

⚠ DANGER

NO GUARANTEE OF ANY LEVEL OF SPARK RESISTANCE IS IMPLIED BY SPARK RESISTANT CONSTRUCTION. IT HAS BEEN DEMONSTRATED THAT ALUMINUM IMPELLERS RUBBING ON RUSTY STEEL MAY CAUSE HIGH INTENSITY SPARKS. AIR STREAM MATERIAL AND DEBRIS OR OTHER SYSTEM FACTORS MAY ALSO CAUSE SPARKS.

PART # 01111
CATALOG #PMA-302
SUPERSEDES: PMA-793

cincinnati fan

7697 Snider Road, Mason, Ohio 45040-9135 (513) 573-0600

Traditional Steam or Thermal Fluid "Hot Box" Control Options

NO CONTROLS:

- Without temperature controls, the heating medium supply temperature determines hot box temperature. This is a simple, safe, and reliable temperature control method particularly if the application is limited to a single, constant temperature. Includes door mounted thermometer.

SELF-ACTING TEMPERATURE CONTROL SYSTEM:

- Direct-operated valve which is regulated by a capillary tube connected to a temperature probe
- Set-and-forget regulation
- No external electrical or pneumatic connections required
- Ideal for remote or electrically classified areas
- Not recommended for frequent temperature changes
- Includes Y-strainer
- Includes door mounted thermometer.
- Temperature ranges include:
    - 85°F to 165°F
    - 166°F to 250°F
    - 251°F to 316°F

ELECTRONIC TEMPERATURE CONTROL SYSTEM:

- Single set-point temperature controller and redundant high-limit controller housed in a NEMA 12 enclosure employing a full voltage lockable disconnect switch. Controls are wired to NFPA 70 and 79 electrical standards. Independent 3rd party inspections available.

I. GENERAL SAFETY NOTES

1. Rotating parts including shaft and V-belt drives must be properly guarded to prevent personal injury.
2. Electrical wiring must be accomplished by a qualified electrician in accordance with all applicable codes.
3. Care should be taken:
   - Not to run fan above its safe speed (See Performance Tables in Sales Catalog or call CF sales office).
   - Not to operate in excessive temperatures (See limitations in Sales Catalog or call CF sales office).
   - Not to operate in dangerous environments.
   - Read all instructions carefully.

II. RECEIVING

Receiving Inspection

When unit is received, inspect immediately for damaged or missing parts. Even though all units are carefully inspected and prepared for shipment at the factory, rough handling en route may cause concealed damage or cause nuts, set screws, bolts or locking collars to work loose. Be certain all fasteners are tightened securely. Rotate wheel by hand to verify that it rotates freely and that there are no obstructions.

Inspect all shipments carefully for damage. **The receiver must note any damage on the carrier's bill of lading and file a claim immediately with the freight company in case of damage.** Keep a record of all equipment received, including inspection details and date of receipt because of the possibility of partial shipments.

III. HANDLING

Handle your equipment with care. Some fans are provided with lifting lugs or holes for easy handling. Others must be handled using nylon straps or well-padded chains and cables which protect the fan's coating and housing. Spreader bars should be used when lifting large parts.

Centrifugal fans are best lifted using one strap under the fan's scroll and another strap around the bearing base. DO NOT LIFT CENTRIFUGAL FANS BY THE FAN SHAFT, WHEEL, FLANGES, INLET SUPPORT OR MOTOR EYE BOLT.

NOTICE

If fan will not be put into operation within 30 days, obtain long-term storage instructions from our website (www.cincinnatifan.com) or your local Cincinnati Fan Sales Office.

IV. GENERAL INSTALLATION INSTRUCTIONS

Foundations

Fan foundation must be flat, level and rigid. Where foundation is not completely flat, shims must be placed under fan support at each anchor bolt as required. Bolting fan to an uneven foundation distorts alignment and causes vibration.

Structural steel foundations should be heavily cross-braced for load support.

Table #1

TORQUE VALUES FOR SPLIT TAPER BUSHINGS	
Bushing Size	MINIMUM RECOMMENDED TORQUE (INCH-LBS)
H	95
B & P	192
Q & R	350

Table #2

SET SCREW TORQUE VALUES		
SET SCREW SIZE		MINIMUM REQUIRED TORQUE (INCH-LBS)
Diameter & No. of Threads/Inch	Hex Size Across Flats (Allen Wrench)	
1/4-20	1/8"	65
5/16-18	5/32"	165
3/8-16	3/16"	228
7/16-14	7/32"	348
1/2-13	1/4"	504
5/8-11	5/16"	1104

NOTE: If wheel set screws are loosened and/or wheel is removed from shaft, set screws *must* be replaced. Set screws cannot be used more than once. Use knurled, cup point set screws with a locking patch.

V. OPERATION

Before Connecting Power

1. Inspect all fasteners and retighten if necessary:
   a. Foundation bolts.
   b. Set screws in fan and wheel and V-belt drive (See Tables #1 & #2 on preceding page).
   c. Housing, bearing and motor mounting.
2. Any inspection doors should be tight and sealed.
3. Bearings should be checked for alignment and lubrication (See Bearing Maintenance, pages 4 & 5).
4. Turn rotating assembly by hand to insure that it does not strike housing. If the wheel strikes the housing, the wheel may have moved on the shaft or the bearings may have shifted in transit. Correction *must* be made prior to start up.
5. Check motor to insure proper speed and electrical characteristics.
6. Check V-belt drive for alignment and correct belt tension.
7. After wiring, energize motor for one second to check for proper rotation.

VI. GENERAL MAINTENANCE

CAUTION

Before any maintenance or service is performed, assure that unit is disconnected or locked out from power source to prevent accidental starting.

The key to good fan maintenance is a regular and systematic inspection of all fan parts. Severity of the application should determine frequency of inspection. The components requiring service are generally the moving parts which include bearings, fan wheel, belts, sheaves and motor.

Cast Aluminum & Metal Parts

Cast aluminum and steel parts usually do not require maintenance during the life of the unit except painted metal surfaces that may require periodic repainting. In a severe, dirty operation, the wheel should be cleaned with a wire brush to prevent an accumulation of foreign matter that could result in fan unbalance. After cleaning wheel, inspect for possible cracks or excessive wear, which can cause unbalance. ***DO NOT*** operate a wheel that is cracked, chipped, has broken blades or excessive wear. **NOTE:** If wheel set screws are loosened and/or wheel is removed from shaft, set screws *must* be replaced. Set screws cannot be used more than once.

Belts on V-belt drive units require periodic inspection and replacement when worn. For multiple belt drives, belts should be replaced with matched sets.

Motor Maintenance

1. Disconnect or lock out power to motor.
2. Removing dust and dirt: Blow out open type motor windings with low pressure air to remove dust or dirt. Air pressure above 50 P.S.I. should not be used as high pressure may damage insulation and blow dirt under loosened tape. Dust accumulation can cause excessive insulation temperatures.
3. Lubrication: The motor bearings and the fan bearings on the belt drive fans should be greased at regular intervals. Motor manufacturers' greasing instructions and recommendations should be followed closely. Avoid the use of a pressure greasing system which tends to fill the bearing chamber completely. Do not overgrease. Use only 1 or 2 shots with a hand gun in most cases. Maximum hand gun rating 40 P.S.I. Rotate bearings during lubrication where good safety practice permits.
   NOTE: On motors with non-regreasable, sealed bearings, no lubrication is required for the life of the bearings.

To prevent rusting of bearing parts, the motor shaft must be rotated at regular intervals (30 days) to assure these parts are well covered with oil or grease.

A WORD OF CAUTION ABOUT MOTORS

Using your hand to test the running temperature of a motor can be a very painful experience:

Normal body temperature .....98.6° F

Threshold of pain caused by heat.....120.0° F

Average temperature of hot tap water.....140.0° F

Average temperature of hot coffee.....180.0° F

Normal operating temperature of a fully loaded electric motor open type, 70° F ambient temperature .....174.0° F

VII. V-BELT DRIVES

Care should be taken not to overtighten V-belt drive. Excessive belt tension overloads fan and motor bearings. It is much less expensive to replace belts worn from slippage than to replace bearings damaged from excessive loading.

Fans shipped completely assembled have had V-belt drive aligned at the factory. Alignment should be rechecked before operation as a precaution due to handling during shipment.

1. Be sure sheaves are locked in position.
2. Key should be seated firmly in keyway.
3. Place straight edge or taut cord across faces of driving and driven sheaves to check alignment. The motor and fan shafts must be parallel and V-belts must be at right angles to the shafts.
4. Start the fan. Check for proper rotation. Run fan at full speed. A slight bow should appear on slack side of belt. Disconnect power and adjust belt tension by adjusting motor on its sliding base. All belts must have some slack on one side.
5. If belts squeal at start up, they may be too loose.
6. When belts have had time to seat in the sheave grooves, then readjust belt tension (2-3 days).

Table #3 (See Bearing Maintenance, page 5.)

Conditions Around Bearing	Operating Temperature of Fan	**Greasing Intervals
Fairly Clean	up to 120 °F	6-12 months
	120°-160°F	2-3 months
	160°-200°F plus*	1-2 months
Moderate to Extremely Dirty	up to 160°F	1-2 months
	160°-200°F plus*	2-4 weeks
Cold Storage Room		every defrosting period or no more than 4 months

*For fan applications over 200°F: greasing intervals should be from several days to 2 weeks, depending on the temperature.

**For vertical installations, greasing intervals should be twice as frequent as table values.

The following greases, or one that is equivalent to the general description, are recommended for the following temperatures or excessive moisture applications.

Operating Conditions	Use Grease Equivalent to these Grades
Temperatures -65°F to 0°F	Esso-Beacon #325 (-65°F) Mobil Grease #28 (-65°F) Shell Oil Aeroshell No. 7 (-100°F)

General Description: Versatile multipurpose microgel thickened synthetic hydrocarbon grease with corrosion inhibitors, anti-oxidant additives, water resistance tendencies and EP characteristics.

Temperature 0°F to 200°F inclusive (Also use for heavy condensation or direct splash of water)	Mobil Oil - Mobilux EP #2 Shell Oil - Shell Alvania EP #2 Chevron - Chevron SRI #2

General Description: Multipurpose NLGI#2 grease from lithium soap with EP characteristics, rust inhibitors, anti-oxidant additives and good water resistance tendencies.

Temperatures over 200°F	Dow Corning-DC44 (400°F) (Not compatible with non-silicon based greases)

General Description: Versatile multipurpose microgel thickened synthetic hydrocarbon grease with corrosion inhibitors, anti-oxidant additives, water resistance tendencies and EP characteristics.

V-belt drive assembly can be mounted as follows:

1. Clean motor and fan shafts. Be sure they are free from corrosive material. Clean bore of sheaves and coat with heavy oil for ease of shaft entry. Remove oil, grease, rust or burrs from sheave grooves.
2. Place fan sheave on fan shaft and motor sheave on its shaft. **Do not pound sheaves** on as this may damage bearings. Tighten sheaves per Table #1 or #2 on page 2.
3. Move motor on slide base so belts can be placed in grooves of both sheaves without forcing. Do not roll belts or use a tool to force belts over the grooves.
4. Align fan and motor shafts so they are parallel. The belts should be at right angles to the shafts. A straight edge or taut cord placed across the face of the sheaves will aid in alignment.
5. Tighten belts by adjusting motor base. Correct tension gives the best drive efficiency. Excessive tension causes undue bearing pressure.
6. Start the fan and run it at full speed. Adjust belt tension until only a slight bow appears on the slack side of the belts. If slippage occurs, a squeal will be heard at start-up. Eliminate this squeal by **disconnecting or locking out motor from power source** and then tightening up the belts.
7. Give belts a few days running time to become seated in sheave grooves, then readjust belt tension.

If the shafts become scratched or marked, carefully remove sharp edges and high spots such as burrs with fine emery cloth or honing stone. Avoid getting emery dust in the bearings.

Do not apply any belt dressing unless it is recommended by the drive manufacturer. V-belts are designed for frictional contact between the grooves and sides of the belts. Dressing will reduce this friction.

Belt tension on an adjustable pitch drive is obtained by moving the motor, not by changing the pitch diameter of the adjustable sheave.

VIII. BEARING MAINTENANCE

Sealed Bearings

Sealed for life bearings are pre-lubricated with the correct amount of manufacturer approved ball bearing grease, and are designed for application where relubrication is not required.

Relubricatable Bearings

The motor bearings and fan bearings on belt drive fans should be greased at regular intervals. Motor manufacturers greasing instructions and recommendations should be followed closely. Avoid the use of a pressure greasing system which tends to fill the bearing chamber completely. **Do not over grease.**

NOTE: On motors with non-regreasable, sealed bearings, no lubrication is required for the life of the bearing.

Table #3 (page 4) lists the time intervals between fan greasing to insure proper lubrication in adverse conditions of heat and dust. Use only 1 or 2 shots with a hand gun in most cases. Maximum handgun rating 40 P.S.I.

IX. WARRANTY

Cincinnati Fan & Ventilator Company warrants products of its own manufacture against defects of material and workmanship under normal use and service for a period of eighteen (18) months from date of shipment or twelve (12) months from date of installation, whichever occurs first.

This warranty does not cover ordinary wear and tear, abuse, misuse, overloading, negligence, alteration or systems and/or materials not of Seller's manufacture. Expenses incurred by Buyer(s) in repairing or replacing any defective product will not be allowed except where authorized in writing and signed by an officer of the Seller.

The obligation of Seller under this warranty shall be limited to repairing or replacing F.O.B. Seller's plant, or allowing credit at Seller's option. This warranty is expressly in lieu of all other warranties expressed or implied including the warranties of merchantability and fitness for use and of all other obligations and liabilities of the Seller. The Buyer acknowledges that no other representations were made to him or relied upon him with respect to the quality or function of the products herein sold.

On equipment furnished by the Seller, but manufactured by others, such as motors, Seller extends the same warranty as Seller receives from the manufacturer thereof. Repairs for motors should be obtained from nearest authorized motor service station for the make of motor furnished. All motors used are products of well-known manufacturers with nationwide service facilities. Check the yellow pages of your telephone directory for the location of the nearest service shop.

Cincinnati Fan & Ventilator Company assumes no responsibility for material returned to our plant without our prior written permission.

X. ORDERING REPLACEMENT PARTS

Replacement or spare parts may be ordered through your local Cincinnati Fan representative. (Refer to drawings that begin on page 7.) The following information should accompany parts orders:

1. Motor horsepower, frame size, motor speed, voltage, phase, cycle and enclosure. Motor manufacturer's model number from motor nameplate.
2. Fan Speed (if V-belt driven).
3. Fan serial **and** model numbers from the **fan** nameplate and a complete description of the part.

An adequate stock of repair parts is maintained where possible. **If your fan is vital to production or to plant operation, it is advisable to have all spare parts on hand to minimize downtime.**

XI. TROUBLE SHOOTING

In the event that trouble is experienced in the field, the following are the most common fan difficulties. These points should be checked in order to prevent needless delay and expense.

1. CAPACITY OR PRESSURE BELOW RATING

a. Incorrect direction of wheel rotation.
b. Speed too slow.
c. Dampers not properly adjusted.
d. Poor fan inlet or outlet conditions (elbows, restrictions).
e. Air leaks in system.
f. Damaged wheel.
g. Total resistance of system higher than anticipated.
h. Wheel mounted backwards on shaft.
i. Fan not properly selected for a high temperature and/or high altitude application.

2. VIBRATION AND NOISE

a. Misalignment of bearings, coupling, wheel or V-belt drive.
b. Unstable foundation or supports.
c. Foreign material in fan causing unbalance.
d. Worn bearings.
e. Damaged wheel or motor.
f. Broken or loose bolts and set screws.
g. Bent shaft.
h. Worn coupling.
i. Fan wheel or drive unbalanced.
j. 120 cycle magnetic hum due to electrical input. Check for high or unbalanced voltage.
k. Fan delivering more than rated capacity.
l. Loose dampers.
m. Speed too high or fan rotating in wrong direction.
n. Vibration transmitted to fan from some other source.

3. OVERHEATED BEARINGS

a. Check bearing lubrication.
b. Poor alignment.
c. Damaged wheel or drive.
d. Bent shaft.
e. Abnormal end thrust.
f. Dirt in bearings.
g. Excessive belt tension.

4. OVERLOAD ON MOTOR

a. Speed too high.
b. Fan over capacity due to existing system resistance being lower than original rating.
c. Specific gravity or density of gas above design value.
d. Wrong direction of wheel rotation.
e. Shaft bent.
f. Poor belt alignment.
g. Wheel wedging or binding on fan housing.
h. Bearings improperly lubricated.
i. Motor improperly wired.
j. Defective motor. Motor must be tested by motor manufacturer's authorized repair shop.

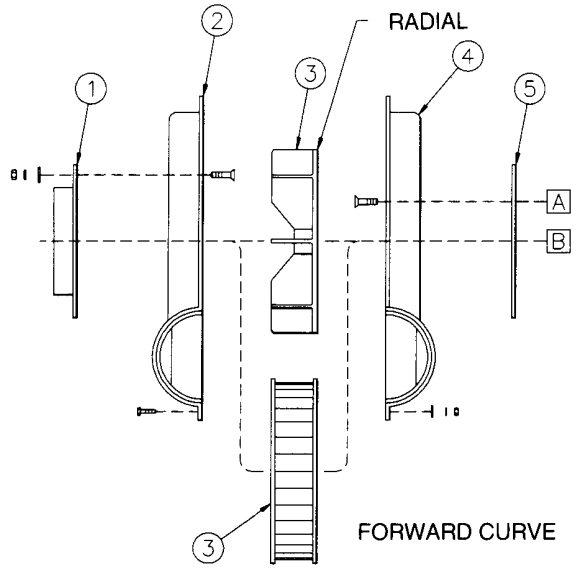

MODELS PB, SPB & LM
HOUSING/WHEEL COMPONENTS
All Arrangements

*1. Inlet side plate (if required).
*2. Housing, inlet side.
*3. Wheel (Radial or Forward Curve).
4. Housing, drive side.
5. Drive side plate (if required).

* NOTE: Rotation determined by viewing blower from drive side, not looking into inlet.

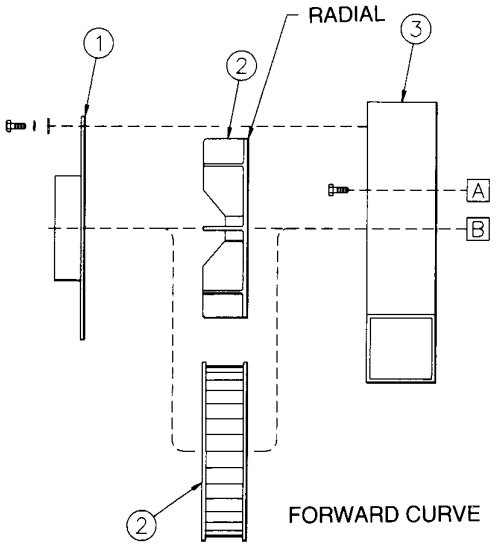

MODELS PBS
FABRICATED HOUSING/WHEEL COMPONENTS
All Arrangements

*1. Inlet side plate.
*2. Wheel (Radial or Forward Curve).
3. Housing, non-reversible (CW or CCW).

* NOTE: Rotation determined by viewing blower from drive side, **not** looking into inlet.

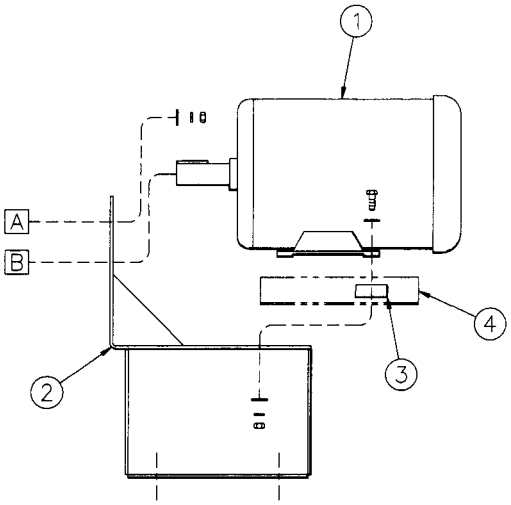

Arrangement 4 - Type 1
BASE COMPONENTS

1. Motor.
2. Combo base.
3. Riser blocks (if required).
4. Riser base, 1-3/4” (if required).

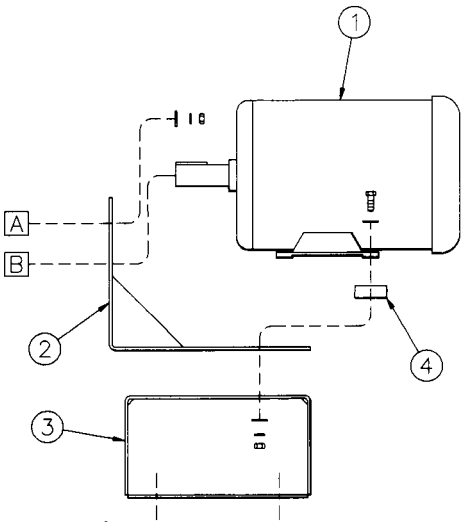

Arrangement 4 - Type 2
BASE COMPONENTS

1. Motor.
2. Angle bracket (if required).
3. Bottom base.
4. Riser base (if required).

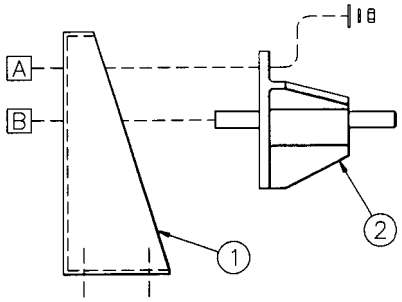

Arrangement 2

BASE COMPONENTS

1. Upright base.
2. Shaft/bearing assembly.

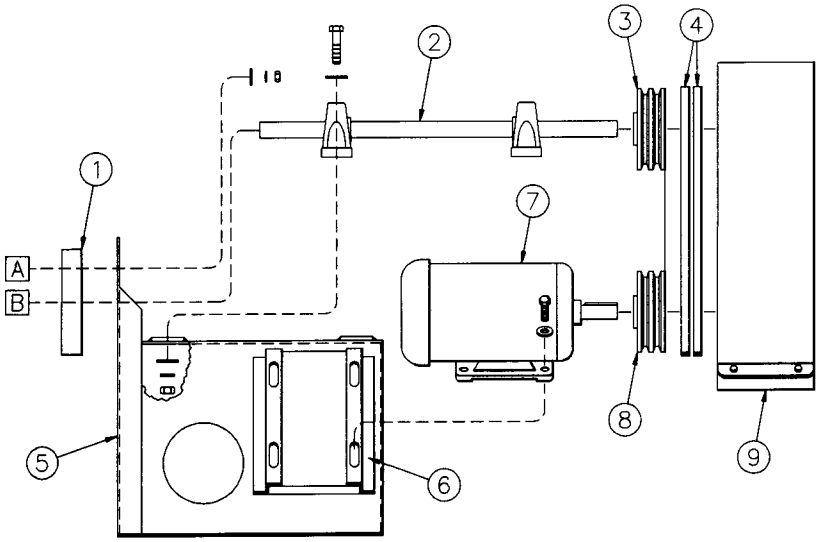

Arrangements 1 & 9

BASE COMPONENTS

1. Spacer ring (not required for PBS blowers).
2. Shaft/bearing assembly.
3. Fan sheave. (Arr. 9 only).
4. Belt(s). (Arr. 9 only).
5. Bearing base.
6. Motor slide base. (Arr. 9 only)
7. Motor. (Arr. 9 only)
8. Motor sheave. (Arr. 9 only).
9. Belt guard. (Arr. 9 only).

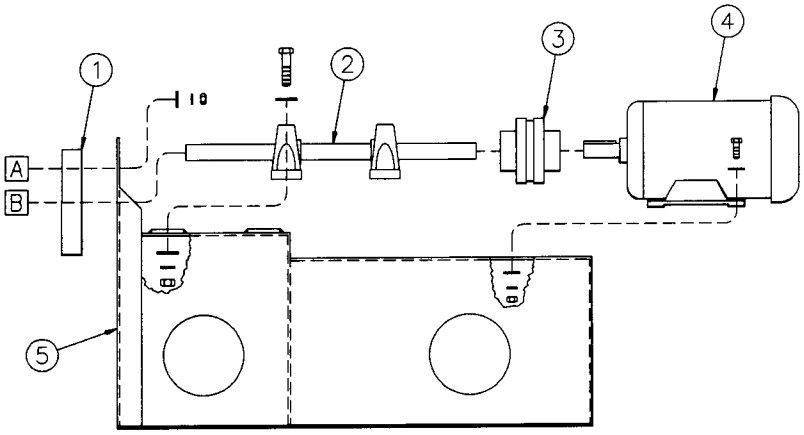

Arrangement 8

BASE COMPONENTS

1. Spacer ring (not required for PBS blowers).
2. Shaft/bearing assembly.
3. Shaft coupling.
4. Motor.
5. Base.

* INDICATES OPTIONAL FEATURE

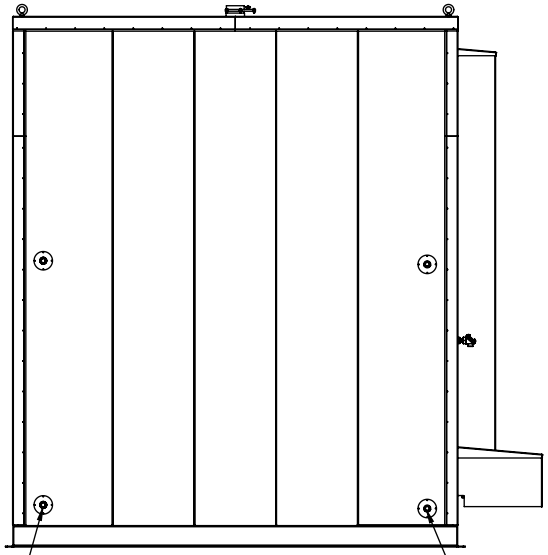

REAR ELEVATION

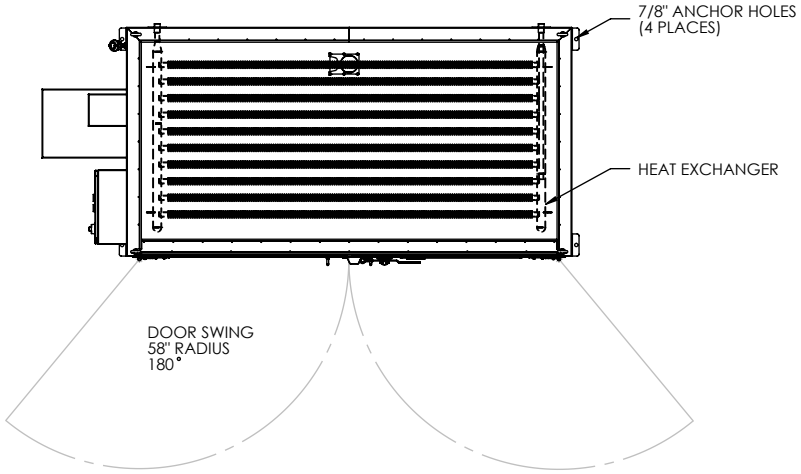

PLAN VIEW

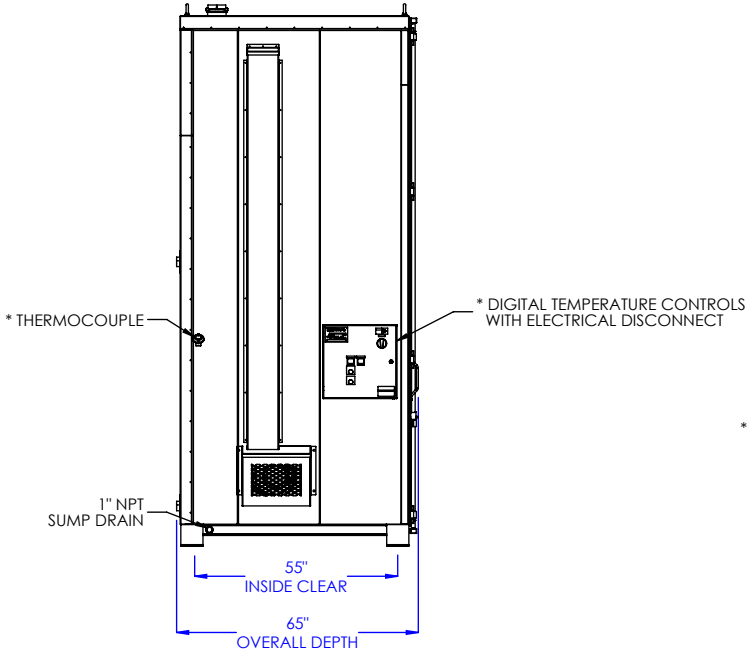

LEFT SIDE ELEVATION

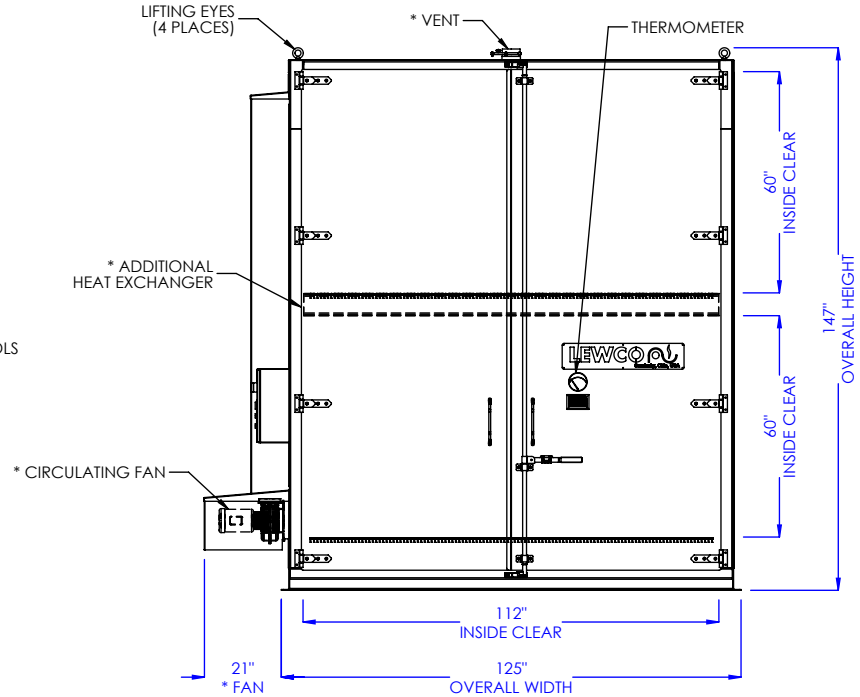

FRONT ELEVATION

MODEL: SC4TV

DESCRIPTION: STEAM/ THERMAL FLUID HEATING CABINET, 4 TOTE, MULTI-LEVEL

LEWCO, INC. IS COMMITTED TO CONTINUOUS IMPROVEMENT AND RESERVES THE RIGHT TO CHANGE DESIGNS AND SPECIFICATIONS WITHOUT NOTICE.

THIS DRAWING MUST NOT BE COPIED, REPRODUCED OR USED FOR ANY PURPOSE WITHOUT THE WRITTEN CONSENT OF LEWCO, INC. ALL RIGHTS RESERVED.

DATE:	9/22/2016
REV.	001
PAGE:	1 of 1

LEWCO

706 LANE ST. SANDUSKY, OH 44870, U.S.A.