DESIGN DATA	DESIGN PRESSURE	TEST PRESSURE	DESIGN TEMPERATURE
TUBESIDE	150 psi	300 psi	350 °F
SHELLSIDE	300 psi	450 psi	350 °F

MIN. DESIGN METAL TEMP −20°F

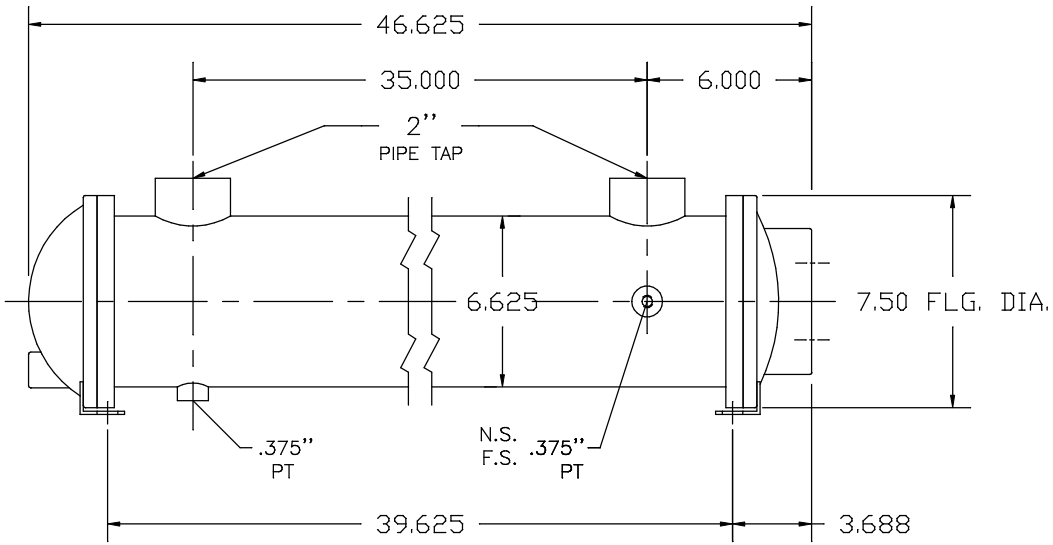

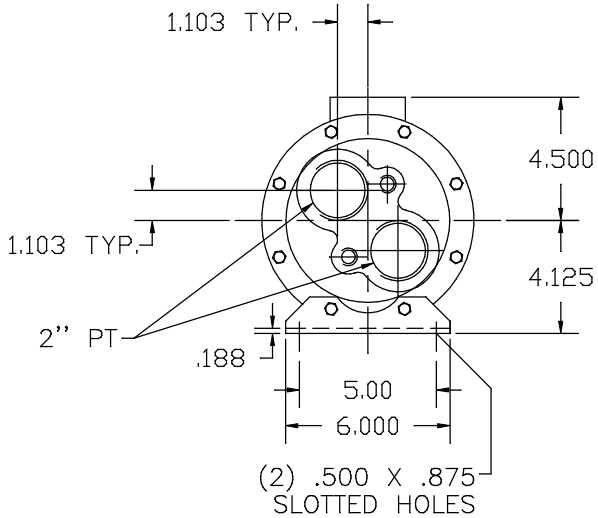

ITEM NO.	QUAN. REQ.D	DESCRIPTION	MATL. & SPEC.	SIZES / PATTERN NO.	DRAWING NUMBER	DWG. SIZE
9	16	HEX NUT	CARBON STEEL	.375 − 16 UNC-2B	2−122−5−00−901−03	A
8	16	STUD 1.75	STEEL ALLOY	.375 − 16 UNC-2A x TFL	2−012−5−06−901−07	A
7	2	PIPE PLUGS	BRASS	.5" PT	2−135−6−90−901−04	A
6	2	SUPPORT FOOT	STEEL		3−425−5−06−101−03	B
5	1	GASKET	COMP. FIBER		3−299−8−06−110−01	A
4	1	GASKET	COMP. FIBER		3−298−8−06−110−01	A
3	1	BONNET REVERSE	CAST IRON S−02−01−02		3−104−7−06−815−01	B
2	1	BONNET 2" NPT	CAST IRON S−02−01−02		3−087−7−06−115−01	C
1	1	CORE ASSEMBLY			4−484−06−042−004	A

Rev.#	REVISIONS	DATE
1	COMPLETED BOM GLB	11/12/07

This document contains material and / or information which is the property of ITT Industries Inc., and supplied only on a confidential basis. No transmittal or disclosure shall be made to any person, firm or corporation without prior written approval of ITT Industries Inc., or its ITT Heat Transfer Technology unit.

ALL DIMENSIONS ARE IN INCHES

MADE : GLB DATE :11/1/07
CHECK : GLB DATE :11/1/07
ORDER NO. : 992340−41
QUANTITY : 1
LDF :
SCALE: 0.145 "=1.000"

Standard
ITT Industries
Buffalo, NY U.S.A.

TITLE 06042 SX2000−C EXCHANGER − 2 PASS

SIZE	DRAWING NUMBER	REV.
A	5−137−06−042−003	1