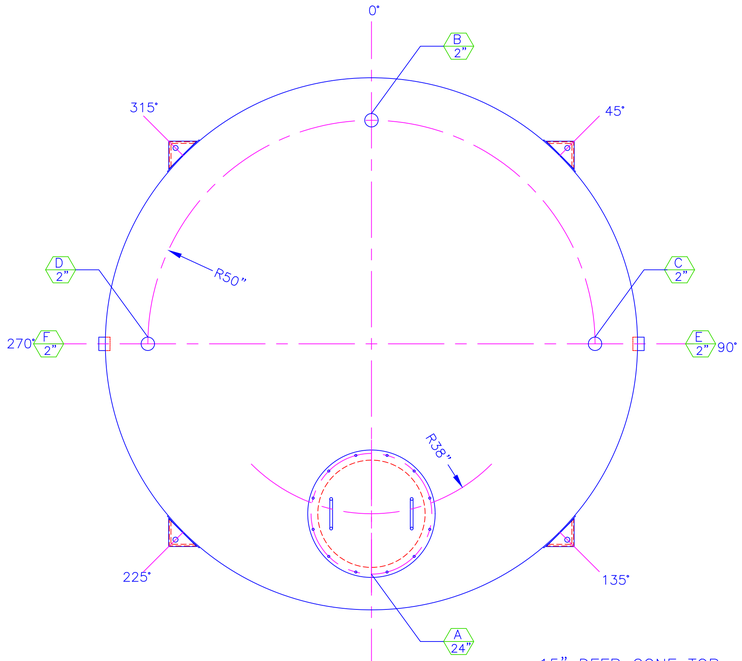

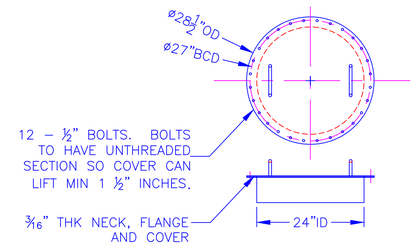

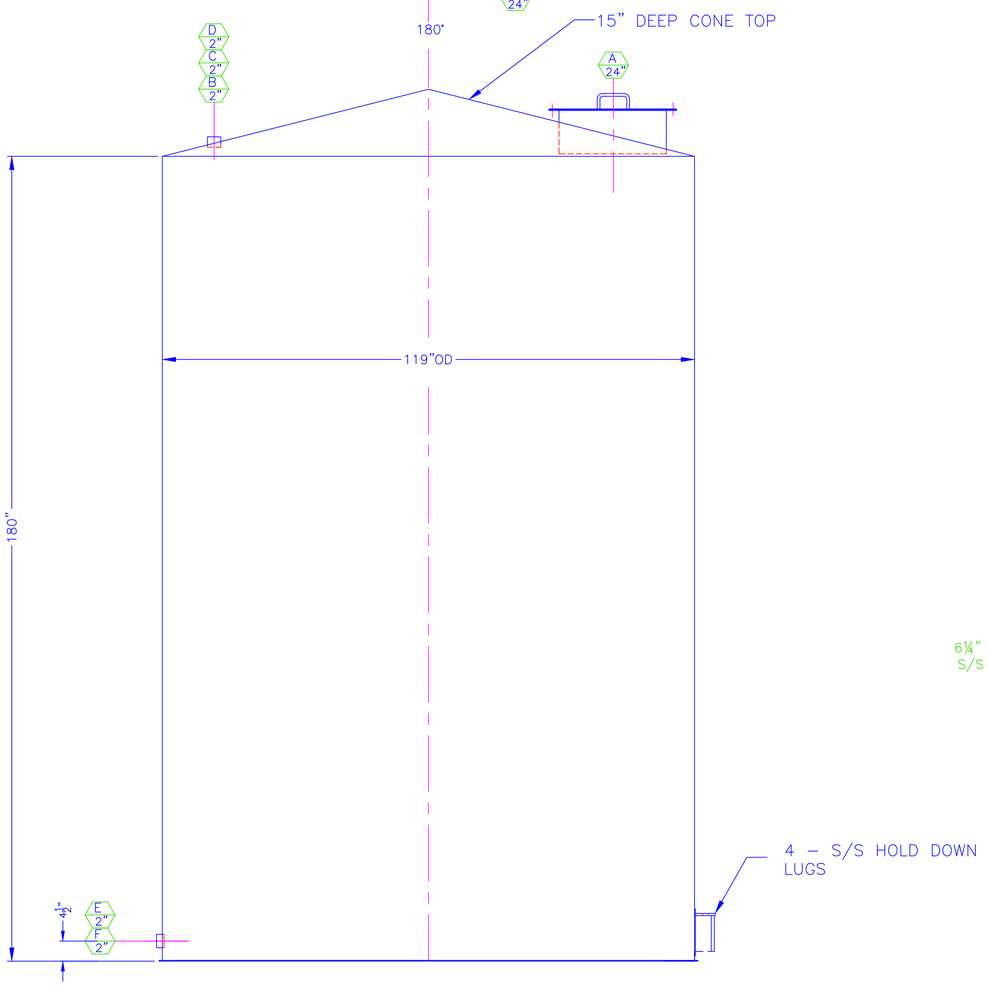

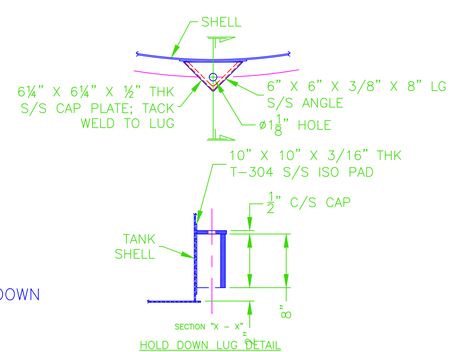

NOZZLE SCHEDULE

MK.	SIZE	QUAN.	NOZZLE FLANGE TYPE	NOZZLE FLANGE RATG.	NOZZLE FLANGE MAT'L	NECK SCH.	NECK MAT'L	PROJ.	ORIENT.	SERVICE
A	24"	ONE	MANWAY			3/16"	T-316L	6"	180°	MW / EMERG. VENT
B	2"	ONE	HCPG	3000#	T-316L	---	---	---	0°	NORMAL VENT
C	2"	ONE	HCPG	3000#	T-316L	---	---	---	90°	
D	2"	ONE	HCPG	3000#	T-316L	---	---	---	270°	
E	2"	ONE	HCPG	3000#	T-316L	---	---	---	90°	
F	2"	ONE	HCPG	3000#	T-316L	---	---	---	270°	

Wolfe Mechanical and Equipment Co., Inc.
P.O. Box 276 • Lugoff, S.C. 29078 • Phone 803-438-1093

VESSEL: M.A.W.P. ATM PSI@ 0-150 F°
JACKET: M.A.W.P. N/A PSI@ N/A F°
MFGRS SN: 5003A, B, C YR. BUILT 2012
MAT'L VESSEL T-316L JACKET N/A
MAX.SP.GR. 1.0 CAPACITY(GAL) 8500
EQUIP NO. (SEE BELOW)

5003A – ST17
5003B – ST18
5003C – ST19

DESIGN DATA

DESIGN CONDITIONS:
SHELL ATM PSIG 0 TO 150 °F
JACKET N/A PSIG N/A °F
OPERATING CONDITIONS:
SHELL ATM PSIG 0 TO 150 °F
JACKET N/A PSIG N/A °F
SPECIFIED CORROSION ALLOWANCE: 0.00"
CODE: UL-142 STAMP: UL LABEL
STRESS RELIEF: NO RADIOGRAPH: NO
SPEC. GRAVITY 1
TYPE HEADS: SHELL FLAT BOTTOM, CONE TOP
JACKET N/A
TYPE SUPPORT: N/A
JOINT EFF:
VESSEL - HEAD 70% SHELL: 70%
JACKET - HEAD N/A SHELL: N/A
SHIPPING WT.: 4000 POUNDS TEST WT.: 74,890 POUNDS
CAPACITY: 8500 GALLONS
HYDROSTATIC TEST:
SHELL 1.5 PSIG PNEUMATIC
JACKET N/A PSIG N/A

MATERIALS

SHELL: SHELL 3/16" THK SA-240-316L S/S
JACKET N/A
HEADS: SHELL 11 GA SA-240-316L S/S
JACKET N/A
FLANGE SPEC.: SA-182F-316L S/S
EXTERNAL PIPE SPEC.: SA-312-316L S/S
INTERNAL PIPE SPEC.: N/A
CLADDING OR LINING SPEC.: N/A
BOLTING: N/A
GASKETS: N/A
INTERNALS: N/A
SUPPORTS: N/A
INSULATION: N/A
PAINTING: N/A

THIS MANHOLE IS PROVIDED WITH LONG BOLTS TO PERMIT EMERGENCY RELIEF VENTING. DO NOT REPLACE WITH SHORTER BOLTS.

MANWAY PLACARD
(INSTALLED ON MANWAY)

THIS TANK IS INTENDED FOR STATIONARY INSTALLATION ONLY

TANK INSTALLATION PLACARD
(LOCATED UNDER NAME TAG)

NOTES

1. COVER ALL FLANGES, OPENINGS AND MACHINED SURFACES PRIOR TO SHIPMENT UNLESS OTHERWISE NOTED.
2. NOZZLE BOLT HOLES SHALL STRADDLE 0–180 CENTERLINE OR ITS PARALLEL UNLESS OTHERWISE NOTED.
3. ALL INTERIOR WELDS TO BE GROUND CLEAN W/ 36 GRIT SOFT DISC.
4. EXTERIOR WELDS TO BE SANDBLASTED.
5. INTERIOR & EXTERIOR TO BE CLEANED & DESCALED WITH 10% PHOSPHORIC ACID AND RINSED WITH AMBIENT WATER.
6. ALL ISO PADS TO HAVE 1" RADIUS ON CORNERS.
7. ALL REPADS AND ISO PADS TO HAVE 1/8" NPT DRILLED AND TAPPED HOLE.

REVISION	DATE
1	02/06/12 CC
2	02/10/12 JBO

Wolfe Mechanical and Equipment Co., Inc.
P.O. Box 276 ~ Lugoff, SC 29078
Phone 803-438-1093 ~ Fax No. 803-438-5265

SCALE: 3/4"=1' QUANTITY: THREE DRAWN BY: CJC
DATE: 01/19/12 MATERIAL: T-316L

8500 GALLON TANK

RIADA

DRAWING NUMBER 5003