KLAUS UNION

SERIAL NUMBER(S):
P00060317

PUMP DATA:	
MODEL	SLM-AVO-1.5X1X6-09E03
SIZE	1.5 X 1 X 6
SUCT. FLG.	1.5", 150# RF
DISCH. FLG.	1.0", 150# RF
DRAIN CONN.	1/2", 150# RF

MOTOR DATA:	
MFG	TECO-
	WESTINGHOUSE
HP	7.5
RPM	3600
ENCL	TEFC
FRAME	213T
PH/HZ	3/60
VOLTS	460

NOTES:
COUPLING: REXNORD OMEGA ES3R
PT-100 TEMPERATURE PROBE
PMP-25 POWER MONITOR
DOUBLE ISOLATION SHELL
EQUIPPED WITH CDS SYSTEM

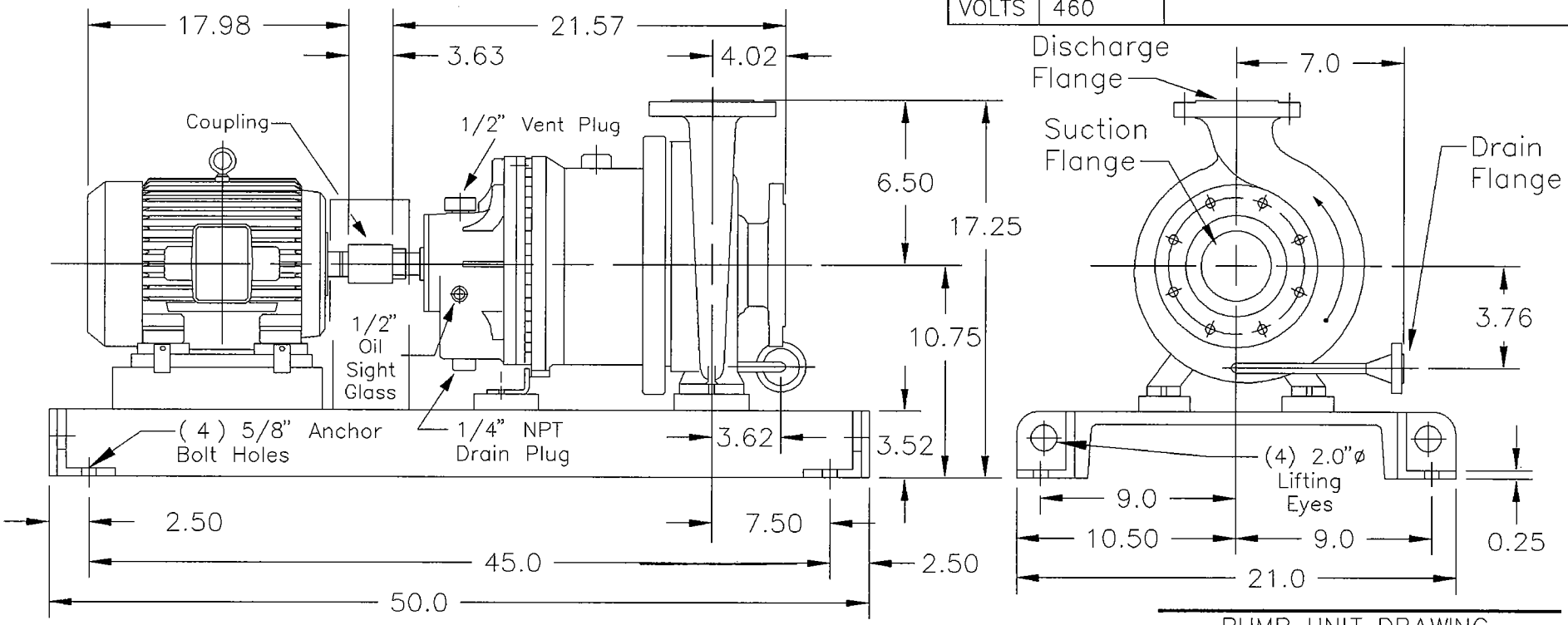

ALL DIMENSIONS ±1/8" UNLESS OTHERWISE NOTED.

CERTIFIED CORRECT:
DATE: 3-20-06
BY:

REV.	DATE	COMMENTS

PUMP UNIT DRAWING	
CUSTOMER	DEGUSSA CORPORATION
ENG. CONTR.	
PROJECT NO.	C0150.10002
P.O. NO.	4500164995
ITEM NO.	3053.00
KU JOB NO.	06-007
EST. WEIGHT	575 lbs
DWG.CODE NO:	
DRAWING NO.	06-007-3053.Dwg
DATE	18-MAR-2006