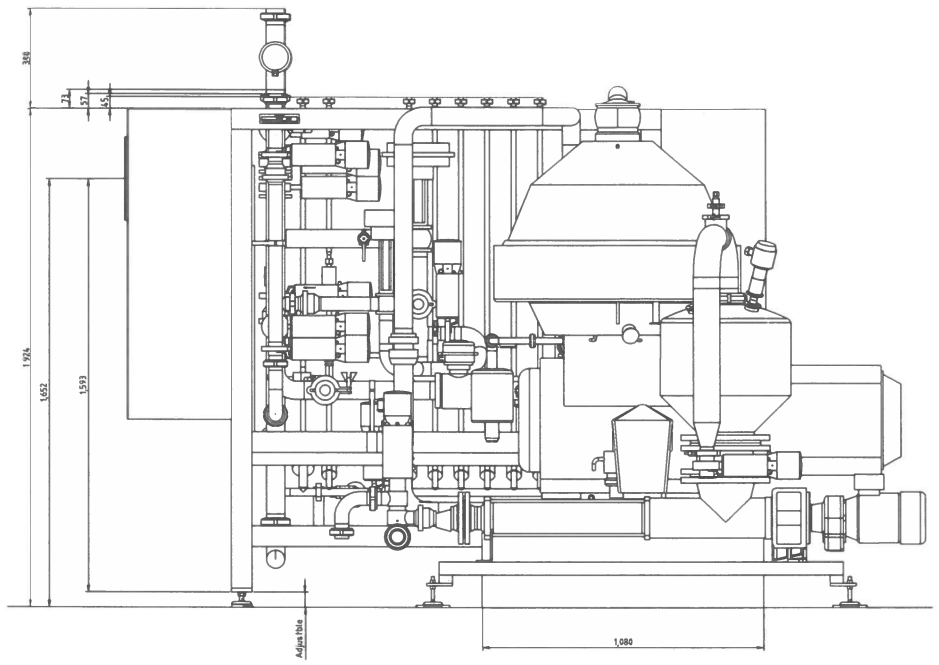

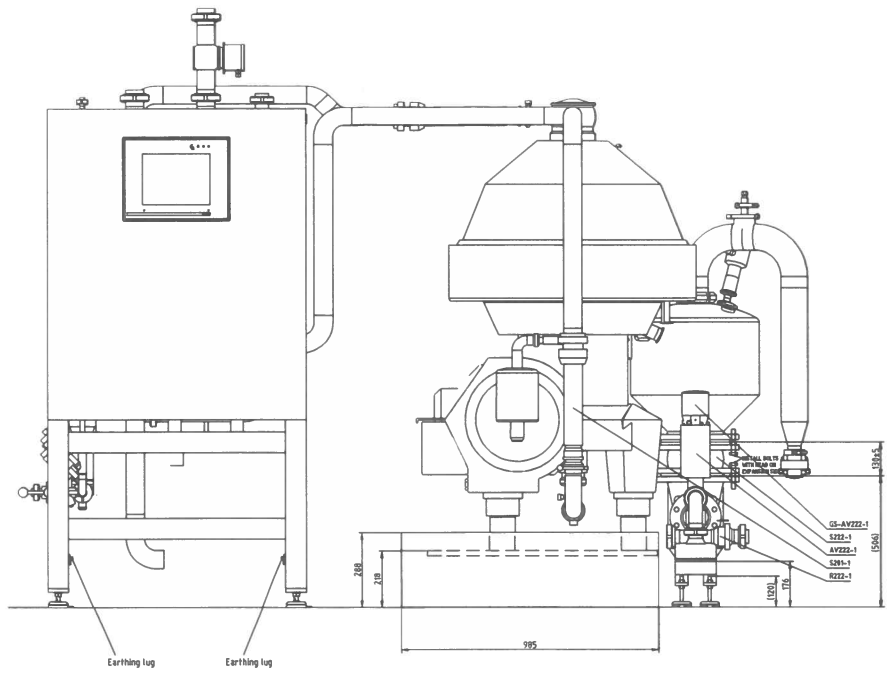

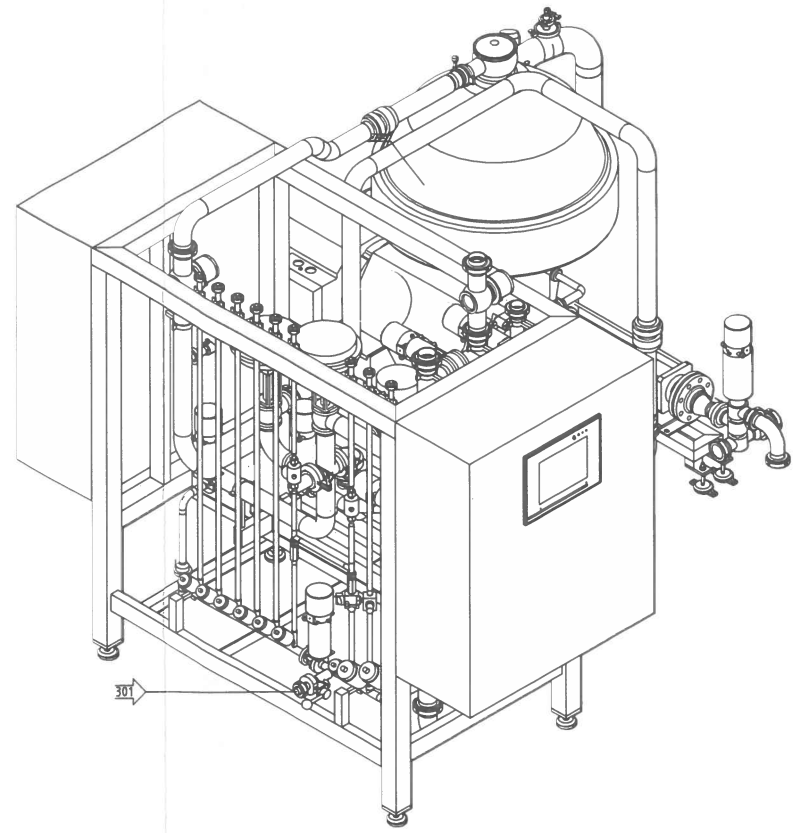

Media connection dimension tolerance: ±15 mm

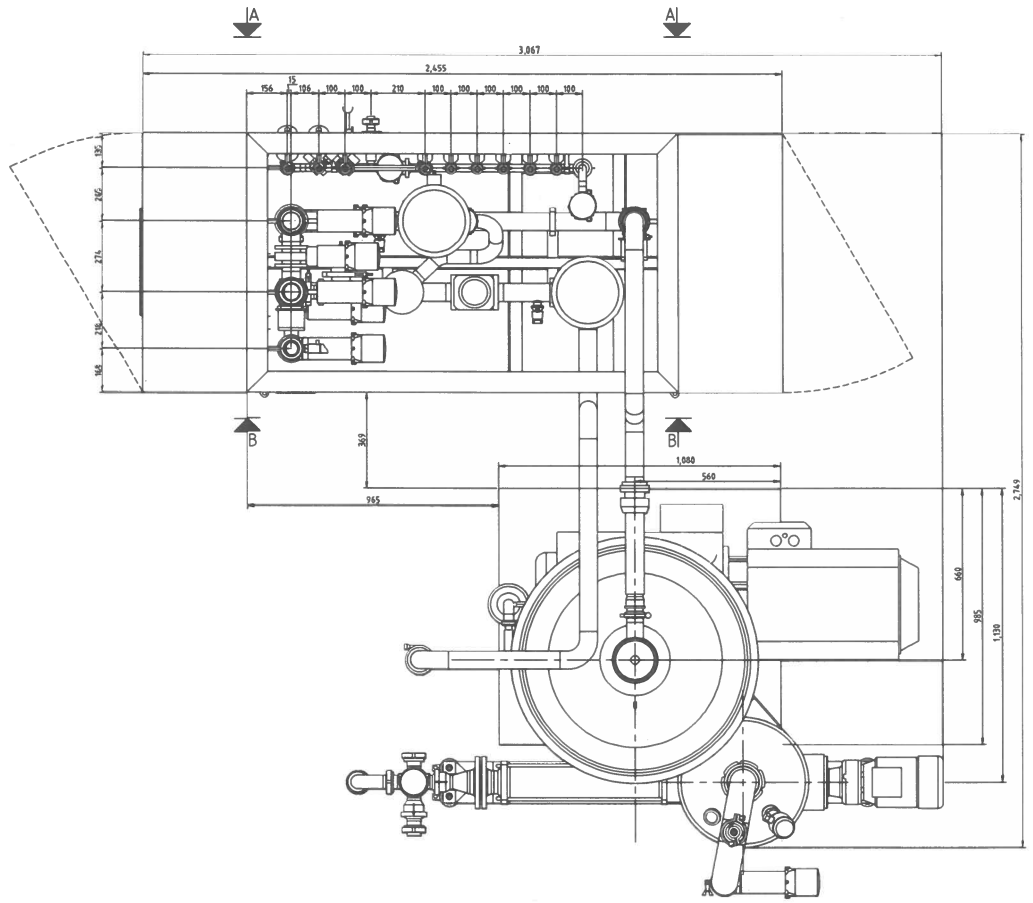

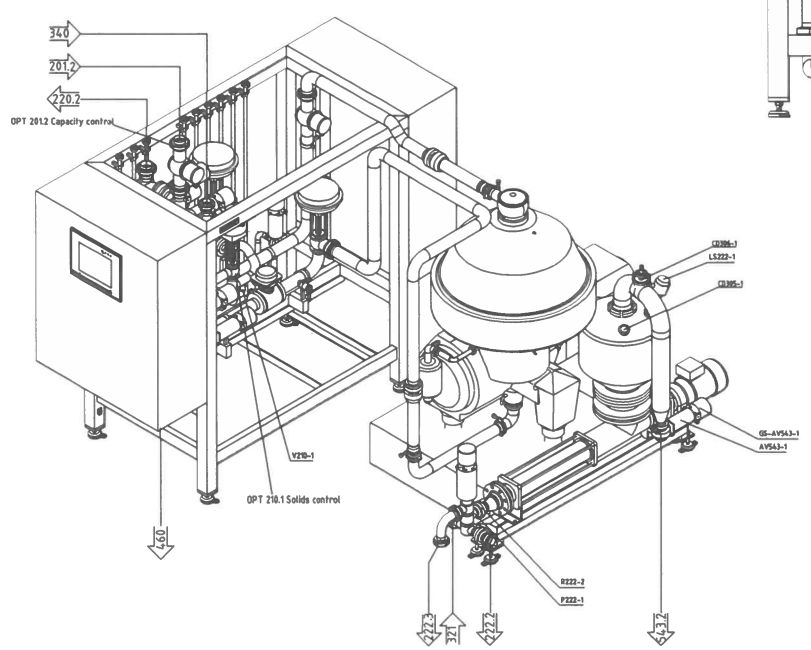

B-B

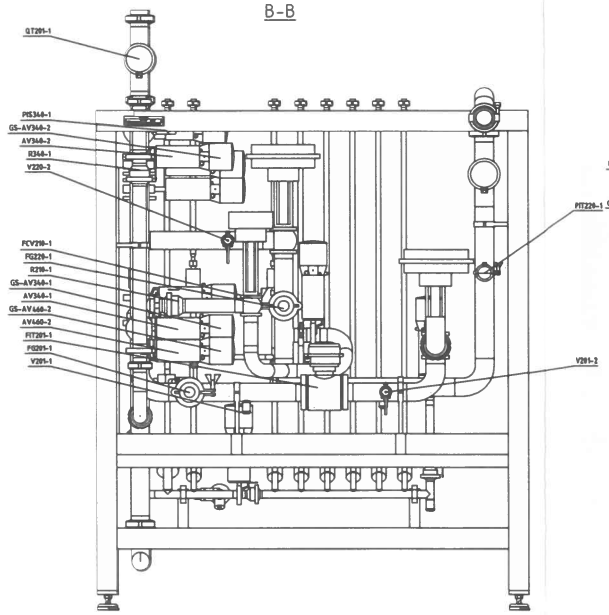

A-A

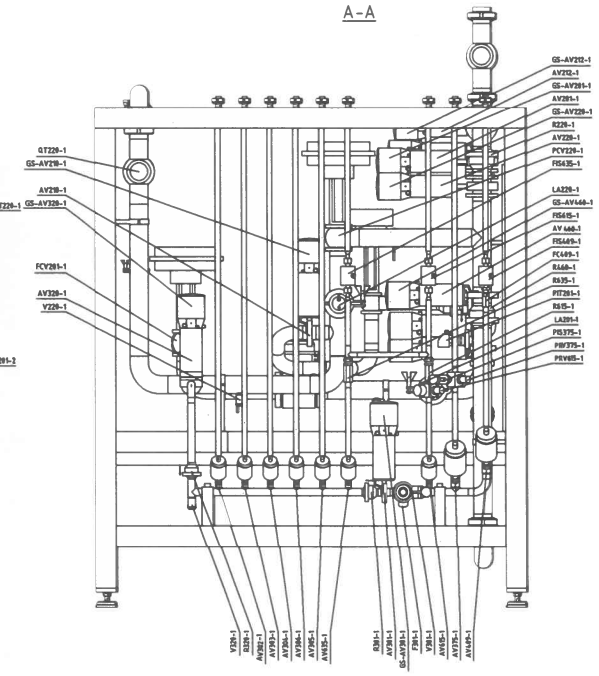

Qty	Item	Article No.	Name/Designation	Material/Remarks
1	15	9661652463	LIFTING INSTRUCTION BREW MODULE	
1	14	9661938990-80	SPRAY BALL ADAPTER-CD306	ONLY FOR MANUFACTURING
1	13	9661935609-81	SPRAY BALL ADAPTER-CD305	ONLY FOR MANUFACTURING
1	12	9680507156-80	DEAIRATION PIPE BREW HSS	ONLY FOR MANUFACTURING
1	11	9680507265-80	OPT 201.2 CAPACITY CONTROL DN65	ONLY FOR MANUFACTURING
1	10	9680507254-80	OPT 210.1 SOLIDS CONTROL	ONLY FOR MANUFACTURING
1	9	9662198014-80	SOLIDS RECEIVING UNIT SCREW PUMP	ONLY FOR MANUFACTURING
1	8	9660003601-81	SERVICE LIQUID UNIT BREW MODULE	ONLY FOR MANUFACTURING
1	7	9660003600-80	LINE 340 BREW MODULE	ONLY FOR MANUFACTURING
1	6	9660003790-80	LINE 220 DN65 BREW MODULE	ONLY FOR MANUFACTURING
1	5	9660003789-80	LINE 201 DN65 BREW MODULE	ONLY FOR MANUFACTURING
1	4	9660003788-80	FRAME DN65	ONLY FOR MANUFACTURING
1	3	9662135916-80	PUMP FRAME	ONLY FOR MANUFACTURING
1	2	9662135914	COMPONENT LIST	
1	1	9662135913	P&ID BREW 350 DN65	

Rev No	Revision text	Date	Drawn	Checked	Appr.
1.0	Initial Revision	2023-01-27	SETUVKAA	SETUKRDH	SETUAAMM

9662135915-80 Assembly no.

Title: LAYOUT BREW 350 - DN65

Location	Size	Dimensions without tolerances:
Alfa Laval Tumba AB	A0	ISO 13920-B, ISO 2768-M

Date	Drawn	Proj. No	Proj. Type	Proj. Name	Scale	Sheet	Drawing No	Rev
2022-01-16	SETUVKAA	26359	BU HSS	ABI PORTSMOUTH	1:10	1 OF 1	9662135915	1.0

ISO Method E

Connection		
Connection Number	Connection type and size	Media
201.2	Union DIN11851 - DN65	Product inlet
220.2	Union DIN11851 - DN65	Product outlet
222.2	Union DIN11851 - DN50	Solids outlet
301	Union DIN11851 - DN25	Water inlet
321	DIN11851 - DN50	CIP inlet
222.3	Union DIN11851 - DN50	Drain solids pump
340	Union DIN11851 - DN50	Process water
4.60	Weld end DIN11850-2 - DN65	System drain
543.2	Weld end DIN11850-2 - DN50	Ventilation / drain

This document contains information belonging to Alfa Laval. It may not be copied or disclosed to third parties without the consent of Alfa Laval.
Reproduction of this document in any form without prior written permission is forbidden.
The information contained in this document is intended only for the person or entity to which it is addressed and may contain confidential and/or privileged material. Any review, retransmission, dissemination or other use of, or taking of any action in reliance upon, this information by persons or entities other than the intended recipient is prohibited. If you receive this in error, please contact the sender and delete the material from any computer.