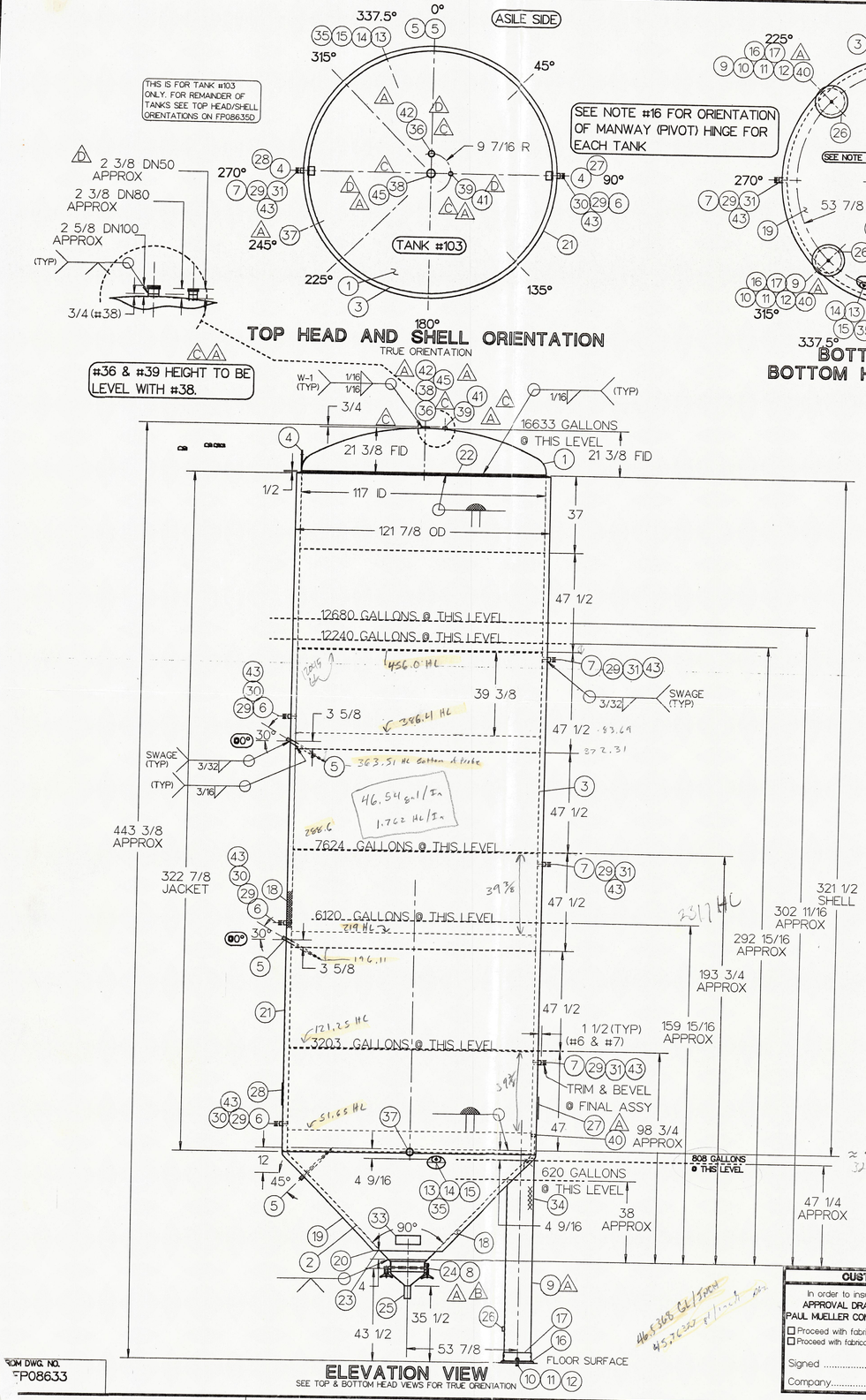

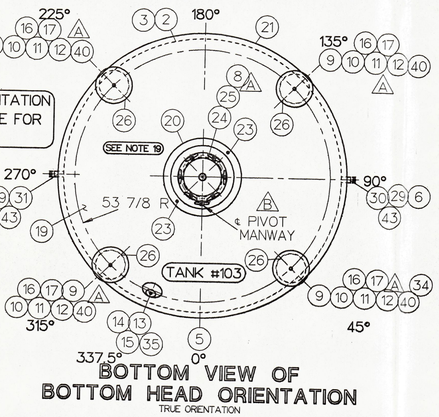

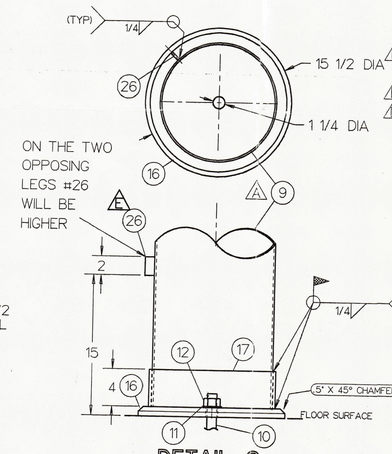

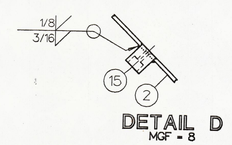

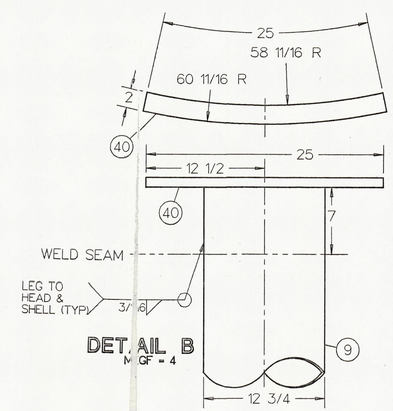

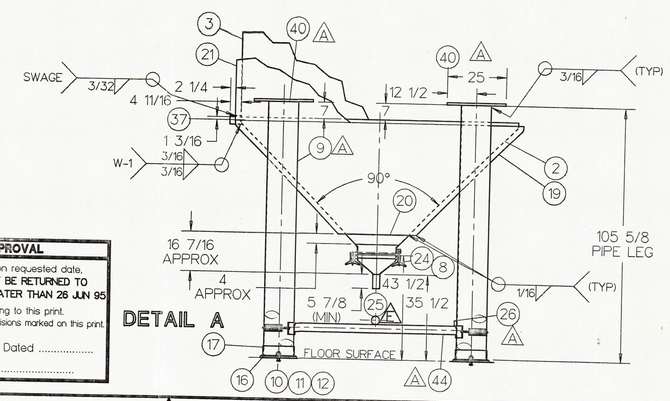

CUST NO.	ITEM NO.	NO. REQ'D	PART NO.	DESCRIPTI(	DRAWING NO.
		1	100/200	TANK ASSY 16,600 GAL MODEL "F" SPIAL CONE BOTTOM	FP08633 D
	1	1	101/201	HEAD TOP 10GA 304 S/S ASME F&D 8: 1"SF (146)	
	2	1	102/202	HEAD BOT INNER 7GA 304 S/S 90° CC 2'KR 1.5"SF (9827620)	
	3	1	103/147	SHELL ASSY 10GA 304 S/S W/20GA 304 S/SFLATED TEMP-PL UPPER BANDS	FP08634 D
				AND 7GA 304 S/S W/18GA 304 S/S INATED TEMP-PL LOWER BAND	
	4	2	9901259	LUG LIFTING ASSY SVW S/S .25 & .25"TH304 MAT'L. 9000# CAPACITY	9000480 B
	5	3	9824639	WELL ASSY THERM .75"NPT 316L S/S L 20.625"	
	6	3	(REF)	CONN TP-PL INLET 1.5" 304 S/S SCH PIPE 6"LG TOE(9801781)	FP08634 D
	7	3	(REF)	CONN TP-PL OUTLET 1.5" 304 S/S SC40 PIPE 6"LG TOE(9801781)	FP08634 D
A	8	1	9822772	COLLAR ASSY MANWAY 16" 304 S/S WLANGE & SWIVEL LUG 2B/2S	9500533 B
A	9	4		LEG 12" 304 S/S SCH 10 PIPE	9000263 B
	10	4	CUST FURN	TIE DOWN BOLT 1-8NC (CUSTOMER SUPLIED/INSTALLED)	
	11	4	CUST FURN	WASHER FLAT 1" (CUSTOMER SUPPLIEDISTALLED)	
	12	4	CUST FURN	NUT HEAVY HEX 1-8NC (CUSTOMER SUPLIED/INSTALLED)	
	13	1	9803210	TRYCOCK PERLICK .25" 316 S/S F-2785-SS	9900633 A
	14	1	9802383	GASKET FIBER PERLICK F-11284-1	9900633 A
	15	1	9802384	ADAPTER WELD IN .25" 304 S/S	DETAIL D
	16	4	116	BASE PLATE 1"THK 15.5"OD W/1.25"ID 3(S/S	
	17	4	117	LEG COLLAR 304 S/S .25"THK X 4"HIGHW/12.875"ID	
	18	A/R	9902473	INSULATION 2" URETHANE 2' X 4' GROO'D	
	19	1	9827621	HEAD OUT BOT 12GA 304 S/S 90° CON 2"KR 1"SF	
	20	1	9827623	RING ENCLOSURE .1875"NOM 304 S/S 3:8125"OD x 26.8125"ID	
A	21	2	121	JACKET SECTIONS 12GA 304 S/S	
	22	1	9827637	BREAST RING 14GA 304 S/S	9000582 C
	23	2	9901490	VENT ASSY JACKET 1"DIA 304 S/S	9901490 A
B	24	1	9827803	COMPONENT ASSY MANWAY REDHOOK 1" 304 S/S 2B/2S W/GASKET	
	25	1	125	TUBE 3"OD X .065"W 304 S/S POLISHED ID 6"LONG (OUTLET)	
E	26	4	126	LUG LEVELING .25"THK 304 S/S 1"W X 2"LG	
	27	1	3743	PLATE NAME PROCESS 2.175" X 9.5" 22GA 304 S/S	
	28	1	9803082	PLATE DATA MUELLER FOIL 3.75" X 5.23" X .003"THK W/PRESSURE	
	29	6	9808631	LABEL CAUTION USE BACKUP WRENCH 3" X 2" LABEL BLUE W/WHITE LETTERING	
	30	3	9901403	LABEL "IN" .5" X 1.5" SILVER W/BLUE LETTERING POLY-STIK-S .005"THK	
	31	3	9901404	LABEL "OUT" .5" X 1.5" SILVER W/BLUE LETTERING POLY-STIK-S .005"THK	
	32	1	9900380	ENVELOPE ASSY INSTRUCT SINGLE WALL TANK	
	33	1	9900362	PLATE CAUTION PRESSURE "CAUTION: THIS VESSEL MUST BE PROPERLY	
	34	1		PERMANENT STAMPED SERIAL NUMBER	
	35	1	9827639	RECESS COLLAR 14GA 304 S/S W/31"ID	9900064 A
D C A	36	1	080	EXTENSION DN80 304 S/S 3.427"OD X 1.25"LG (TOP HEAD)	
A	37	1	137	PIPE STUB 3"SCH 10 304 S/S BEVEL END	
D C A	38	1	010	EXTENSION DN100 304 S/S 4.179"OD X 2"LG (TOP HEAD)	
D C A	39	1	050	EXTENSION DN050 304 S/S 2.170"OD X 1.25"LG (TOP HEAD)	
A	40	4	140	CAP LEG SUPPORT 1"THK X 2" X 25"LG 304 S/S	DETAIL B
	41	1	002	FITTING METRIC 304 S/S (CUSTOMER SUPPLIED DIN50-TOP HEAD)	
	42	1	004	FITTING METRIC 304 S/S (CUSTOMER SUPPLIED DIN80-TOP HEAD)	NOTE 17
	43	6	9824549	LABEL ATTENTION "CUSTOMER" 1.75"X3.5"X.005"THK MYLAR W/3M#468	
	44	1	153	LEG HOLDING JIG FOR REDHOOK 16,600 GAL TANKS	FP08723 C
	45	1	005	FITTING METRIC 304 S/S (CUSTOMER SUPPLIED DIN100-TOP HEAD)	

NOTES:

1. ALL MATERIALS OR COMPONENT PARTS CALLED OUT ON THIS DRAWING SHALL BE AS SPECIFIED "OR APPROVED EQUAL".
2. DIMENSIONS, UNLESS OTHERWISE INDICATED, ARE NOMINAL AND STANDARD SHOP TOLERANCES ARE TO BE EXPECTED. (ENPE 222) MEASUREMENTS FOR ANY FIELD ATTACHMENTS SHOULD BE VERIFIED ON SITE BY OTHERS BEFORE FABRICATION OF THE ATTACHMENTS.
3. CORROSION DISCLAIMER
   PAUL MUELLER COMPANY IS NOT RESPONSIBLE FOR CORROSION OR SUITABILITY FOR USE OF ANY MATERIAL IN ANY PARTICULAR APPLICATION ! THE CORROSION RESISTANCE AND SUITABILITY FOR USE OF A MATERIAL IS DEPENDENT ON OPERATING ENVIRONMENT AND CONDITIONS, CLEANING PRACTICES, AND MANY OTHER FACTORS BEYOND THE CONTROL OF THE EQUIPMENT FABRICATOR. THE USER OF THE EQUIPMENT BEARS TOTAL RESPONSIBILITY FOR CORROSION OR SUITABILITY FOR USE OF ALL MATERIALS IN THEIR PARTICULAR APPLICATION !
4. ALL FLANGES WILL HAVE BOLT HOLES STRADDLE THE 0°-180° & 90°-270° CENTER LINES, UNLESS SPECIFIED OTHERWISE.
5. VESSEL TO BE VENTED FOR SHIPMENT.
6. ALL DIMENSIONS ARE IN INCHES UNLESS SPECIFIED OTHERWISE.
7. ALL WELD SIZES ARE MINIMUM AFTER GRINDING.
8. SUITABLE PRESSURE RELIEF VALVE MUST BE INSTALLED BY CUSTOMER FOR TEMP-PLATE OPERATION.
9. SUITABLE PRESSURE AND/OR VACUUM RELIEF VALVE MUST BE INSTALLED BY CUSTOMER FOR VESSEL OPERATION.
10. PRODUCT SPECIFIC GRAVITY: 1.0135-1.0560
11. REMOVE HEAT TINT FROM VESSEL INTERIOR WITH SHEET POLISHER.
12. VESSEL DESIGNED FOR SEISMIC ZONE #2A.
13. ENTIRE CONE (ITEM #19), LEGS (ITEM #9), FOOT ASSY (ITEM #17), FOOT PADS (ITEM #16), AND MANWAY ASSY (ITEM #24) ARE TO BE GLASS BEAD BLASTED (GB).
14. NO ESCUTCHEON PLATES ARE TO BE USED ON THESE TANKS.
15. THESE TANKS ARE TO BE INSTALLED IN A NEW PLANT AND WILL BE THE "SHOW PLACE". PLEASE USE EXTRA CARE DURING PRODUCTION FOR TOP QUALITY RESULTS.
16.
17. ITEM 42 TO BE ASSY FITTING FOR #36 & 38. CUSTOMER SUPPLIED (METRIC SIZE 304 S/S) AND MAILED TO SALES FOR INSTALLATION BY PMCO.
18. INSULATION (ITEM 18) IN BOTTOM CONE TO BE INSTALLED USING "PIN" METHOD.
19. STAMP TANK NUMBER (THREE DIGIT) AT HINGE POINT ON MANWAY.

CUSTOMER APPROVAL

In order to insure delivery on requested date, APPROVAL DRAWINGS MUST BE RETURNED TO PAUL MUELLER COMPANY NO LATER THAN 26 JUN 95

☐ Proceed with fabrication according to this print.
☐ Proceed with fabrication making revisions marked on this print.

Signed ..... Dated .....

Company.....

E	Per FAX dd10-6-95 & 10-9-95 UPDATED #26= DELETED FIELD WELD ON DET C.	RJ	10-23-95
D	ITEM #38 HAS ELEV OF 3/4", #36 & 39 TO BE LEVEL. W/#38= ADD FITTING ELEV DETAIL	RJ	10-3-95
C	Per RJ/ENG: #36,38 & 39 DN EXT WERE TUBE.	RJ	9-1-95
B	PER FAX DTD 8-4-95: RELOCATE #13,14,15 & 35 #36,38 & 39HOLDWAMWAY HINGE 9 OF	RJ	8-7-95
A	Per FAX 7/18/95 @ 10:57: NEW DWG FOR #44=SHOW #44 IN DET A= MOVE #37 TO 245° WAS 0°=#36.3"TUBE WAS 3"PIPE =#38.4"TUBE =#39.2"TUBE= #41DIN 50 #42DIN 80 =#45DIN 100=#40 BAR WAS PAD=	RJ	7-31-95
	REDESIGN DETAIL B:Per ED/LO ADD 3 DIGIT P/N= ADD #5= #21N/R 2 WAS 1#LEG 105 5/8 WAS 105 1/8. RELEASED PER P.HENDRICKSON & W/O CUST APP.		
SYM	CHANGE	BY	DATE

REVISIONS

MATERIAL FINISHES

INTERIOR	2B/NOTE #11	EXTERIOR	2B/NOTE #13

WELD FINISHES

INTERIOR	#4
EXTERIOR	BF/NOTE #13

SPECIFICATIONS

VESSEL

CODE: NONE

RADIOGRAPHY

Top Head	Top Head To Shell	Shell	Bottom Head	Bottom Head To Shell
NONE	NONE	NONE	NONE	NONE

HEAT TRANSFER

CODE: NONE

RADIOGRAPHY

Top Head	Top Head To Shell	Shell	Bottom Head	Bottom Head To Shell
NONE	NONE	NONE	NONE	NONE

SIZE (GALLONS) – MODEL		SERIAL NUMBER	
16,600 GALLON "F"		164563-1-16	
VESSEL INFORMATION			
DESIGN PRESSURE	15 PSI	DESIGN TEMP.	100 °F
HYDRO TEST PRESSURE	0 PSI	DESIGN VACUUM	4"Water IN HG.
HEAT TRANSFER INFORMATION			
DESIGN PRESSURE	100 PSI	DESIGN TEMP.	100 °F
TEST PRESSURE	150 PSI	VOLUME	1.55 CU. FT.
HEATING / COOLING			
MEDIUM	NONE / GLYCOL		

EST. EMPTY WEIGHT = 13,200 LBS

SCALE 1/32"=1" (DO NOT SCALE THIS DRAWING)

DRAWN BY	Rush JOHNSON	DATE	6-16-95
REVIEWED BY	ED DAVIS	DATE	8-1-95
REVIEWED BY		DATE	
APPROVED BY		DATE	

SOLD TO: REDHOOK ALE BREWERY

ADDRESS: PORTSMOUTH, NH

CUSTOMER ORDER NO.: AL TRIPLETT

TITLE: 16,600 GAL MODEL "F" SPECIAL CONE BOTTOM

629.63HC 525.18 opening 1870 Hinge 3/4

QUANTITY: SIXTEEN

This drawing and any print thereof is the property of the PAUL MUELLER CO., Springfield, Mo., and is subject to return on request of this company. The information shown is confidential and the recipient by accepting this drawing agrees not to use any information contained thereon in any manner which will be detrimental to the PAUL MUELLER CO.

100 dollar 4 BREW

PAUL MUELLER COMPANY
P. O. BOX 828 / SPRINGFIELD, MISSOURI 65801-0828, U.S.A.

REVISION: E

SALES ORDER & SERIAL NO.: 164563 1-16

DRAWING NO.: FP08633 D

FROM DWG. NO. FP08633