K:_PROJECTS\20000-20049\20023-REG-SAINT_ROSE_LA_MEC_DWGs\MEC455-0-403849 T-240.dwg, T-240, 3/19/2007 2:56:37 PM

NOZZLE	SIZE	TYPE	FLANGE RATING	FLANGE MATERIAL	PIPE RATING	PIPE AND STUB-END MATERIAL	SERVICE
E	4"	LAP JOINT W/ STUB-END	150#	C.S.	SCH 10S	304 S.S.	EFFLUENT
F	3"	R.F. SLIP-ON	150#	304 S.S.	SCH 10S	304 S.S.	FEED
LS	1"	FULL COUPLING THRD	3000#	304 S.S.	–	–	LEVEL SWITCH
LT	1 1/2"	FULL COUPLING THRD	3000#	304 S.S.			LEVEL TRANSMITTER
MW	20"	–	–	–	–	–	MANWAY
S	4"	LAP JOINT W/ STUB-END	150#	C.S.	SCH 10S	304 S.S.	SPARE
V	3"	R.F. SLIP-ON	150#	304 S.S.	SCH 10S	304 S.S.	VENT
CIW	LARGE	–	–	–	–	–	NAMEPLATE

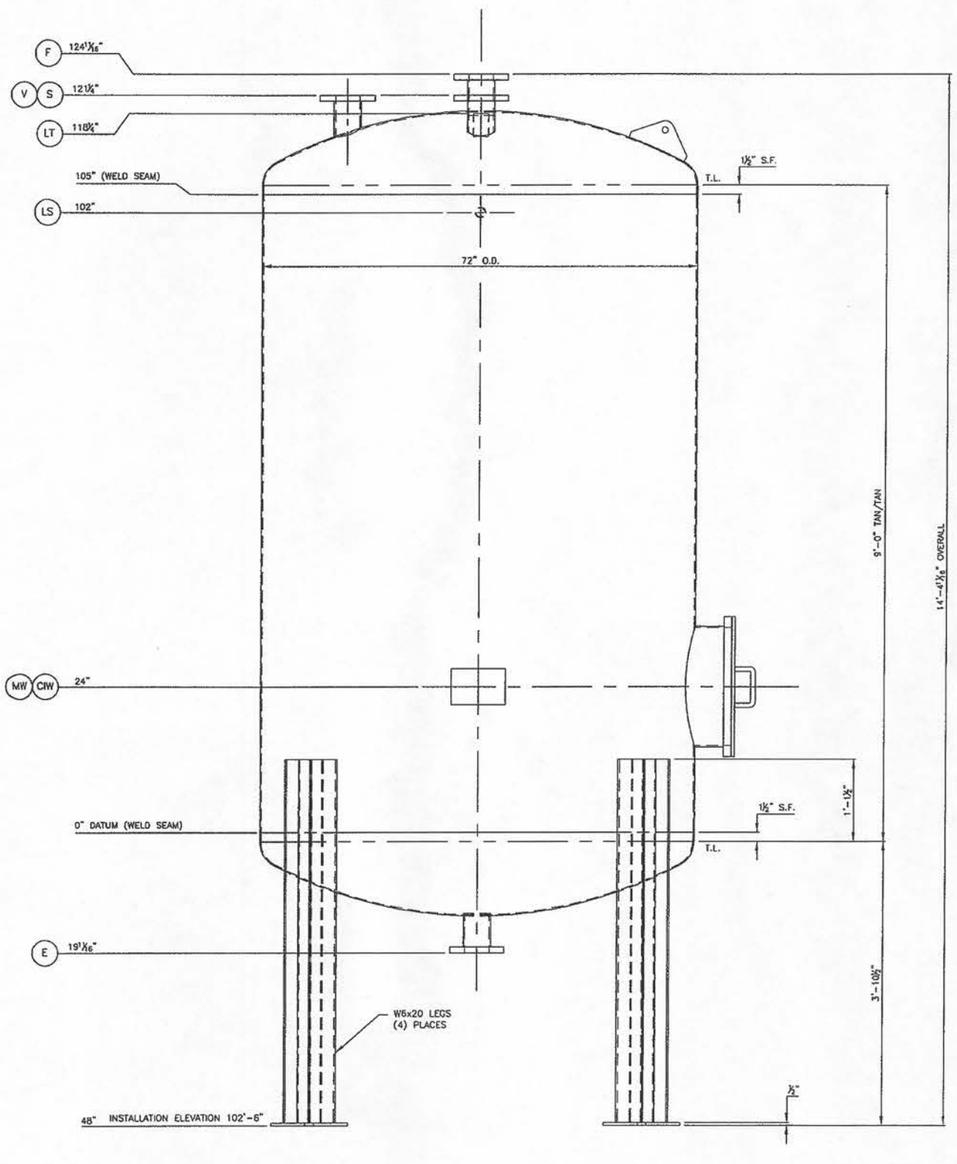

ELEVATION VIEW

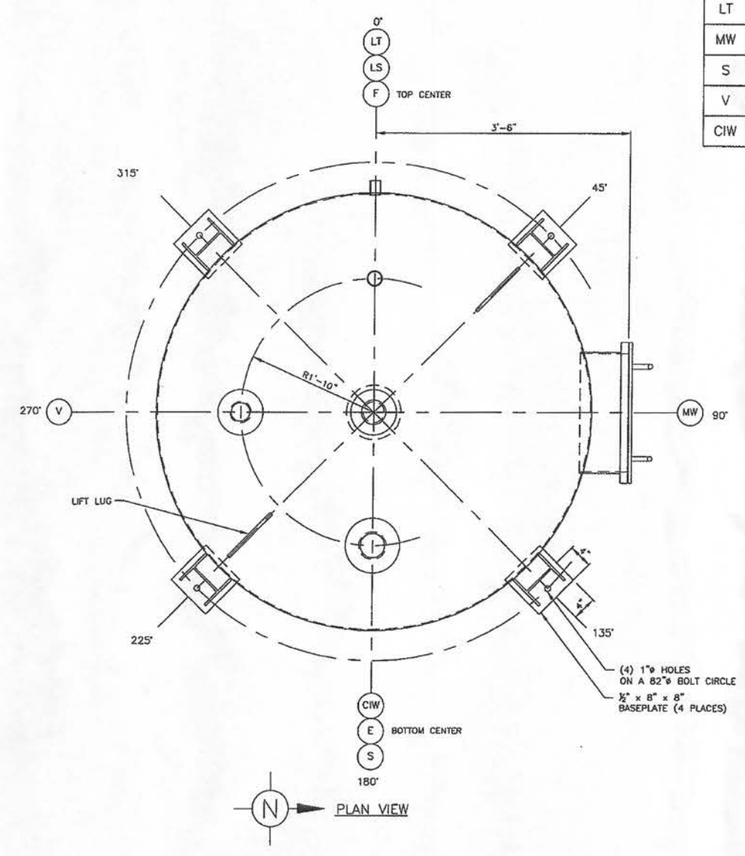

PROPRIETARY AND CONFIDENTIAL
DO NOT REPRODUCE, TRANSMIT OR DISCLOSE THIS INFORMATION WITHOUT WRITTEN CONSENT OF
CROWN IRON WORKS COMPANY

DESIGN INFORMATION

DESIGN CODE:			
DESIGN PRESSURE:	ATMOSPHERIC		
DESIGN TEMPERATURE:	300°F	MATERIALS	
WEIGHT EMPTY:	2,700 lb	VESSEL SHELL AND INTERNALS	SA240 304 S.S.
WEIGHT FULL OF WATER:	21,000 lb	SUPPORTS AND LIFT LUGS	A36 C.S.
WEIGHT, OPERATING		GASKETS: TEADIT TEALONI 1570 (OR EQUAL)	
INTERIOR VOLUME:	290 cu ft	HYDRO TEST PRESSURE:	
FINISHES			
INTERIOR: NA		CALC. #	
EXTERIOR: SHOP PRIME ALL C.S. SURFACES		JOINT EFF.	0.70

No.	Revisions	Date	By
0	ORIGINAL ISSUE	3-9-07	CIW

Designed By: CIW
Drawn By: MTC
Checked By:
Date Printed:
Date Drawn: 3-6-07
Scale: 1"=1'-0"

CROWN IRON WORKS CO.
MINNEAPOLIS, MINNESOTA 55440

NOTICE: © 2001 CROWN IRON WORKS COMPANY
THIS DRAWING AND INFORMATION ARE THE PROPERTY OF CROWN IRON WORKS COMPANY AND ARE NOT TO BE COPIED OR MISUSED. NOT RESPONSIBLE BEYOND OUR OWN WORK.

S.O. NUMBER 11475 | CIW FILE No. 403849

TODD & SARGENT
620 Arrasmith Trail – Ames, Iowa 50010
(515) 232-0442 – Fax: (515) 232-0682

REG

BIODIESEL FACILITY
-FOR-
RENEWABLE ENERGY GROUP INC.
ST. ROSE, LA.

INSTALLATION DRAWING
T-240

Job Number	Drawing No.	Rev. No.
20023	MEC455	0