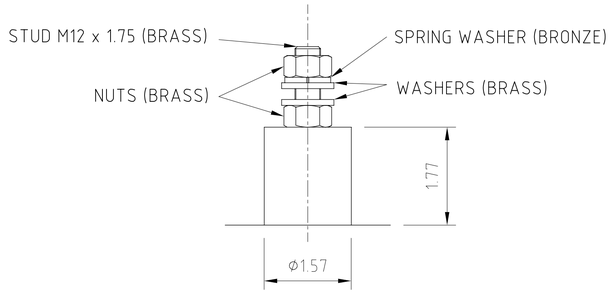

EARTHING BOSS DETAIL
SCALE 1:2

REFERENCE DRAWINGS:
Equipment Data Sheet with Predicted Performance Curve – EN207125-SNDYN-9V3-00002
Cross Sectional Drawing & Parts List – EN207125-SNDYN-9V3-00008
Coupling Assembly Drawing & Parts List – EN207125-SNDYN-9V3-00000
Motor GAD – EN207125-SNDYN-9V3-00003
Motor Data Sheet – EN207125-SNDYN-9V3-00000

ELECTRICAL HEAT TRACING/INSULATION:
Pump Casing and Coupling Housing should be trace heated.
Adequate insulation should be applied afterwards to maximize the heating effect.
Do not trace heat or insulate the oil filled bearing assembly or the electric motor.

Size 80 Mesh recommended for suction strainer

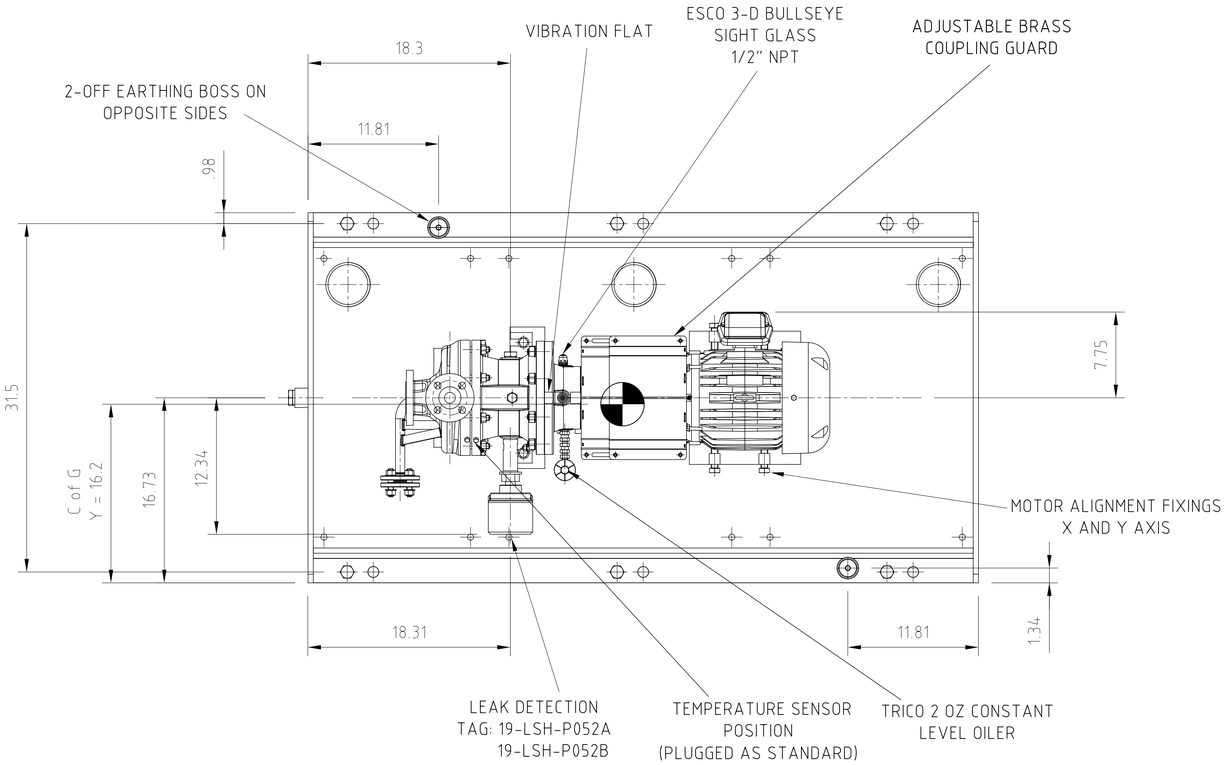

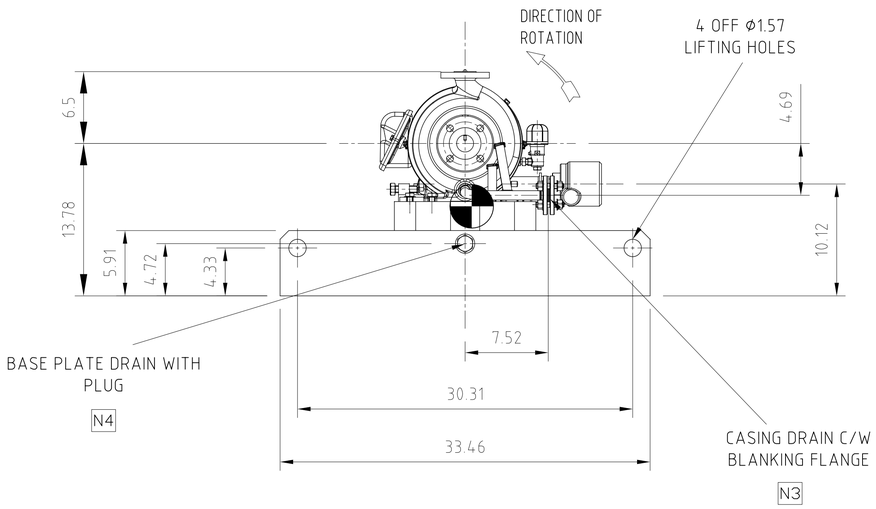

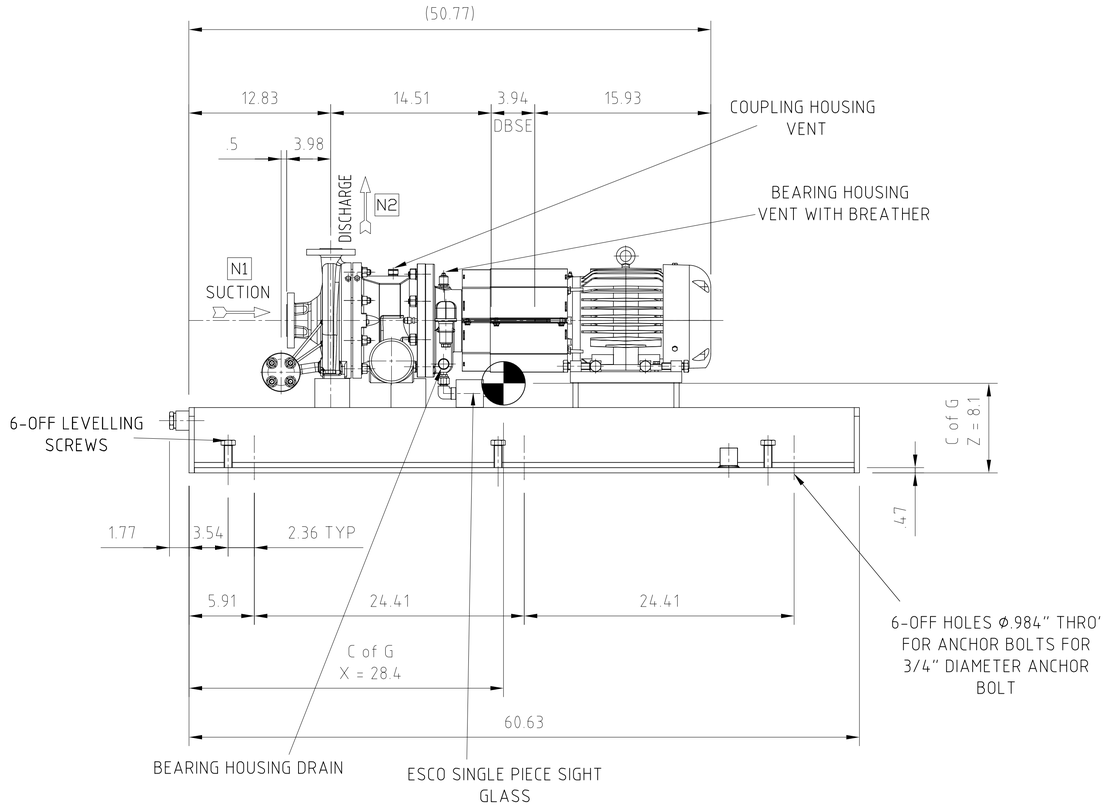

ALL DIMENSIONS IN INCHES U.O.S

Sundyne
HMD Kontro
HMD Sealless Pumps
Hampden Park Industrial Estate,
Eastbourne,
East Sussex,
BN22 9AN, England.
UK Tel: +44(0) 1323 452000
UK Fax: +44(0) 1323 503369
USA (Toll free) 888 504 8304

HYDRAULIC	CONNECTIONS			
	ITEM	SIZE	DESCRIPTION	SERVICE
1.5 X 1 X 8	N1	1.5"	ASME B16.5 150lb RF	SUCTION
	N2	1"	ASME B16.5 150lb RF	DISCHARGE
	N3	1/2"	ASME B16.5 150lb RF	CASING DRAIN
	N4	1"	NPT FEMALE	BASEPLATE DRAIN

	ALLOWABLE PIPING LOADS APPLIED TO NOZZLES		
		1"	1.5"
	FORCES (lbf)		
SUCTION	FX		1050
	FY		1210
	FZ		1210
DISCHARGE	FX	800	
	FY	1350	
	FZ	3000	
	MOMENTS (ft.lbf)		
BOTH	MX	360	720
	MY	360	190
	MZ	360	190

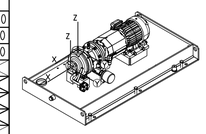

NOTE:
PUMP PRESSURE CASINGS ARE DESIGNED FOR THE VALUES STATED IN TABLE

ELECTRIC MOTOR DETAILS	
MANUFACTURER	BALDOR
RATING/FRAME	5 HP / 184T
ENCLOSURE	Cl.1 Div.2 Gr.A,B,C,D T3C
SUPPLY/SPEED	460 V / 3~ / 60 Hz / 1750
MTT (IF APPLICABLE)	N/A
MTL (IF APPLICABLE)	7.75
MTR (IF APPLICABLE)	M/A
MOTOR LENGTH (ML)	15.93

FLEXIBLE COUPLING DETAILS	
MANUFACTURER	METASTREAM
SIZE TYPE	TSKS 13 - 100mm

WEIGHTS	(lbs)
PUMP	176
MOTOR	132
BASEPLATE	474
ANCILLARIES	29
TOTAL	811

PROJECTION

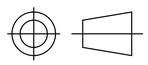

NOTES:

PROJECT NAME: WORLD ENERGY RENEWABLES PROJECT
UNIT: PWTU
PROJECT LOCATION: WORLD ENERGY, PARAMOUNT, CA, USA
ENG. & PM.: FLUOR
CLIENT: WORLD ENERGY PARAMOUNT
SERVICE: DECANTING TANK OIL PUMPS
WBS NO.: 1902

CLIENT	AIR PRODUCTS MANUFACTURING LLC
ORDER NUMBER	4505726924
ITEM NUMBER	19-P-052 A/B
HMD PUMP NUMBER	840113

ISS	DATE	CHANGE	AUTH
2	21/10/2022	ISSUE FOR REVIEW	AFS
1	31/08/2022	ISSUE FOR REVIEW	AFS
0	04/07/2022	ISSUE FOR REVIEW	AN

CONTRACTS ISSUE NUMBER

INTERNAL USE ONLY

ISS	DATE	CHANGE NUMBER	DRN	CHK
03	17/10/22	CN2022-235	JS	X
02	24/08/22	CN2022-201	JS	KCM
01	23/06/22	INITIAL ISSUE	JS	KCM

ENGINEERING ISSUE NUMBER

GENERAL ARRANGEMENT DRAWING

TITLE: GSA 1.5X1X8-L1
SUBTITLE: TYPE 5 BASEPLATE, SECONDARY CONTROL

DRAWING NUMBER X13795

ISSUE: 03 | REVISION: | SHEET No. 1 OF 1 | SCALE 1:10 | A2

©2022 HMD Sealless Pumps Ltd. This document contains proprietary information of HMD Sealless Pumps Ltd. Neither receipt nor possession thereof confers any rights to reproduce, or use, or disclose, in whole or in part, any such information without written permission from HMD Sealless Pumps Ltd.