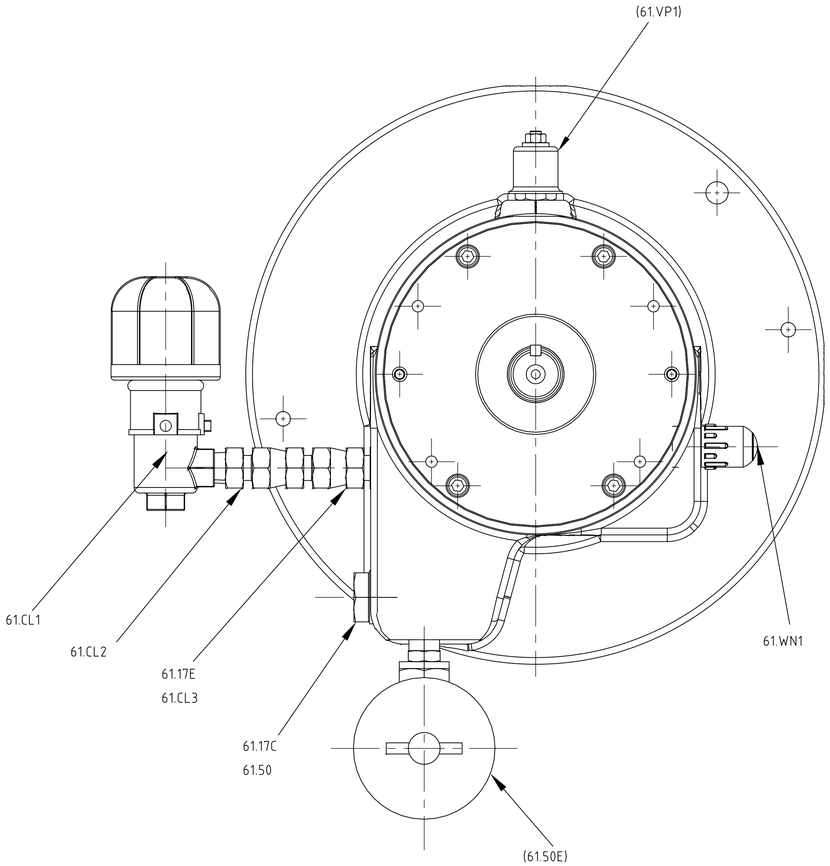

CONSTANT OIL LUBE DETAILS
REFER TO GENERAL ARRANGEMENT DRG
FOR POSITION

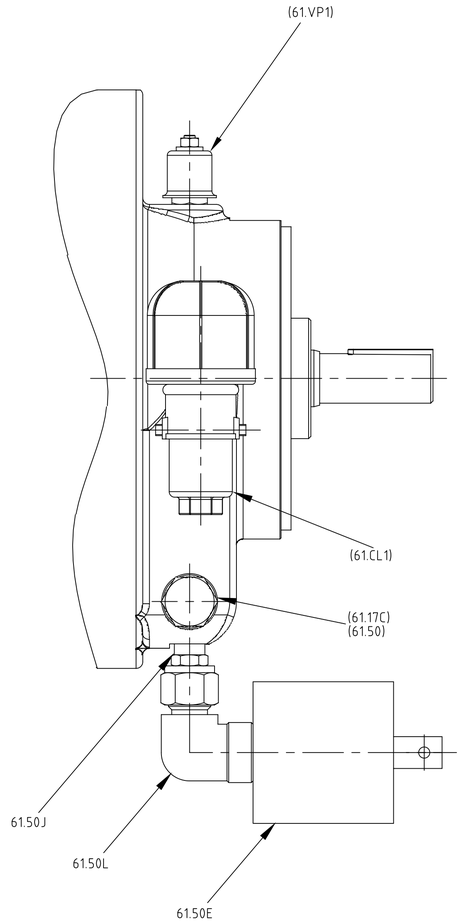

SINGLE PIECE SIGHT GLASS DETAILS
REFER TO GENERAL ARRANGEMENT DRG
FOR POSITION

Sundyne
HMD Kontro
HMD Sealless Pumps
Hampden Park Industrial Estate,
Eastbourne,
East Sussex,
BN22 9AN, England.
UK Tel: +44(0) 1323 452000
UK Fax: +44(0) 1323 503369
USA (Toll free) 888 504 8304

NOTES:

CLIENT	AIR PRODUCTS MANUFACTURING LLC
ORDER NUMBER	4505726924
ITEM NUMBER	19-P-052 A/B
HMD PUMP NUMBER	840113 A/B

REV	DATE	CHANGE	AUTH
2	21/10/2022	REVISED ISSUE	AFS
1	31/08/2022	REVISED ISSUE	AFS
0	12/07/2022	INITIAL ISSUE	AN

CONTRACTS ISSUE NUMBER

INTERNAL USE ONLY

ISS	DATE	CHANGE NUMBER	DRN	CHK
01	23/03/22	INITIAL ISSUE	KCM	ARM

ENGINEERING ISSUE NUMBER

CROSS SECTIONAL DRAWING

TITLE: GSA1 PUMP RANGE

SUBTITLE: SEPERATE MOUNTED, SECONDARY CONTROL

DRAWING NUMBER X13710

ISSUE: 01 | REVISION: 01 | SHEET No. 2 OF 2

SCALE NTS

©2022 HMD Sealless Pumps Ltd. This document contains proprietary information of HMD Sealless Pumps Ltd. Neither receipt nor possession thereof confers any rights to reproduce, or use, or disclose, in whole or in part, any such information without written permission from HMD Sealless Pumps Ltd.