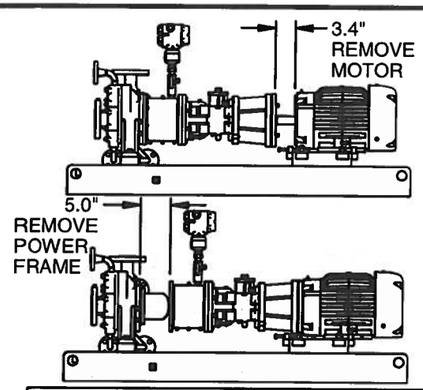

PUMP WEIGHT = 269 LB., 281 LB. OPERATING
MOTOR WEIGHT = 225 LB.
BASE WEIGHT = 314 LB.
TOTAL WEIGHT = 808 LB., 820 LB. OPERATING

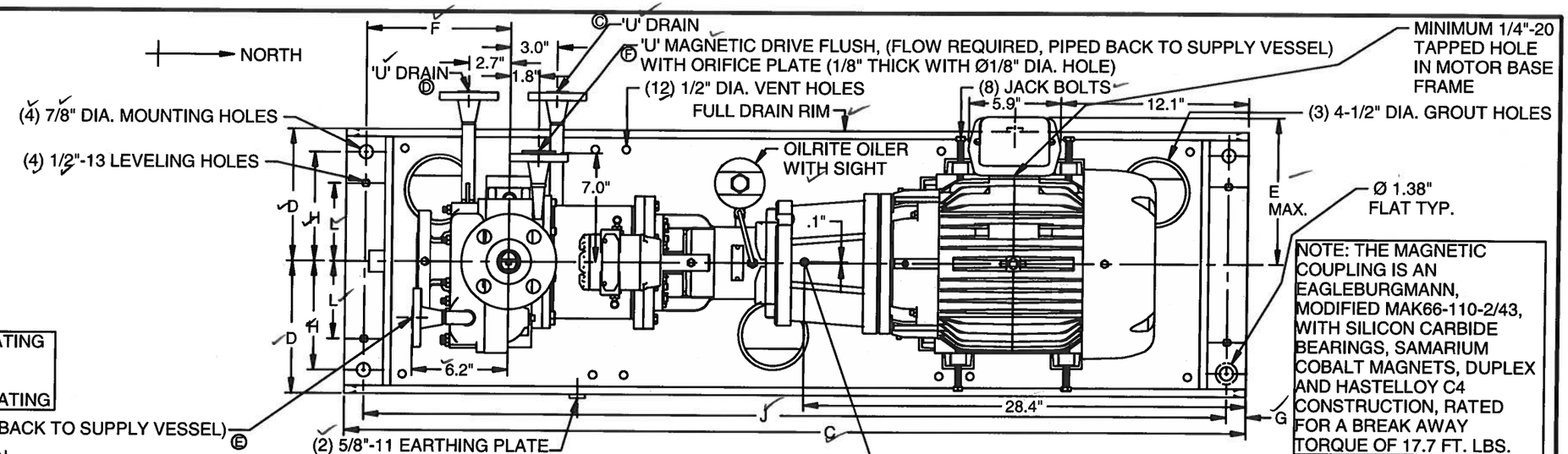

NOTE: THE MAGNETIC COUPLING IS AN EAGLEBURGMANN, MODIFIED MAK66-110-2/43, WITH SILICON CARBIDE BEARINGS, SAMARIUM COBALT MAGNETS, DUPLEX AND HASTELLOY C4 CONSTRUCTION, RATED FOR A BREAK AWAY TORQUE OF 17.7 FT. LBS.

ROTATION

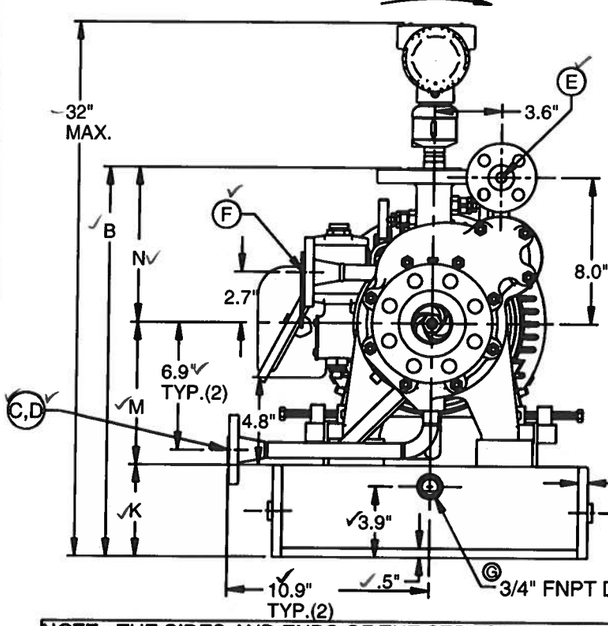

OVERALL & LOCATION DIMENSIONS

1. Dimensions marked approximate(app) ±1"
2. No decimal place ±1/2"
3. One decimal place ±1/4"
4. Two decimal places ±1/8"
5. Three decimal places ±1/32"

Pierced or drilled holes ±1/64"

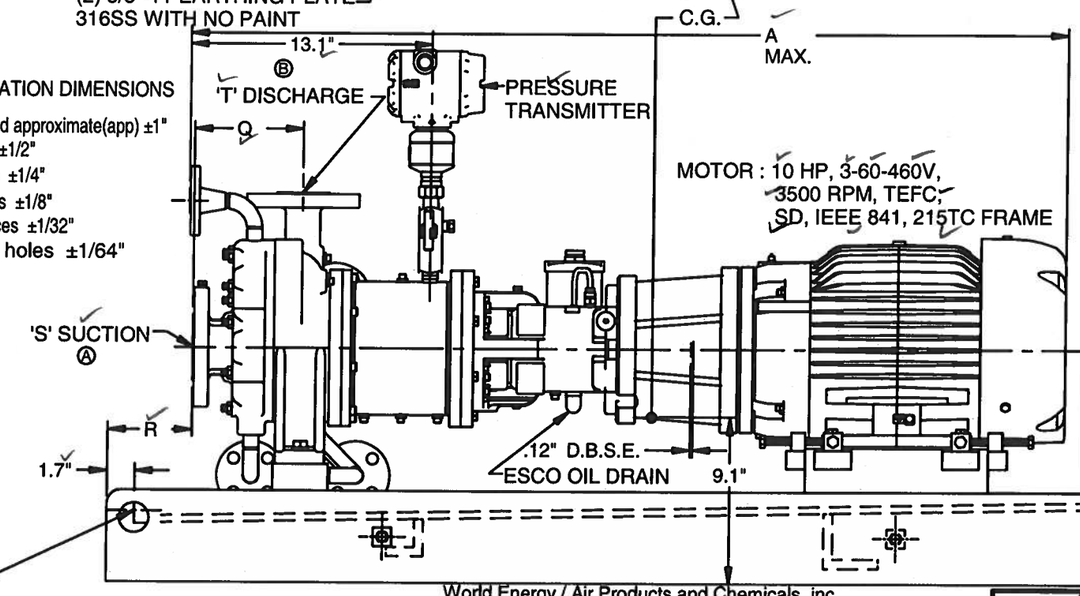

MOTOR : 10 HP, 3-60-460V, 3500 RPM, TEFC, SD, IEEE 841, 215TC FRAME

LIQUID : AQUEOUS AMINES/ HYDROCARBONS
TEMPERATURE : 108°F-118°F
SPECIFIC GRAVITY : 1.055/ 0.584
VISCOSITY : 4.66 CP/ 0.35 CP
RATED FLOW : 15.0 GPM
TDH : 241 FT/ 402.6 FT
ABSORBED POWER : 3.7 BHP/ 3.8 BHP

NOZZLE	NAME	SIZE	TYPE	RATING
Ⓐ	SUCTION	2"	RF FLG SCH. 160	300#
Ⓑ	DISCHARGE	1-1/2"	RF FLG SCH. 160	300#
Ⓒ	CASE DRAIN	1/2"	RF FLG SCH. 80	300#
Ⓓ	BOOSTER CASE DRAIN	1/2"	RF FLG SCH. 80	300#
Ⓔ	BOOSTER CASE VENT	1/2"	RF FLG SCH. 80	300#
Ⓕ	MAGNETIC DRIVE FLUSH	1/2"	RF FLG SCH. 80	300#
Ⓖ	BASE DRAIN	3/4"	FNPT	150#

NOTE : THE SHAFT COUPLING IS A TB WOODS, TYPE 6J, WITH CAST IRON HUBS AND A NEOPRENE SLEEVE AND A SERVICE FACTOR OF 2.0.

NOTE : THE SIDES AND ENDS OF THE STRUCTURAL STEEL BASE ARE 5" X 3" X 1/2" ANGLE, THE TOP IS 3/8" PLATE WITH A 3" X 3" X 1/2" AND A 2" X 2" X 3/8" ANGLE UNDER IT.

MOTOR FRAME	A	B	C	D	E	F	G	H	J	K
215TC	50"	21.2"	58.0"	8.5"	12"	9.3"	1.25"	7.0"	55.5"	5.0"
HP	L	M	N		Q	R	S	T	U	
10	5.0"	7.8"	8.4"		5.9"	4.6"	2" 300# RF FLG SCH. 160	1-1/2" 300# RF FLG SCH. 160	1/2" 300# RF FLG SCH. 80	

World Energy / Air Products and Chemicals, inc
TAG : P.O. NO. : 4505675605
ITEM NO. : 18-P-382 A/B
COMPRESSOR KO DRUM PUMP
TRACKING NO. : C249900100
SHIP WITH 64229

CKD	DATE	LET.	REVISIONS	BY
TM	11-9-22	C	ADDED Ø 1.38" FLAT TYP., FNPT WAS NPT	TM
TM	9-7-22	B	ADDED DIMENSIONS AND BASE FRAME DETAILS, REMOVED APPROXIMATE FROM WEIGHTS, LABELED C,D,E, AND F IN LEFT VIEW, LOCATED BASE DRAIN.	TM
TM	6-23-22	A	ADDED NORTH, Ø1 5/8 TYP. AND 1/2 TYP. DIMENSIONS TO LIFTING LUGS, 4.8" DIM., ORIFICE DETAILS. PIPE SCHEDULE. DETAILS OF PUMP TABLE, CONNECTIONS TABLE. COUPLING DATA, MAINTENANCE DIMS., 7/8 WAS 5/8. CUSTOMER DATA, OILER, TRANSMITTER, EARTHING PLATE, WEIGHTS, C.G., CALLED OUT MOTOR BASE FRAME HOLE	TM

ROTH® TURBINE PUMPS
ROTH PUMP CO.
Subsidiary of Roy E. Roth Company
ROCK ISLAND, ILLINOIS 61204

MDW5141SA PUMPSET

DATE 5-5-22
SCALE ~
DRAWN TM
CHECKED TM

DRG. NO. B-64228AB