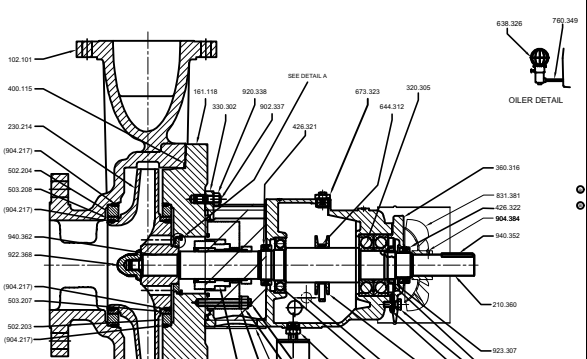

COPYRIGHT © (2022) SULZER PUMPS (US) INC. ALL RIGHTS RESERVED. NO PART OF THIS DRAWING MAY BE REPRODUCED, DISTRIBUTED, OR TRANSMITTED IN ANY FORM OR BY ANY MEANS, ELECTRONIC OR MECHANICAL, INCLUDING PHOTOCOPYING AND RECORDING, WITHOUT THE EXPRESS **PRIOR** WRITTEN CONSENT OF SULZER PUMPS (US) INC.

SIMILAR DWG. -

MACHINING REGULATIONS SEE DRAWING STANDARDS.

MATERIAL CLASS: "S-8-NACE"

PARTS LIST			
PART NO	DESCRIPTION	QT	MATERIAL
163.161	VOLUTE CASE	1	A216 GR. WCB NACE
161.118	CASE COVER	1	A216 GR. WCB NACE
210.360	SHAFT	1	AISI 17/PH 316 CONC. A
230.214	IMPELLER	1	EN304/AISI 316 CF3M/NACE
320.304	DISTRIBUTION BEARING (INNER)	1	A276/AISI 316
320.305	DISTRIBUTION BEARING (THRUST)	2	17/1 SM CA SI PHPS
330.302	BEARING HOUSING	1	A216 GR. WCB
380.316	BEARING COVER	1	A216 GR. WCB
426.321	GASKET	1	316 FLEXICRAPHITE
426.322	BEARING ISOLATOR (NIPRO) (WCB)	1	BRONZE
426.322	BEARING ISOLATOR (NIPRO) (WCB)	1	BRONZE
433.401	MECHANICAL SEAL	1	316/6 CRA/WC
508.310	CLOSE CLEARANCE THROAT BUSHING	1	DRUM METAL 6/316
502.203	STATIONARY RING COVER	1	AISI 316 NACE
502.204	STATIONARY RING CASE	1	AISI 316 NACE
503.208	IMPELLER RING HUB	1	DISL / CRP
503.209	IMPELLER RING STE	1	DISL / CRP

PARTS LIST			
PART NO	DESCRIPTION	QT	MATERIAL
508.310	OIL THROWER	1	A276/AISI
554.418	WASHER	1	AISI 316
591.320	PIN	1	AISI 316
592.329	PIN	1	AISI 316
687.376	COLLECTION BOTTLE 6 OZ/O	1	
673.323	PIN	1	316/NACE
730.317	CONSTANT LEVEL OILER	1	
831.381	O-RING	1	
902.105	SNAP RLCKR OIL RETE (NOT SHOWN)	1	
902.108	OIL RELIEVER FILTER	1	
902.337	OIL GUARD (1 SET)	1	
902.416	REDUCER BUSHING	1	CARBON STEEL
902.901	STPLS	1	A216 GR.B
901.381	PIN	1	316
940.352	SUPPORTER WEB HEAD	1	A276/AISI
902.103	STUD (CASE TO COVER)	8	A193 GR. B7
902.207	STUD (BEARING BRACKET TO COVER)	8	A193 GR. B7
902.416	STUD (SEAL TO COVER)	8	A193 GR. B7
-	-	-	-

PARTS LIST			
PART NO	DESCRIPTION	QT	MATERIAL
903.217	KEY SCREW (PINION)	12	18/304/A1 A2 PC (316/316L)
-	-	-	-
-	-	-	-
903.384	KEY SCREW (FAN)	1	18/304/A1 A2 PC (316/316L)
904.384	SPACER	1	316
905.105	KEY (CASE TO COVER)	4	A276 GR. 304
905.208	KEY (BEARING BRACKET TO COVER)	4	A276 GR. 304
905.217	KEY (SEAL TO COVER)	4	A276 GR. 304
905.308	IMPELLER NUT	1	AISI 316
923.307	BEARING NUT	1	CARBON STEEL
931.306	SEAL	1	316
931.309	SCREWDRIVER	1	CARBON STEEL
932.216	BEARING NUT	1	PH 15/7 MO
950.215	COUPLING	1	AISI 316
950.216	KEYS (SPIDER)	1	17-7 PH (316/NACE)

REV	MODIFICATION	MODIFIED	CHECKED	APPROVED
		-	-	-
		-	-	-

SEP. PARTS LIST	-	DESIGN GROUP	SULZER PUMPS	3RD ANGLE PROJECTION
REPLACED BY	-	SUBSTITUTE FOR		ORIGINAL SCALE M1:1

OHH

2 X 3 X 7.5A

SPMX

100456527-0010

CROSS SECTION
BALL-BALL BEARING
OIL RING LUB. WITH FAN
CROSS SECTION DRAWING

DRAWN: 20-JAN-2022 A.GUTIERREZ
CHECKED: 20-JAN-2022 H.HERNANDEZ
APPROVED: 20-JAN-2022 C.GONZALEZ

SULZER

PART NO. EN PCS100456527001 0-01 1 / 1

PCS100456527001 0-01_Z21_000_0301ub7 di-gep-3 CONTKAR 2022-04-26T18:17:02/2012

ACAD / ANSI - SIZE / 24 X 17