Customer: World Energy Paramount
Equipment Owner: Air Products Manufacturing LLC
APCI No: EN207123-TEI-9V3-00023
Order No: 4505499562
Job No: A8KM
Project Name: World Energy Renewables Project
Item No: 18-P-1857 A/B
Item Name: Aqueous Ammonia Loading Pump
Model:F41-416C4XM-0508TG1-AV

AS-BUILT

TEIKOKU CANNED MOTOR PUMP DATA SHEET

No. QFP-1520A

10/25/2021

B Customer : World Energy Paramount

B Equipment Owner : Air Products Manufacturing LLC
B APCI No. : EN207123-TEI-9V3-00023
Order No. : 4505499562
Job No. : A8KM B
Project Name : World Energy Renewables Project B
Item No. : 18-P-1857 A/B
Item Name : Aqueous Ammonia Loading Pump
Model : F41-416C4XM-0508TG1-AV Qty : 2

Sign For Receipt (For customer)

TEIKOKU ELECTRIC MFG. CO., LTD.

Approved by	Checked by	Designed by
K. Akashi	M. Morii	E. Fujimura

Operating Conditions

Total Head (ft) : 80.7 C Capacity (GPM) : 150
(m3/h) : 34.07
Suction Press. (psiG) : 0.1 B Discharge Press. (psiG) : 32.59 B C
NPSHava. (ft) : 10.6 NPSHreq. (ft) : 7.6 B
Liquid B : 19% Aqueous Ammonia
Temperature (Rated/Range) (°F) : 70 / 70-105
Specific Gravity (Des./Range) : 0.93 / ---
Viscosity (Des./Range) (cP) : 1.1 / ---

Specific Heat (BTU/lbmR) : 1.0 Melting Temp. (°F) : ---
Vapor Press. (psiA) : 4.56 B
Solids Name : ---
Concentration (wt%) : --- Particle Size (μin.) : --- S.Gr. : ---
Flushing or Barrier Fluid : ---
at Sp. Gr./Vis.(cP) : --- /
Press. (psiG) : S.P.+ --- ±--- Flow (GPM) : ---

Materials

Casing : SCS13(CF-8 304 SS)
Impeller : SCS13(CF-8 304 SS)
FBH : SUS304(304 SS)
RBH : SCS13(CF-8 304 SS)
Motor Flange : SUS304L(304L SS)
Stator Can : SUS304L(304L SS)
Shaft : SUS304(304 SS)
Rotor Can : SUS304L(304L SS)
Bearing : Carbon Graphite
Shaft Sleeve
+ Thrust Collar : SUS316(316 SS)+Stellite
Pump Gasket : PTFE
Motor Gasket : PTFE
Other Gasket : ---
Mechanical Seal : ---

Pump Design & Construction

Design Press. (psi) : 145 Des. Temp. (°F) : 155 B
Code Applied : API685 B Nameplate : English

Nozzle Connection : ASME Finish : SERRATED Ra 3.2-6.3μm

	Nozzle	Rating	Size	Facing	Position
	Suction	150LB	3"	RF	END
	Discharge	150LB	2"	RF	TOP
B	Drain(Casing)	150LB	3/4"	RF	SIDE
B	Drain(RBH)	150LB	3/4"	RF	SIDE
B	Pressure Transmitter	---	NPT1/2"	---	---

Jacket Design Press. (psi) : ---

Utilities Required		Media	Condition(Max)	Flow(Min.)	Connection
Casing	NONE	---	---	---	---
Motor	NONE	---	---	---	---
Cooler/Ext. Tube	NONE	---	---	---	---
Motor(Stop)	---	---	---	---	---

Performance

Imp. Dia(Rated) : 5.12 F (in.)
Imp. Dia(Max.) : 6.53 (in.)
Imp. Dia(Min.) : 5.12 (in.)
Min. Flow (GPM) : 44.91 Impeller Type : CLOSE
Min. Flow (m3/h) : 10.2 No. of Stage : 1

Spare Parts

Front Bearing	4	PCS	Pump Gasket	4	PCS
Rear Bearing	4	PCS	Motor Gasket	4	PCS
Shaft Sleeve	4	PCS	Lockwasher	2	Sets
Thrust Collar	4	PCS			

Accessories

Drawings and Documents

Dimensional Dwg. : 6L-6144 Thermowell : 4N-7613
Terminal Box : 6M-0946 D B Name Plate : 3M-9975
Sectional View Dwg. : 6L-6156 Instruction Manual : HE-12342
Material List : P-34513
Est. Performance Curve : SFP-1520A
Connection Diagram : 6M-0947
Spare Parts List : SP-FP1520A
Allowable Piping Forces and Moments : 4N-9587-04

Power Supply & Drive Motor

Frame No. : 416 Duty : Cont
Voltage(V) : 460 Frequency(Hz) : 60 Phase : 3 Pole : 2
Output (hp/kW) : 14.8/11 Rated Amp.(A) : 21 Start Amp.(A) : 106
Thermal Class : 220 Start Method : DIRECT
R.P.M.(rpm) : 3600 Direction : C.C.W.(Viewed from Pump Suction)
Voltage for protection(V) : --- Protection Device : Thermocouple(TYPE K)(*1) B
Dry Run Protection Relay : ---
Terminal Box : Stud/Thread/ 1
Power Cable Conduit : NPT1 Cable O.D.(Main) (in.) : ---
Instrument Cable Conduit : NPT3/4 Cable O.D.(Sub) (in.) : ---
ATEX Marking : ---

Other

Special Treatment : None
Painting Color : Light Gray
Rotating Direction
Monitoring : Yes
Bearing Wear Monitor : Radial / Local

Remarks :

- T-USA#409713
- E ·Hazardous Area Classification : Class1, Div.2, Gr.A,B,C&D NEC T4
- F
- B ·Maximum Suction Pressure: 29 psiG
- B ·With CSA safety label
- B ·(*1) Instrumentation connections
  - ·Secondary Containment Connction for PT
  - ·Stator Liner/Containment Shell RTD
  - ·Motor Winding Thermocople(Type K)

REVISIONS

F	Deleted 1 point
	Revised 1 points(Jan.31'23) K.Nagase
E	Revised 1 point(Nov.14'22) K.Nagase
D	Revised 1 point(May.24'22) K.Nagase
C	Revised 2 points(Mar.7'22) K.Nakazumi
B	Revised 20 points(Feb.2'22) K.Nakazumi

DWG. NO. : 6L-6144

Allowable Piping Forces & Moments

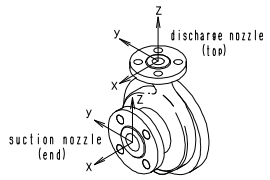

Pump Case

Fsx	Fsy	Fsz	Fdx	Fdy	Fdz
300	240	200	160	130	200
Msx	**Msy**	**Msz**	**Mdx**	**Mdy**	**Mdz**
700	350	530	340	170	260

NOTE : F = force (lb) M = moment (lb-ft)
S = suction nozzle
d = discharge nozzle

See the figure for orientation of nozzle loads (x, y, z)

The allowable force & moment is 2 times the value shown in table.

Description: Canned Motor Pump (Sealless Pump)

Customer	: World Energy Paramount
Equipment Owner	: Air Products Manufacturing LLC
APCI No.	: EN207123-TEI-9V3-00022 & EN207123-TEI-9V3-00008
Order No.	: 4505499562
Job No.	: A8KM
Project Name	: World Energy Renewable Project
Item No.	: 18-P-1857 A/B
Item Name	: Aqueous Ammonia Loading Pump
Model	: F41-416C4XM-0508TG1-AV
Total Weight(includes baseplate)	: 530Lbs (240kg)

Note
1. ⊕ :Center of gravity
2. A connection port for the pneumatic test for the secondary containment shell. After the test, this will be plugged and welded to close.
3. Anchor Bolts shall be supplied by Other

NOZZLE
a･･･Casing Drain ASME150Lb 3/4" RF
b･･･Rotor Cavity Drain ASME150Lb 3/4"RF
c･･･Terminal Box for Power NPT1
d･･･Terminal Box for Protection NPT3/4
e･･･Pressure Transmitter NPT1/2

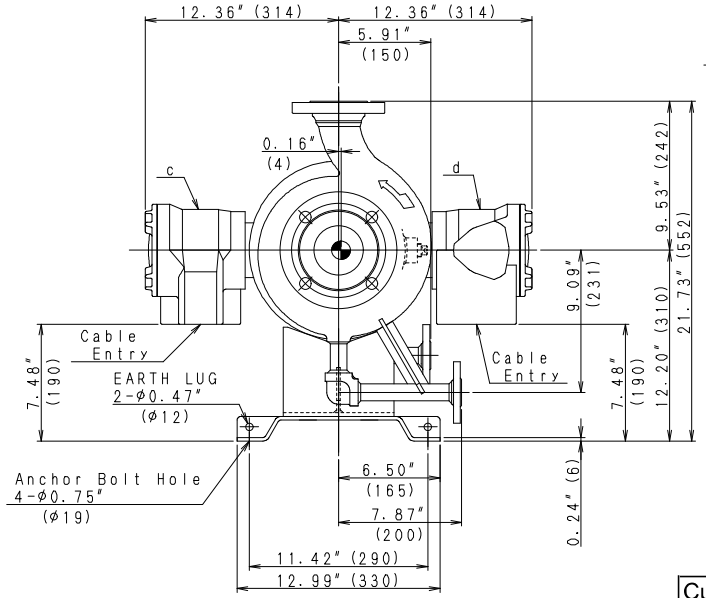

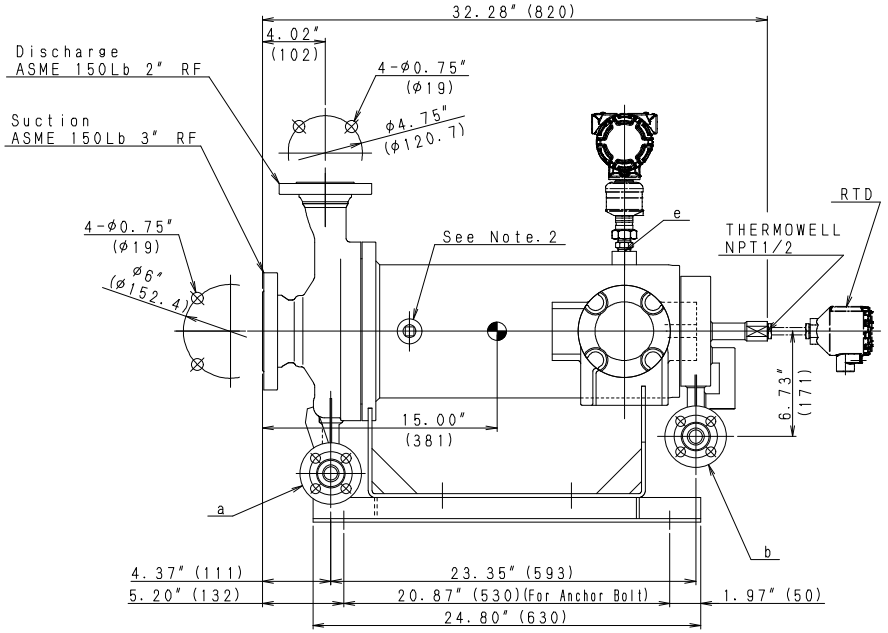

Customer: World Energy Paramount
Equipment Owner: Air Products Manufacturing LLC
APCI No: EN207123-TEI-9V3-00022 , EN207123-TEI-9V3-00008
Order No: 4505499562
Job No: A8KM
Project Name: World Energy Renewables Project
Item No: 18-P-1857 A/B
Item Name: Aqueous Ammonia Loading Pump
Model:F41-416C4XM-0508TG1-AV

AS-BUILT

REV. NO.	REVISIONS	DATE	DRN	CHKD	APPD
C	Rewritten	May-24-22	KN	MM	
B	Rewritten	Feb-2-22	KN	MM	KA

DWG. TITLE

GENERAL ARRANGEMENT DRAWING

VENDOR 株式会社帝国電機製作所 TEIKOKU ELECTRIC MFG. CO., LTD.

SCALE	SIZE	SHEET	REV.
1:6	A2	1/1	C

DWG. No. 6L-6144

Units in inches(mm)

FP1520A

6M-0946

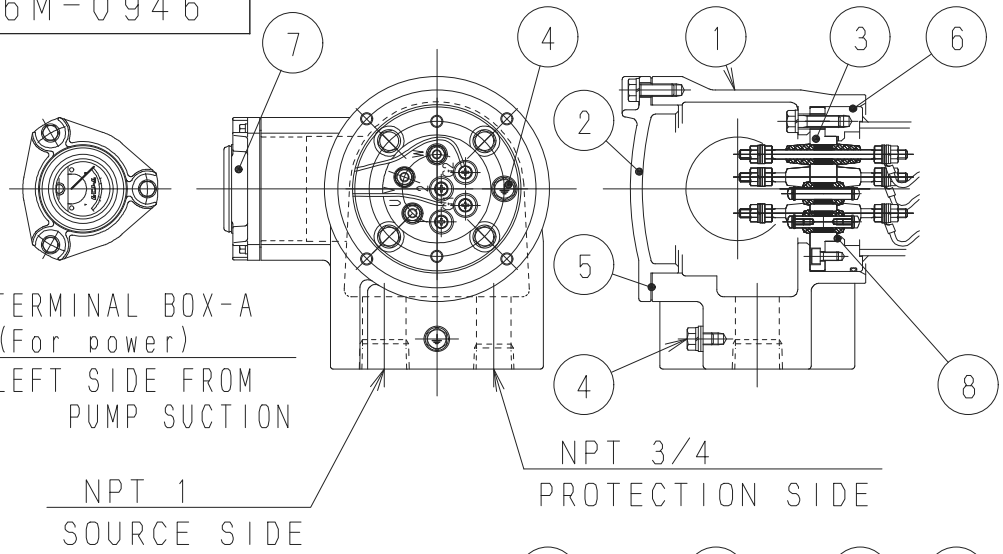

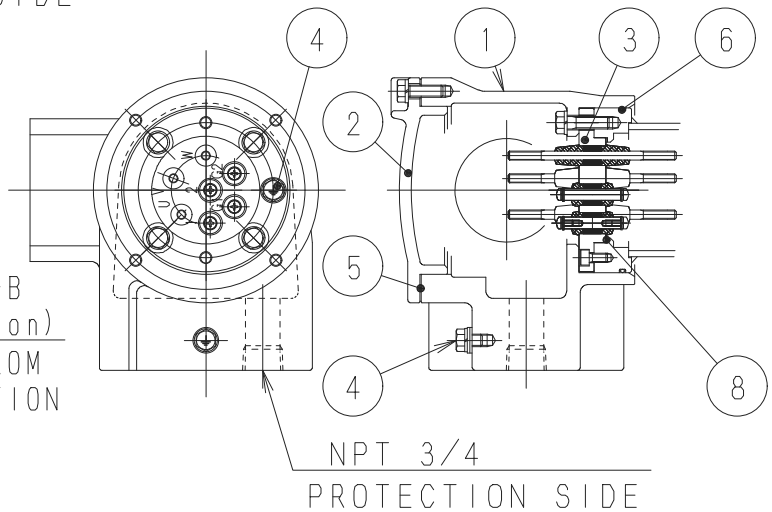

No.	NAME
1	TERMINAL BOX
2	TERMINAL COVER
3	TERMINAL PLATE
4	EARTH TERMINAL
5	GASKET
6	O-RING
7	TRG METER
8	O-RING

TERMINAL MARK

<T. BOX-A>

U·V·W·····POWER SOURCE(M6)
1·2·····THERMOCOUPLE(M4)
G1·G2·····TRG METER(M4)

TERMINAL MARK

<T. BOX-B>

U·V·W·····NOT USED
1, 2, G2····RTD(for stator liner)(M4)
G1·····NOT USED

FP1520A

REVISIONS

AS-BUILT

Customer: World Energy Paramount
Equipment Owner: Air Products Manufacturing LLC
APCI No: EN207123-TEI-9V3-00021 , EN207123-TEI-9V3-00014
Order No: 4505499562
Job No: A8KM
Project Name: World Energy Renewables Project
Item No: 18-P-1857 A/B
Item Name: Aqueous Ammonia Loading Pump
Model:F41-416C4XM-0508TG1-AV

APPROVED	CHECKED	DRAWN	SCALE
K.Akaoka	M.Morii	E.Fujimura Oct·22·'21	FREE

株式会社 帝国電機製作所
TEIKOKU ELECTRIC MFG. CO., LTD.

DWG. TITLE 端子箱
TERMINAL BOX
S HERMETIC SEALS (WITH O-RING)

DWG. NO.
6M-0946

6L-6156

NOTE

Bearing A···with spiral & straight grooves

Bearing B···with spiral grooves

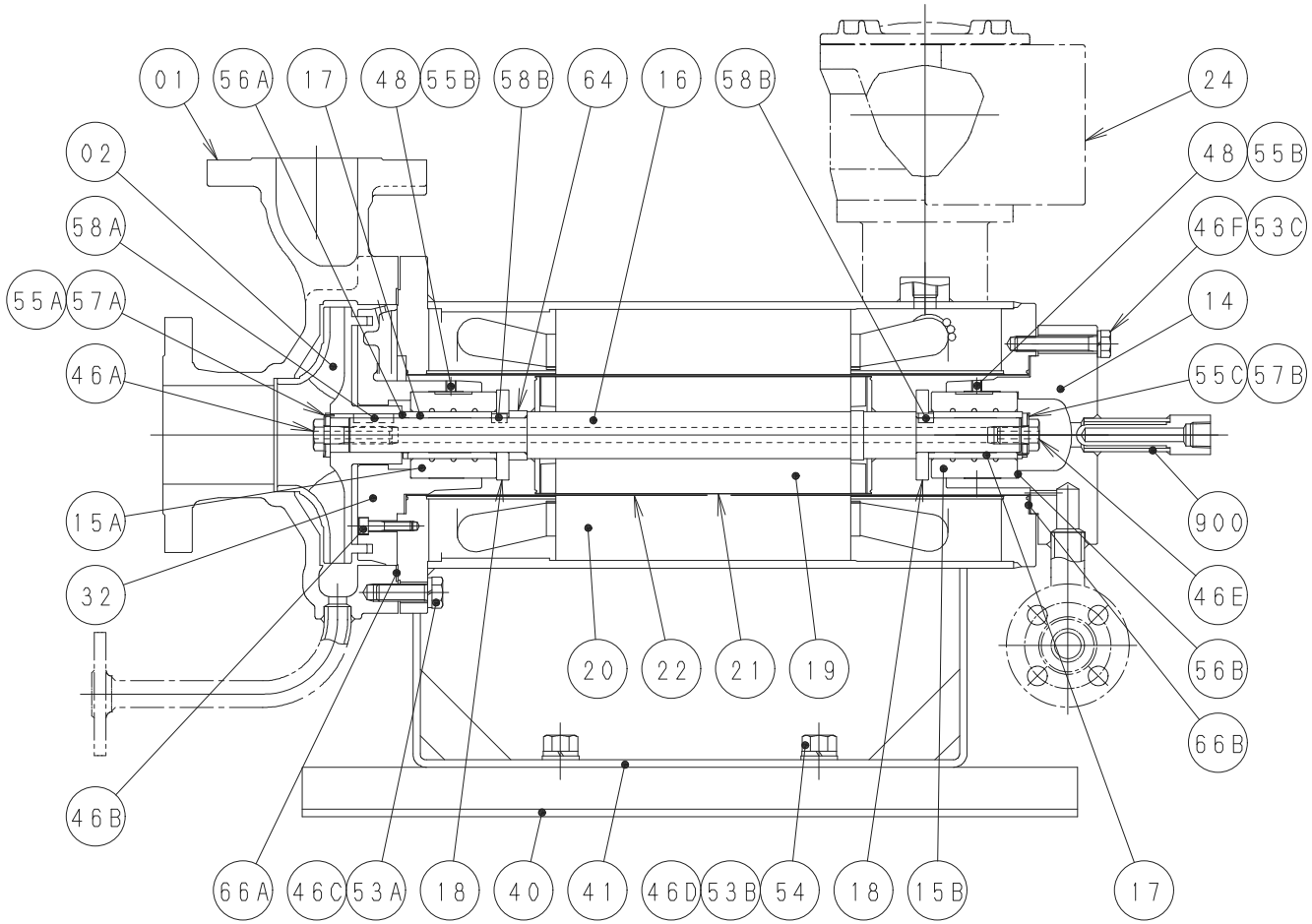

NO.	NAME OF PARTS	NO.	NAME OF PARTS
01	CASING	48	SET SCREW
02	IMPELLER		
14	R. B. HOUSING	53A	SPRING WASHER
15A	BEARING B	53B	SPRING WASHER
15B	BEARING A	53C	SPRING WASHER
16	SHAFT	54	PLAIN WASHER
17	SHAFT SLEEVE	55A	WASHER
18	THRUST COLLAR	55B	WASHER
19	ROTOR ASSY	55C	WASHER
20	STATOR ASSY	56A	ADJUSTING WASHER
21	ROTOR CAN	56B	ADJUSTING WASHER
22	STATOR CAN	57A	LOCK WASHER
24	TERMINAL BOX ASSY	57B	LOCK WASHER
		58A	KEY
32	F. B. HOUSING	58B	KEY
40	BASE		
41	HOLDER	64	SPACER
46A	BOLT	66A	GASKET
46B	BOLT	66B	GASKET
46C	BOLT		
46D	BOLT	900	THERMOWELL
46E	BOLT		
46F	BOLT		

FP1520A

REVISIONS

AS-BUILT

Customer: World Energy Paramount
Equipment Owner: Air Products Manufacturing LLC
APCI No: EN207123-TEI-9V3-00020 , EN207123-TEI-9V3-00015
EN207123-TEI-9V3-00019
Order No: 4505499562
Job No: A8KM
Project Name: World Energy Renewables Project
Item No: 18-P-1857 A/B
Item Name: Aqueous Ammonia Loading Pump
Model:F41-416C4XM-0508TG1-AV

APPROVED	CHECKED	DRAWN	SCALE
K.Akuho	M.Morii	E.Fujimura Oct·25·'21	FREE

株式会社 帝国電機製作所
TEIKOKU ELECTRIC MFG. CO., LTD.

DWG. TITLE 構造断面図
SECTIONAL VIEW DRAWING
TYPE:F-V

DWG. NO. 6L-6156

MATERIAL LIST

NO.	NAME	MATERIAL (JIS Std./Eq. ASTM,AISI Std.)	REMARKS
01	CASING	SCS13 / CF-8 304 SS	
02	IMPELLER	SCS13 / CF-8 304 SS	
14	R.B.HOUSING	SUSF304 or SCS13/F 304 SS or CF-8 304 SS	
15A	BEARING B	Carbon Graphite	
15B	BEARING A	Carbon Graphite	
16	SHAFT	SUS304 / 304 SS	
17	SHAFT SLEEVE	SUS316 / 316 SS + Stellite	
18	THRUST COLLAR	SUS316 / 316 SS + Stellite	
19	ROTOR ASS'Y	----------	
20	STATOR ASS'Y	----------	
21	ROTOR CAN	SUS304L / 304L SS	
22	STATOR CAN	SUS304L / 304L SS	
24	TERMINAL BOX ASS'Y	FC200 etc. / Cl.No.35 etc.	
32	F.B.HOUSING	SUSF304 or SCS13/F 304 SS or CF-8 304 SS	
40	BASE	SS400 / Carbon Steel	
41	HOLDER	SS400 / Carbon Steel	
46A	BOLT	SUS304 / 304 SS	
46B	BOLT	SUS304 / 304 SS	
46C	BOLT	SUS304 / 304 SS	
46D	BOLT	S20C / Carbon Steel	
46E	BOLT	SUS316 / 316 SS	
46F	BOLT	SUS304 / 304 SS	
48	SET SCREW	SUS316 / 316 SS	
53A	SPRING WASHER	SUS304 / 304 SS	
53B	SPRING WASHER	SWRH / Carbon Steel	
53C	SPRING WASHER	SUS304 / 304 SS	
54	PLAIN WASHER	SPCC / Carbon Steel	
55A	WASHER	SUS316L / 316L SS	
55B	WASHER	SUS316L / 316L SS	
55C	WASHER	SUS316L / 316L SS	
56A	ADJUSTING WASHER	SUS316L / 316L SS	
56B	ADJUSTING WASHER	SUS316L / 316L SS	
57A	LOCK WASHER	SUS316L / 316L SS	
57B	LOCK WASHER	SUS316L / 316L SS	
58A	KEY	SUS316 / 316 SS	
58B	KEY	SUS316 / 316 SS	
64B	SPACER	SUS304 / 304 SS	
66A	GASKET	T/#9007-LC / PTFE	
66B	GASKET	T/#9007-LC / PTFE	
900	THERMOWELL	SUS304 / 304 SS	

(F-V)	APPROVED	CHECKED	DRAWN	
C:Rewritten(Oct.22'21) K.Nakazumi B:Rewritten(Oct.30'19) A.Nakatani	Kakosho	M.Mori	K.Nagase Jul.19'19	P-34513

FM1257A

TEIKOKU ELECTRIC MFG. CO., LTD.

AS-BUILT

Customer: World Energy Paramount
Equipment Owner: Air Products Manufacturing LLC
APCI No: EN207123-TEI-9V3-00025
Order No: 4505499562
Job No: A8KM
Project Name: World Energy Renewables Project
Item No: 18-P-1857 A/B
Item Name: Aqueous Ammonia Loading Pump
Model:F41-416C4XM-0508TG1-AV

AS-BUILT

TEIKOKU

ESTIMATED PERFORMANCE CURVE

Date : Mar. 07. 2022
No : E29P0058-00
Dwg. No. : SFP-1520A

Item No.	18-P-1857 A/B		Item Name	Aqueous Ammonia Loading Pump			
Model	**F41-416C4XM-0508TG1-AV**						
Frequency	60	Hz	Total Head	80.7	ft		
Voltage	460	V	Capacity	150	gpm	34.07	m3/h
Phase	3		Min.Flow	44.91	gpm	10.2	m3/h
Pole	2		Liquid	19% Aqueous Ammonia			
Output	14.8/11	HP/kW	Temp.	70	degF		
Current	21	A	S.G.	0.93		Vis.	1.1 mPas
			NPSHavail.	10.6	ft	NPSHreq.	7.6 ft

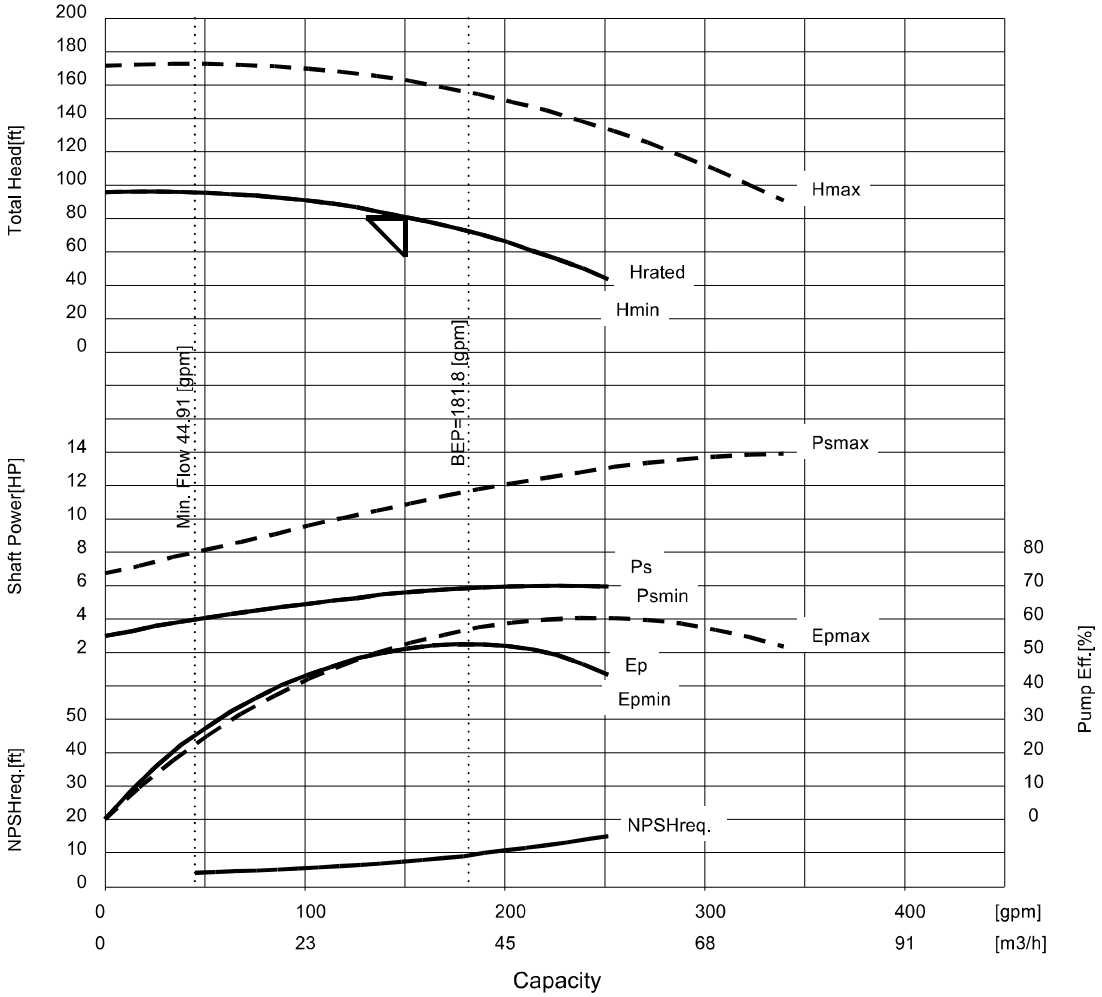

Remarks :

- Shut-off head : 95.7ft
- 81.1ft, 51.1%, 5.58HP, 3558rpm @ rated flow
- 251.8gpm, 5.94HP @ EOC
- 13.91HP @ EOC (max. dia.)
- Ns : 1375, SSS : 10111
- Impeller Dia(mm):166(Max)/ 130(Rated)/ 130(Min)
- Impeller Dia(in.):6.53(Max)/ 5.12(Rated)/ 5.12(Min)
- Proposal Curve E29P0058-00

REV.	Date	Description
D	Mar.7.2022	Revised(K.Nakazumi)
C	Feb.2.2022	Revised(K.Nakazumi)
B	Oct.25.2021	Revised(E.Fujimura)

APPROVED BY	CHECKED BY	DRAWN BY
K.Akashi	**M.Morii**	**K.Nakazumi**

TEIKOKU ELECTRIC MFG. CO., LTD.

UNIS Version 3.6.6
NDTS12_07

6M-0947

SYMBOLS	NAME
R S T	POWER SOURCE
U V W	POWER TERMINAL
MC	MAGNETIC CONTACTOR
TRG	TEIKOKU ROTARY GUARDIAN (Bearing wear and rotating direction indicator.)

熱電対 THERMOCOUPLE	
耐熱クラス THERMAL CLASS	220
設定温度 SETTING CUTOFF TEMP.	190℃/374°F

RESISTANCE TEMPERATURE DETECTOR(RTD)	
ELEMENT	Pt100Ω at 0℃ (R100/R0=1.3851)
CLASS	A(IEC 60751)
LEAD CONNECTION	3 LEAD-TYPE
MEASURING CURRENT	<1mA
TEMPERATURE RANGE	-94℃~+500℃
NUMBER OF ELEMENT	SINGLE

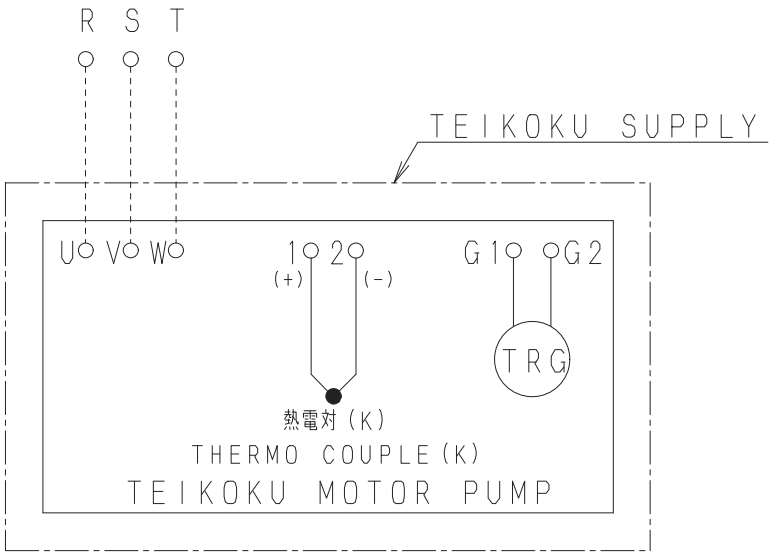

TERMINAL BOX-A(For power)
LEFT SIDE FROM PUMP SUCTION

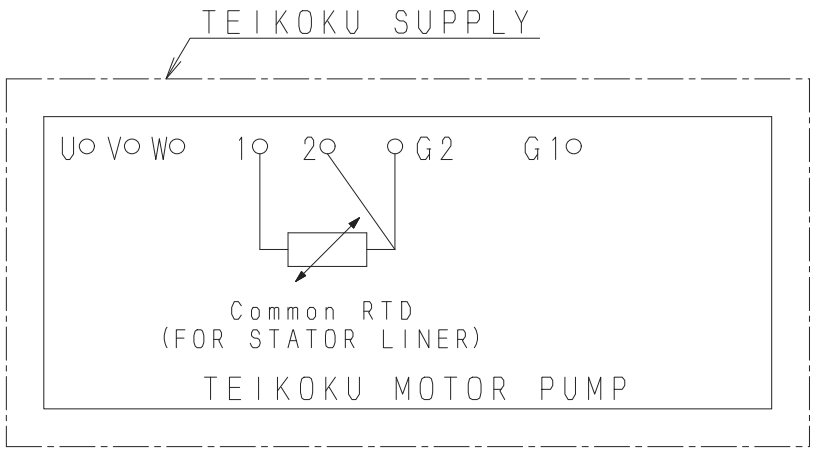

TERMINAL BOX-B(For protection)
RIGHT SIDE FROM PUMP SUCTION

FP1520A

REVISIONS		
B	Revised Feb.1'22	E.Fujimura

AS-BUILT

APPROVED	CHECKED	DRAWN	SCALE
K.Akosho	M.Mori	E.Fujimura Oct·22·'21	FREE

DWG. TITLE 結線図 CONNECTION DIAGRAM

株式会社帝国電機製作所
TEIKOKU ELECTRIC MFG. CO., LTD.

DWG. NO. 6M-0947

B

SPARE PARTS LIST

TYPE	SP-FP1520A	1/1
F－V, R 410－T		

No.	PARTS NAME	DIMENSION	MATERIAL	FOR 1SETS	TOTAL	REMARKS
1	**BEARING B**	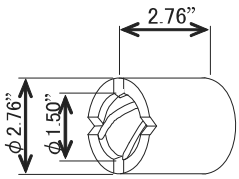	Carbon Graphite	1	4	#15A 70×38×70 (mm) ID No. 4D1794-01-6430-K
2	**BEARING A** (with spiral & straight grooves)	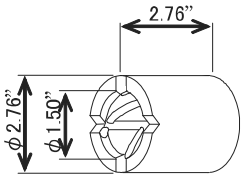	Carbon Graphite	1	4	#15B 70×38×70 (mm) ID No. 4D1799-01-6430-K
3	**SHAFT SLEEVE**	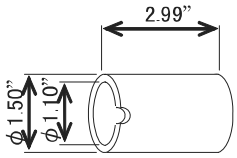	316 SS (SUS316) + Stellite	2	4	#17 38×28×76 (mm) ID No. 4C1164-01-6200-K
4	**GASKET**	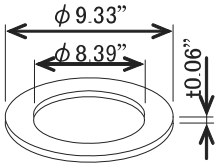	PTFE (T/#9007-LC)	1	4	#66A 237×213×1.5 (mm) ID No. 4H1588-10-9900
5	**GASKET**	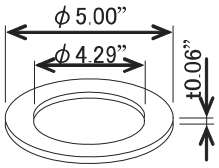	PTFE (T/#9007-LC)	1	4	#66B 127×109×1.5 (mm) ID No. 4H1588-08-9900
6	**THRUST COLLAR**	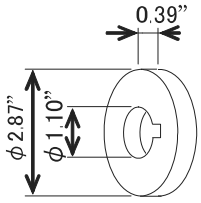	316 SS (SUS316) + Stellite	2	4	#18 73×28×10 (mm) ID No. 4C1167-01-6200-K
7	**LOCK WASHER**	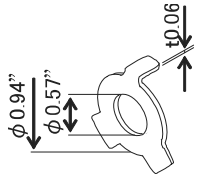	316L SS (SUS316L)	2	2	#57A, #57B 24×14.5×1.5 (mm) ID No. 4G5928-01-0430

REV.		株式会社 帝国電機製作所 TEIKOKU ELECTRIC MFG. CO., LTD.	APPROVED	CHECKED	DRAWN
			K. Akashi	M. Morii	K. Nakazumi Oct. 22. ’21

FP1520A

AS-BUILT

4N-9587-04

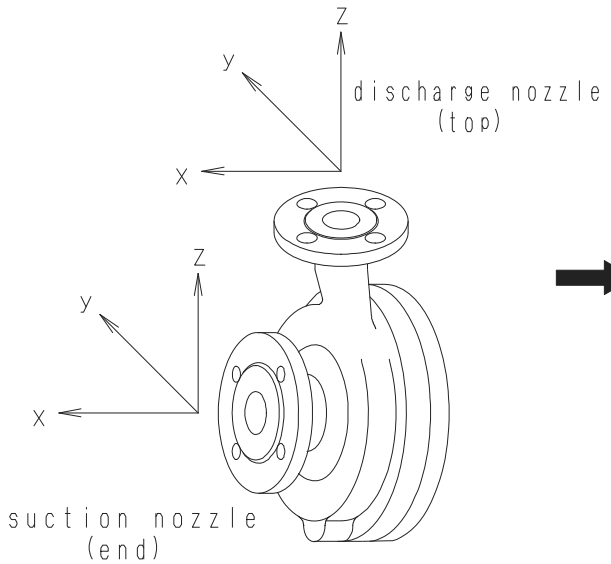

CASING

#No	PUMP TYPE	Fsx	Fsy	Fsz	Fdx	Fdy	Fdz	Msx	Msy	Msz	Mdx	Mdy	Mdz
1	0204	200	160	130	160	130	200	340	170	260	340	170	260
2	0405	200	160	130	160	130	200	340	170	260	340	170	260
3	0408	300	240	200	160	130	200	700	350	530	340	170	260
4	0508	300	240	200	160	130	200	700	350	530	340	170	260
5	0810	400	320	260	240	200	300	980	500	740	700	350	530
6	1015	700	560	460	320	260	400	1700	870	1300	980	500	740
7	1520	1100	850	700	560	460	700	2600	1300	1900	1700	870	1300
8	0305	200	160	130	160	130	200	340	170	260	340	170	260
9	1012	550	440	360	320	260	400	1340	685	1020	980	500	740
10	0608	300	240	200	200	165	250	700	350	530	520	260	395
11	0815	400	320	260	320	260	400	980	500	740	980	500	740

NOTE : F = force (lb) M = moment (lb-ft)
s = suction nozzle
d = discharge nozzle
See the figure for orientation of nozzle loads (x, y, z)

The allowable force & moment is twice of the value shown in table.

FJ1962A

REVISIONS				
B	C	D	E	
Revised Apr. 26, '17 N.Kaiami	Revised May. 30, '17 N.Kaiami	#10 Added Oct. 21, '19 H.Koike	#11 Added Oct. 8, '21 Y.Iguchi	

AS-BUILT

APPROVED	CHECKED	DRAWN	SCALE
K.Akashi	M.Morii	K.Nakazumi Mar. 6, '17	FREE

株式会社帝国電機製作所
TEIKOKU ELECTRIC MFG. CO., LTD.

DWG. TITLE
ALLOWABLE PIPING FORCES AND MOMENTS
T/USA API685 (2nd)

DWG. NO.
4N-9587-04 E

4N-7613

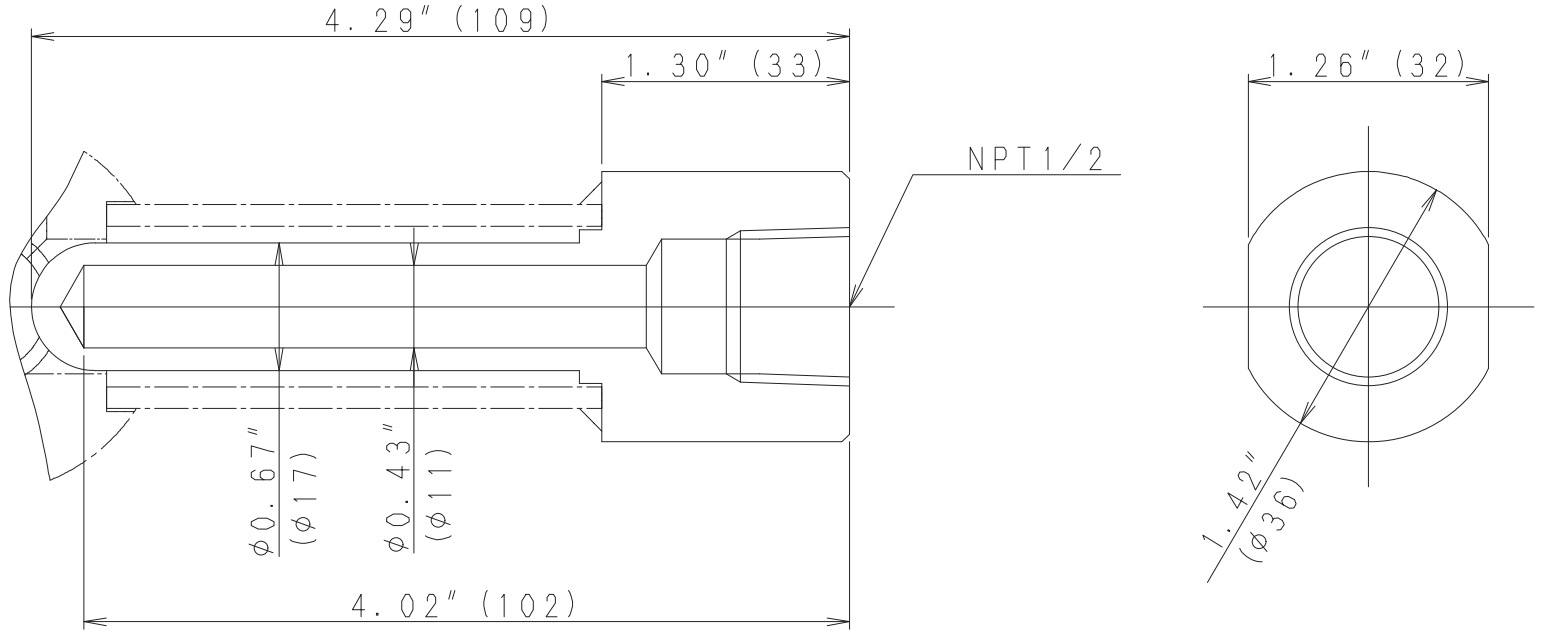

FC1250A
FC1251A

REVISIONS		
B	Rewritten Jul.30'21	K.Nakazumi

AS-BUILT

APPROVED	CHECKED	DRAWN	SCALE
Kakuho	M.Morii	K.Nishizuka Oct・1・'10	FREE

株式会社 帝国電機製作所
TEIKOKU ELECTRIC MFG. CO., LTD.

DWG. TITLE: THERMOWELL

DWG. NO. 4N-7613 B

3M-9975

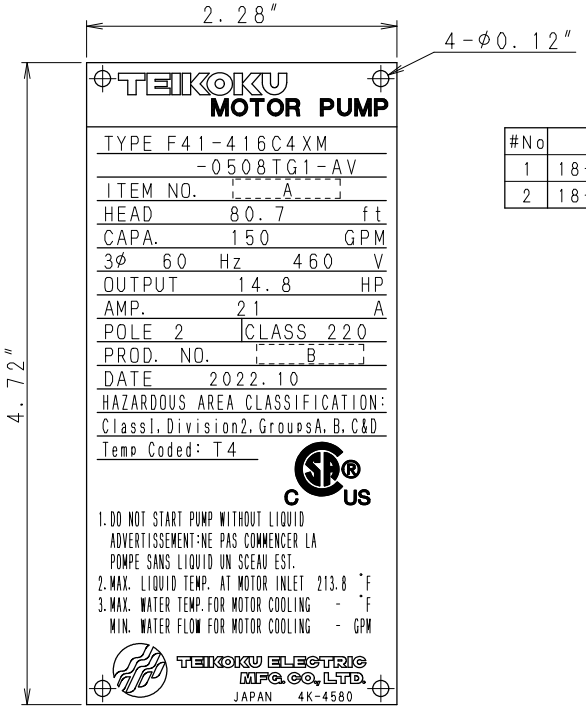

#No	A	B
1	18-P-1857 A	FP-1520A-1
2	18-P-1857 B	FP-1520A-2

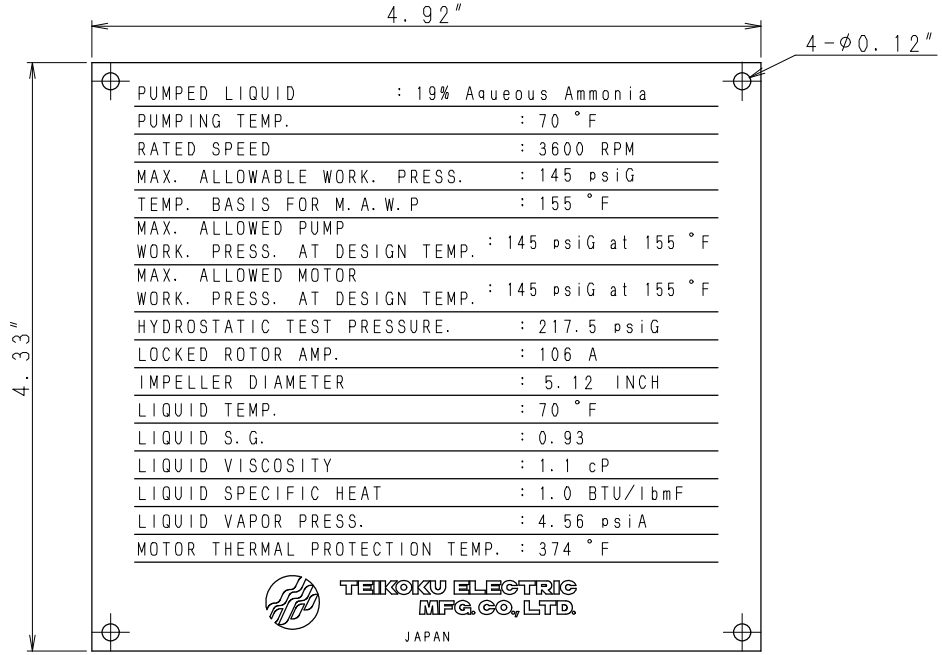

304 SS t=0.02″
(SUS304 t=0.5)

304 SS t=0.02″
(SUS304 t=0.5)

D FP1520A

REVISIONS

B	Revised Oct.4'22 K.Nagase	
C	Revised Nov.14'22 K.Nagase	
D	Revised Jan.31'23 K.Nagase	

明石 森井

AS-BUILT

APPROVED	CHECKED	DRAWN	SCALE	DWG. TITLE
K.Akashi	K.Akashi	K.Nagase May·24·'22	FREE	NAME PLATE

株式会社 帝国電機製作所
TEIKOKU ELECTRIC MFG. CO., LTD.

DWG. NO. 3M-9975

D

FP1520A

TEIKOKU MOTOR PUMP

Installation Manual

IMPORTANT INFORMATION

- Before operating your canned motor pump, read this "Caution Notes for Your Safety" to ensure correct and safe operation or work. It is essential for your safety.

TEIKOKU ELECTRIC MFG. CO., LTD.

AS-BUILT

1. CAUTION NOTES FOR YOUR SAFETY TEIKOKU Canned motor Pumps

FOR YOUR SAFETY (1)

Hazards are listed at two levelsDANGER & CAUTION

Ignoring this warning can cause serious injury or even death

DANGER

Ignoring this warning can cause personal injury and/or damage to the pump

CAUTION

DO NOT RUN DRY!

If the pump is allowed to run dry, the bearings, sleeves and other components could be damaged and serious overheating of the motor windings can occur.

OPEN VENT VALVE SLOWLY!

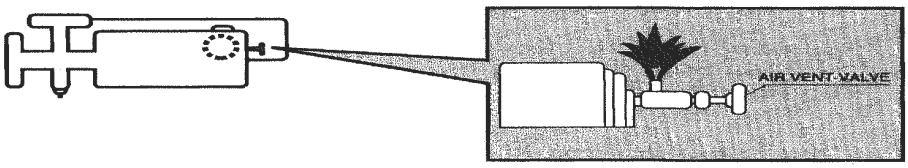

You must exercise caution, even when the pump is not operating, internal pressures can be high at any time. For toxic liquids, proper safety methods must be observed.

AVOID RAPID TEMPERATURE CHANGES!

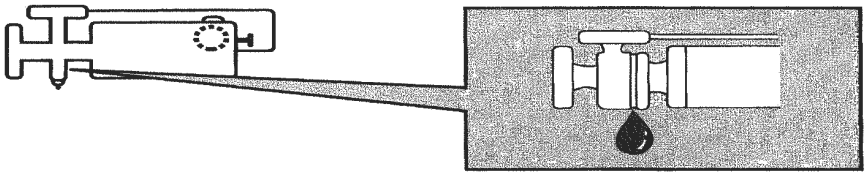

Large changes in temperature must be avoided. Rapid changes can cause leaks to occur in gaskets. Published procedures for proper heating and cooling must be followed. If published procedures are not available check with Teikoku before operating the equipment.

HOT - DO NOT TOUCH!

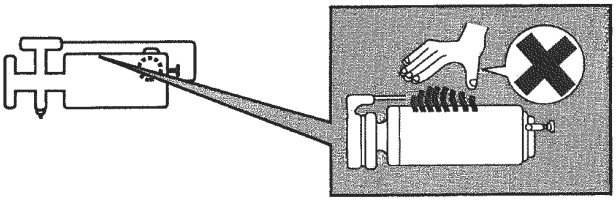

Motor and pump can be hot, even when pumping cold liquids.

FOR YOUR SAFETY (2)

TEIKOKU Canned motor Pumps

Hazards are listed at two levels DANGER & CAUTION

IF MOTOR TRIPS, DO NOT RESTART BEFORE DETERMINING THE CAUSE!

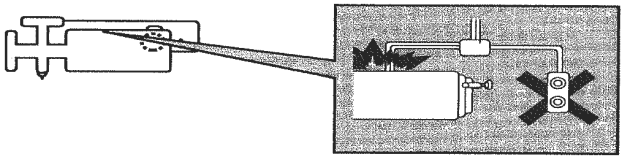

Restarting the motor before ascertaining the cause may result in excessive heat causing pump or motor failure.

DO NOT REMOVE INTERNAL BOLTS IN TERMINAL BOX!

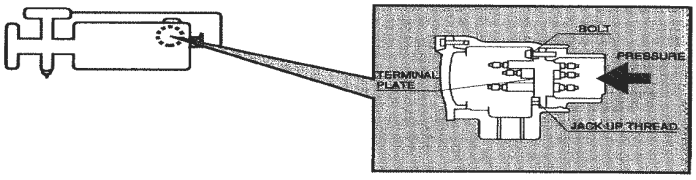

If it is necessary to remove the terminal box for any reason, first loosen the bolts by 2 or 3 turns to check if any internal pressure or liquid is present. You must take measures if the possibility exists that the gas or liquid is toxic or hazardous to personnel or the environment.

⚠ **DO NOT REMOVE ANY BOLTS ON PUMP, MOTOR OR DRAIN PLUGS!**

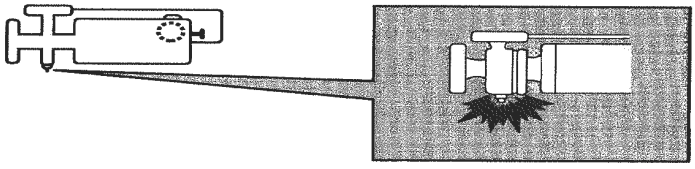

The internal pressure can be higher than the atmosphere. Always loosen the drain plug slowly to relieve any internal pressure before attempting to disassemble the pump. You must take adequate precautions if the liquid in the pump could be hazardous to personnel or the environment.

⚠ **ALWAYS ASSUME THAT THERE IS LIQUID LEFT IN THE PUMP!**

There is always the possibility that residual liquid could remain in the pump and motor in spite of through decontamination. Pay particular attention to the clearance between the shaft and the impeller, bearings, sleeves, bearing housings and gaskets. You must take adequate precautions to protect personnel and the environment if the liquid could be considered hazardous.

⚠ **This pump has been evaluated for use with water only.**