| CONNECTION DATA | | | |
|---|---|---|---|
| POINT | DESCRIPTION | CONN. SIZE | QUANTITY |
| A | Baseplate Drain | 1" FNPT | 1 |
| B | Steam Panel Inlet | 1/2" Flange - ASME B16.5 CL300 R.F. | 1 |
| C | Steam Panel Outlet | 1/2" FNPT | 1 |
| D | Seal Quench Inlet | 3/8" FNPT | 1 |
| E | Seal Quench Outlet | 3/8" FNPT | 1 |
| F | Casing Drain | 1/2" Flange ASME B16.5 CL 150 R.F. | 1 |
| G | B.U. Breather/Oil Fill | 1/2" FNPT | 1 |
| H | B.U. Oil Drain | 1/2" FNPT | 1 |
| I | ESCO Bullseye Sight Glass | 1" FNPT | 2 |
| J | Grounding Lug | 1/2"-13 UNC | 2 |
| K | Steam Condensate Outlet | 3/4" SCHL 40 Pipe - Unthreaded | 1 |
| L | Seal Gland Drain Outlet | 1/2" x .035" Tubing | 1 |

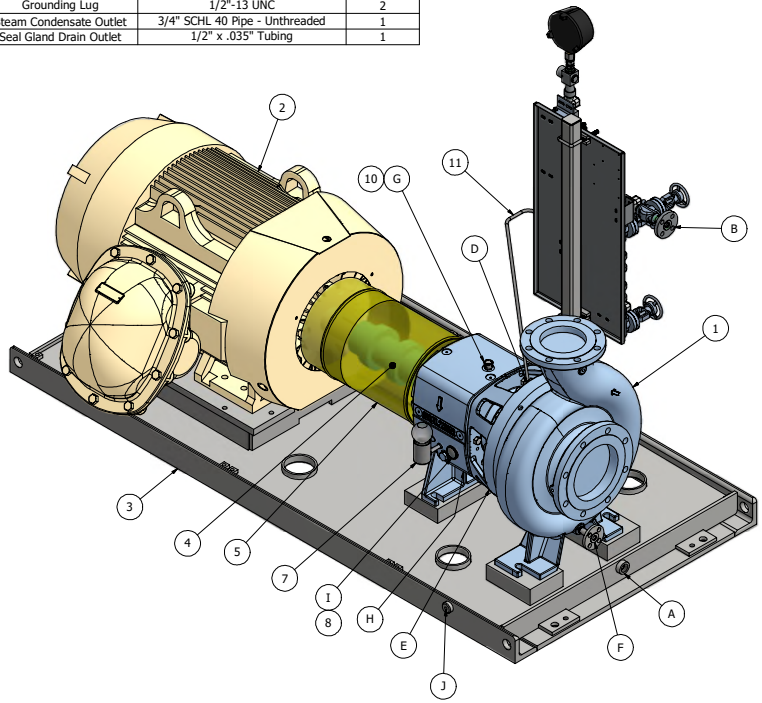


## PLAN 62 P&ID

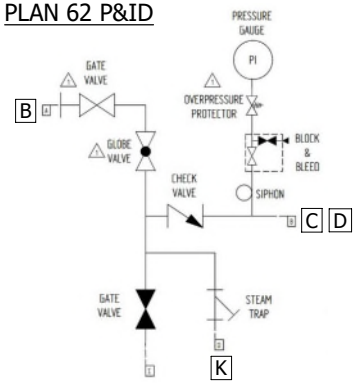


| MAXIMUM NOZZLE LOADINGS | | SUCT | DISCH |
|---|---|---|---|
| FORCES (lb) | Fx | 3500 | 1500 |
| | Fy | 3180 | 3000 |
| | Fz | 2000 | 3500 |
| | Fr | 5135 | 4850 |
| MOMENTS (lb-ft) | Mx | 1500 | 1250 |
| | My | 1480 | 2840 |
| | Mz | 1480 | 2840 |
| | Mr | 2580 | 4210 |

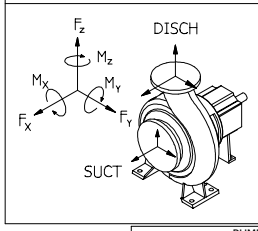


| PUMP SPECIFICATIONS | |
|---|---|
| Size and Type | 8 x 6 x 15 - CPE 32-6G |
| Rotation | CW (as viewed from Driver) |
| Speed | 1785 rpm |
| **FLANGE SPECIFICATIONS** | |
| Suction | 8" - ASME B16.5 CL 150 Raised Face |
| Discharge | 6" - ASME B16.5 CL 150 Raised Face |
| **SEAL SPECIFICATIONS** | |
| Manufacturer | John Crane |
| Seal Type | 5610Q-1 |
| Flush Plan | Plan 03/62 - John Crane Steam Panel |
| **COUPLING SPECIFICATIONS** | |
| Manufacturer | Rexnord/Thomas |
| Type | XTSR71 - 1088 |
| Guards | Painted Aluminum - Barrel Type |
| **MOTOR SPECIFICATIONS** | |
| Manufacturer | ABB Baldor |
| Frame Size | NEMA 447T |
| Type | Severe Duty |
| Power | 200 HP |
| Speed | 1800 RPM |
| Voltage | 460 V |
| Frequency | 60 Hz |
| Phase | 3 PH |
| Enclosure | TEFC |
| Hazardous Area | Class 1 - Div 1 - Gr. CD, T3C |
| **SULZER REFERENCE DOCUMENTS** | |
| MOTOR DATA PACK | MDP00076787000000-01 |
| COUPLING DRAWING | CCD00076787000000-01 |
| MECHANICAL SEAL DRAWING | SLD00076787000000-01 |
| SEAL AUXILIARY EQ. DRAWING | SLD00076787000000-02 |

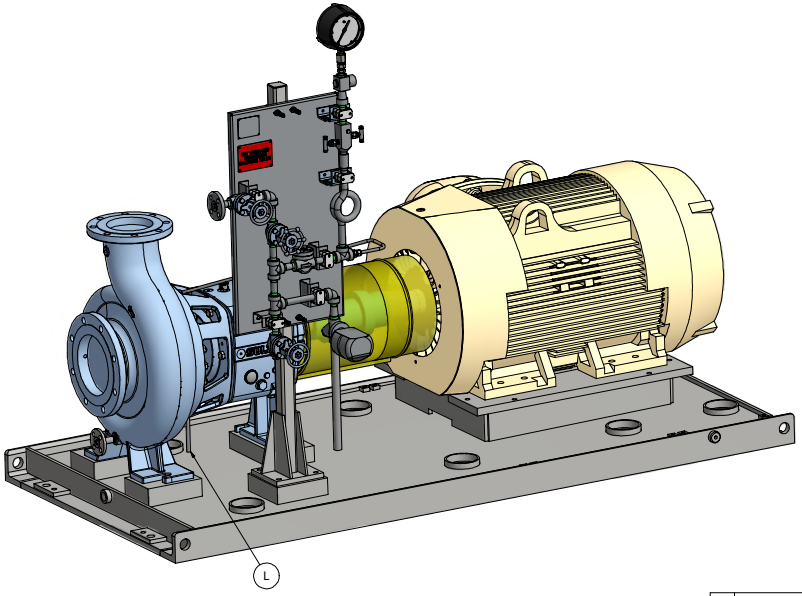


BOM

| ITEM | DESCRIPTION | FURNISHED BY |
|---|---|---|
| 1 | Pump - CPE 31-6G | Sulzer |
| 2 | Motor - 447T | Sulzer |
| 3 | Baseplate - PIP Style | Sulzer |
| 4 | Coupling - Thomas XTSR71 | Sulzer |
| 5 | Guard - Aluminum | Sulzer |
| 6 | John Crane Plan 62 Steam Panel | Sulzer |
| 7 | Trico Oiler - 8 oz | Sulzer |
| 8 | Esco Sight Glass | Sulzer |
| 9 | Sulzer Sight Glass | Sulzer |
| 10 | Bearing Unit Breather | Sulzer |
| 11 | Steam Quench Tubing 3/8" Dia. x .035" 316SS | Sulzer |

- CERTIFIED FINAL
- CERTIFIED FOR NOZZLE & FOUNDATION ONLY
- PRELIMINARY ONLY

**NOTES:**

1. COLORS ARE NOT INTENDED TO REPRESENT "AS SHIPPED" PAINT REQUIREMENTS. THEY ARE FOR QUICK IDENTIFICATION OF PIPING AND EQUIPMENT.


COPYRIGHT © (DATE OF DRAWING) SULZER PUMPS SOLUTIONS (US). ALL RIGHTS RESERVED. NO PART OF THIS DRAWING MAY BE REPRODUCED, DISTRIBUTED OR TRANSMITTED IN ANY FORM OR ANY MEANS, ELECTRONIC OR MECHANICAL, INCLUDING PHOTOCOPYING AND RECORDING, WITHOUT THE EXPRESS **PRIOR** WRITTEN CONSENT OF SULZER PUMPS SOLUTIONS (US).


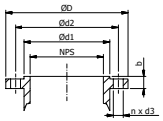


| | NPS | D | d1 | b | d2 | d3 | n |
|---|---|---|---|---|---|---|---|
| | | | | | | | ASME B16.5 CL150 R.F. |
| SUCT | 8.00 | 13.50 | 10.62 | 1.12 | 11.75 | 0.88 | 8 |
| DISCH | 6.00 | 11.00 | 8.50 | 1.00 | 9.50 | 0.88 | 8 |

NOTE: DIMENSIONS IN INCHES.

SHAFTS N.T.S.

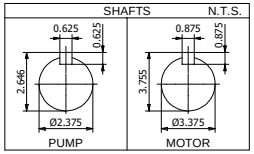


**PROJECT NAME:** WORLD ENERGY RENEWABLES PROJECT
**PROJECT LOCATION:** WORLD ENERGY, PARAMOUNT, CA, USA
**CUSTOMER:** PARAMOUNT ENERGY
**EQUIPMENT OWNER:** AIR PRODUCTS MANUFACTURING LLC
**UNIT:** RAIL AND TRUCK LOGISTICS
WBS NO. 1870

SULZER ORDER NO.: 767870/10-40
CUSTOMER P.O. NO.: 4501819862-0

| POSITION | SERIAL NO. | TAG NO. | SERVICE |
|---|---|---|---|
| 10 | 100260809 | 18-P-1824 | Rail Car Unloading Pump Common Spare |
| 20 | 100260810 | 18-P-1825 | Rail Car Spur #6 Unloading Pump |
| 30 | 100260811 | 18-P-1826 | Rail Car Track #1 Unloading Pump |
| 40 | 100260812 | 18-P-1827 | Rail Car Track #2 Unloading Pump |

| APPROXIMATE WEIGHTS | | |
|---|---|---|
| PUMP: | 805 | lb |
| MOTOR: | 2610 | lb |
| BASEPLATE: | 1350 | lb |
| AUXILIARY: | 210 | lb |
| TOTAL: | 4975 | lb |

| REV | MODIFICATION | NAME | DATE |
|---|---|---|---|
| F | CHANGED PLAN 62 INLET FLANGE CALLOUTS TO CL300, CHANGED P&ID FOR CLARITY | parsdus | 230116 |
| E | UPDATED PLAN 62 P&ID LAYOUT, CHANGED LOCATION OF PLAN 62 INLET, OVERALL SIZES, OTHER DIMS. | parsdus | 220812 |
| D | MOVED STEAM PANEL INLET FLANGE, FIXED COG SYMBOL LOCATION, UPDATED PLAN 62 P&ID | parsdus | 220706 |
| C | ADDED FLANGE TO STEAM PANEL INLET, ADDED SEAL GLAND & STEAM CONDENSATE DRAIN PIPES, LOWERED OVERALL HEIGHT OF PANEL | parsdus | 220602 |
| B | CHANGED BASEPLATE WIDTH, STEAM QUENCH SYSTEM & PID, BOM, | parsdus | 220404 |
| A | CHANGED BASEPLATE DESIGN/DIMS, WEIGHTS, ADDED DIMENSIONS, NOTES, CUSTOMER INFO, ADDED SECOND PAGE | HUGHMAR | 220128 |

SEP. PART LIST No | DESIGN GROUP SPSUS | CAD -DRAWING
REPLACED BY | SUBSTITUTE FOR | ORIGINAL SCALE

CPE 32-6G

SAP 767870/10-40

DIMENSIONAL DRAWING

PIP - 447T - PLAN 62
General Arrangement

DRAWN: 211213 parsdus
CHECKED: 211213 hughmar
APPROVED: 211213 parsdus

SULZER | PART - No. 001 | EN | 304303067 | 1 / 2

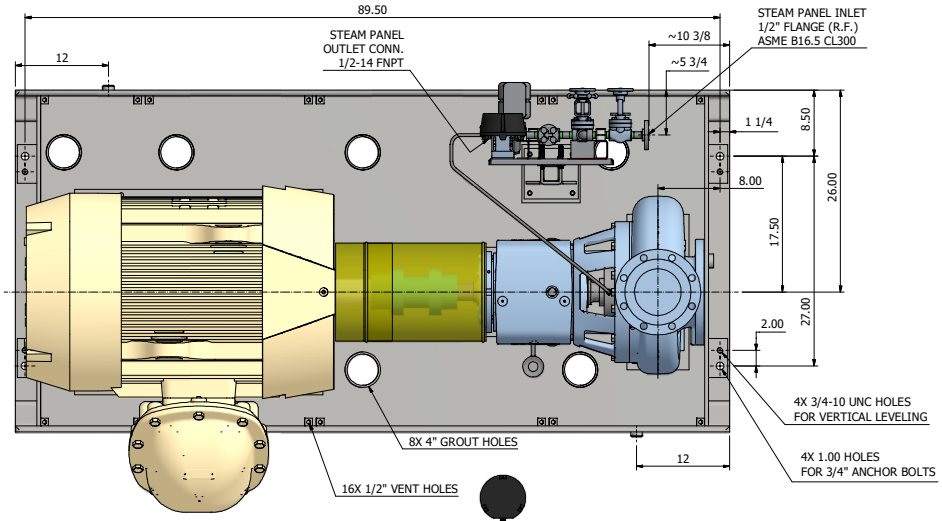


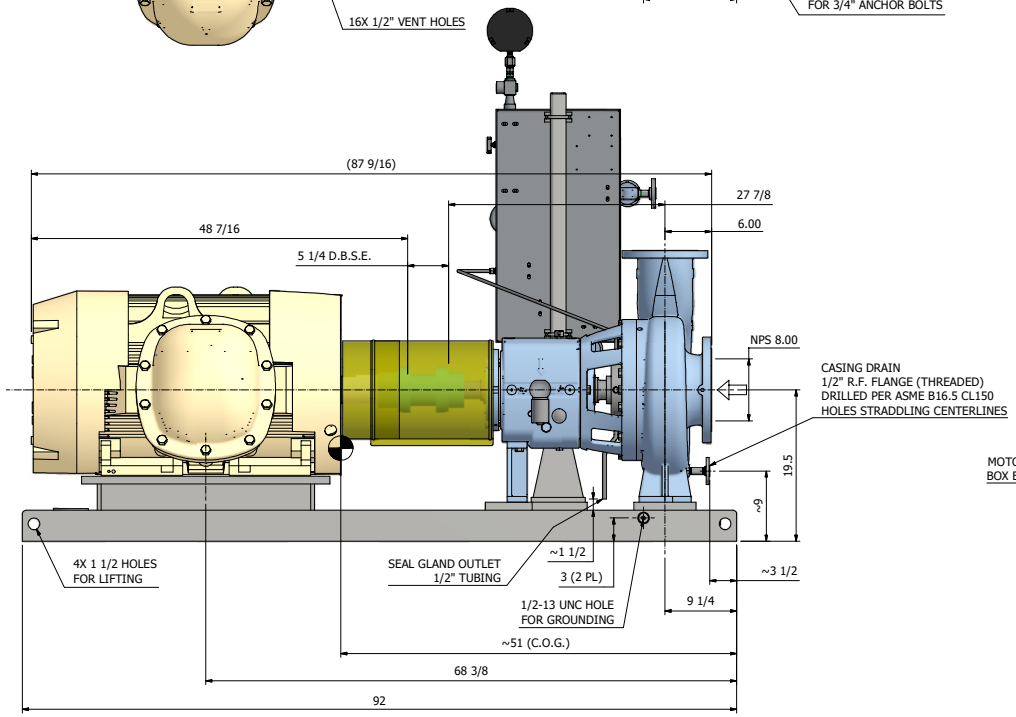


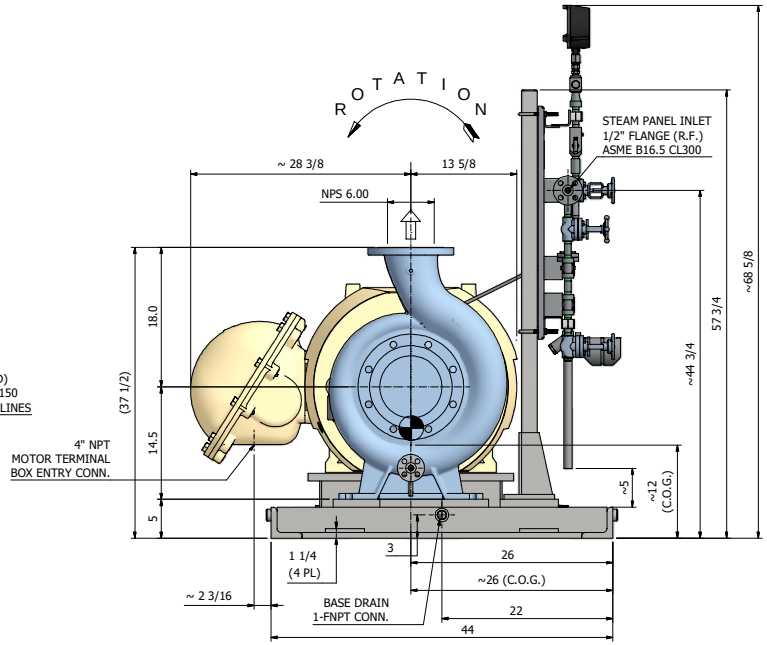


| | | | |
|---|---|---|---|
| SEP. PART LIST No | DESIGN GROUP SPSUS | | CAD -DRAWING |
| REPLACED BY | SUBSTITUTE FOR | | ORIGINAL SCALE |
| CPE 32-6G | DIMENSIONAL DRAWING | | DRAWN: 211213 parsdus |
| | | | CHECKED: 211213 hughmar |
| SAP 767870/10-40 | PIP - 447T - PLAN 62<br>General Arrangement | | APPROVED: 211213 parsdus |
| SULZER | PART - No. 001 | EN | 304303067 | 2 / 2 |