## MATERIALS OF CONSTRUCTION

| ITEM NO. | DESCRIPTION | MATERIAL |
|---|---|---|
| 1 | HEAD | SA516 GR70 |
| 2 | FOLLOWER | SA516 GR70 |
| 3 | END SUPPORT | A36 |
| 4 | TOP BAR | SA240 TYP304 |
| 5 | BOTTOM BAR | SA479 TYP304 |
| 6 | M24 DIA. TIE BAR | SA193 GRB7 ZINC PLTD |
| 7 | TIE BAR HEX NUTS | SA194 GR2H ZINC PLTD |
| 8 | HEAT TRNSFR PLATES GAP 2.5MM | SA240 TYP316L |
| 9 | STUDS 3/4IN 10UNC QTY 8 | SA193 GRB7 ZINC PLTD |
| | NUTS 3/4IN 10UNC QTY 8 | SA194 2H ZINC PLATED |
| 10 | LINERS | SA240 TYP316L |
| | GASKETS | PARADUR (VITON) |
| | SPRAY SCREEN | SA240 TYP304 |

CERTIFIED FINAL

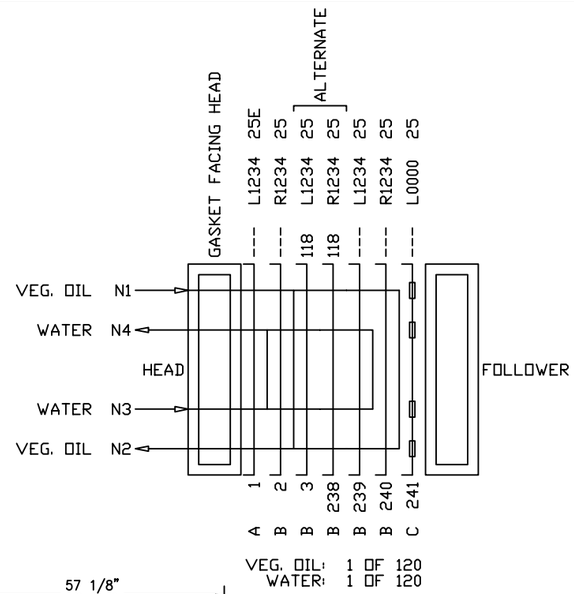


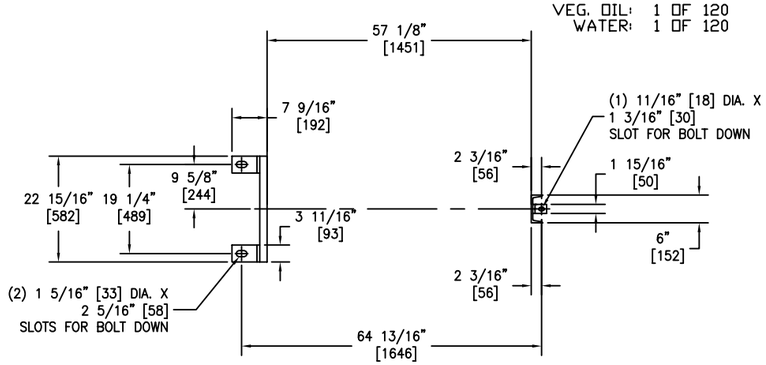


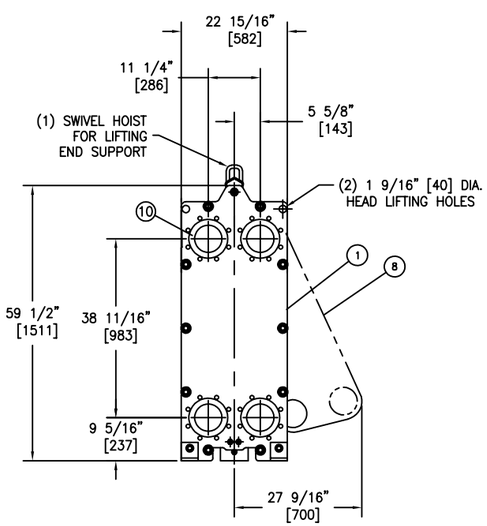


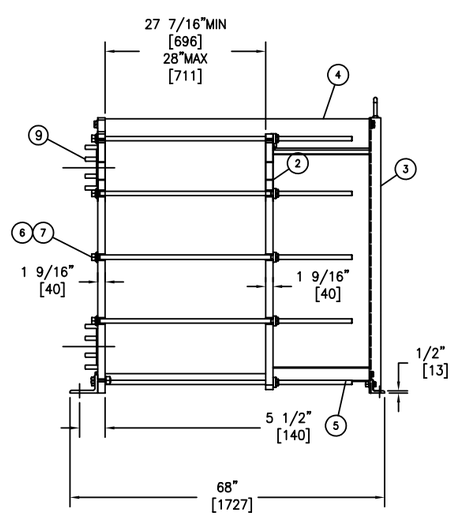


PROJECT - WORPAR
ITEM NBR - 681C2.1
eB NBR - 100199701.001
DATE - 06.09.2021

### PLATE IDENTIFICATION
VIEWED FROM GASKETED SIDE OF PLATE

○ - BLANKED (HOLE) ● - UNBLANKED (NO HOLE)

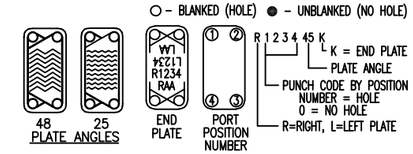


### NOTES

1. THE INSTALLATION, OPERATION AND MAINTENANCE OF THIS HEAT EXCHANGER SHALL BE IN ACCORDANCE WITH THE APV PARAFLOW PLATE HEAT EXCHANGER INSTRUCTION MANUAL.
2. THIS MODEL HEAT EXCHANGER IS TIGHTENED USING A WRENCH ON THE TIE BAR HEX NUTS AT THE HEAD AND FOLLOWER ENDS. CLEAN AND LUBRICATE THE THREADS BEFORE OPENING OR CLOSING USING A LUBRICANT COMPATIBLE WITH CARBON STEEL. **APV RECOMMENDS NEVER-SEEZ REGULAR GRADE. DO NOT USE COMMON GREASE.**
   THE PLATE PACK IS TO BE TIGHTENED IN ACCORDANCE WITH THE INSTRUCTION MANUAL SUPPLIED. DO NOT TIGHTEN BELOW THE MINIMUM DIMENSION SHOWN.
3. THE CUSTOMER IS RESPONSIBLE FOR PROVIDING:
   - ANCHOR BOLTS PER ASTM A36 MINIMUM WITH A RECOMMENDED DIAMETER OF 1 1/8" and 5/8".
   - PROTECTION AGAINST START UP OR OPERATING PRESSURES EXCEEDING THE MAXIMUM ALLOWABLE WORKING PRESSURE.
   - PIPING TO THE FOLLOWER OR CONNECTOR GRIDS THAT ALLOWS FOR FREE MOVEMENT WHEN THE UNIT IS OPENED FOR SERVICE AND PROVIDES FLEXIBILITY FOR THE VARIATION OF THE COMPRESSED PLATAGE DIMENSIONS.
4. LINED STUDDED PORTS ARE PROVIDED WITH A SMOOTH RAISED FACE FINISH, DESIGNED TO MATE WITH ANSI B16.5 CL150 FLANGES.
5. BOLT HOLES STRADDLE CENTERLINES SHOWN.
6. DIMENSIONS ARE SHOWN IN INCHES. DIMENSIONS IN BRACKETS [ ] ARE IN MILLIMETERS.
7. STANDARD TOLERANCES:
   FRAME AND FOUNDATION BOLT LOCATIONS: ±1/4 INCH [±6mm]
   NOZZLE CENTERLINE AND FACE DIMENSIONS: ±1/8 INCH [±3mm]

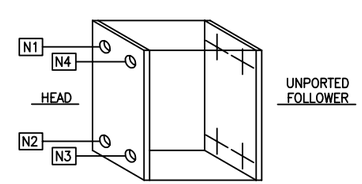


## DESIGN SPECIFICATIONS

| | |
|---|---|
| DESIGN CODE<br>REF CALC: L039 M10 ASME-2019-US | ASME SECTION VIII DIV 1<br>2019 Edition |
| MAX. ALLOWABLE WORKING PRESSURE | 150 PSIG. |
| MINIMUM DESIGN METAL TEMPERATURE | -20 °F. @ 150 PSIG. |
| HYDROTEST PRESSURE | 195 PSIG. |
| MINIMUM OPERATING TEMPERATURE | 32°F. |
| MAXIMUM OPERATING TEMPERATURE | 320°F. |
| SERIAL NUMBER | D2021000059 |
| HEAT TRANSFER AREA | 1021.3 SQ.FT. |
| FRAME SIZE | No. 4 |
| MAXIMUM FRAME CAPACITY | 294 PLATES |
| DRY WEIGHT | 2893 LBS. |
| FLOODED (OPERATING) WEIGHT | 3501 LBS. |
| TOTAL LIQUID VOLUME | 73.3 GALS. |
| FINISH | APV STANDARD PAINT 3196 |
| ACCESSORIES SUPPLIED | ASME U STAMP, SS SHROUD DRIP PAN |

## OPERATING CONDITIONS

| LIQUID | FLOW RATE | TEMP. °F. | ΔP(PSIG) |
|---|---|---|---|
| VEG OIL | 178036 lb/hr | 184.8° → 122.0° | 5.5 |
| WATER | 376720 lb/hr | 98.5° → 113.4° | 7.1 |
| | | | |
| VEG OIL | 178036 lb/hr | 221° → 122° | 5.1 |
| WATER | 376720 lb/hr | 89.8° → 113.3° | 7.2 |

Plates and Gaskets (Total: 241)

| Qty | Material No | ID | Description |
|---|---|---|---|
| 1 | GLS12K4XPX6ADDXA | A | L039S (TL) END 316L 0.6 P.DUR (3VID) |
| 239 | GLS12F4XPX6ADDXA | B | L039S (TL) FLOW 316L 0.6 P.DUR (3VID) |
| 1 | GLS12F0XPX6ADDXA | C | L039S (TL) FLOW 316L 0.6 P.DUR (3VID) |

Frame (Maximum: 294)

| Qty | Material No | Description |
|---|---|---|
| 1 | G3900355AXAXAXAX | Follower |
| 1 | G3900351G1G1G1G1 | Head |
| 1 | GL039XXY10XXX41A | L039 Y-10 FS4 |

Fittings

| Qty | Material No | Pos | Description |
|---|---|---|---|
| 4 | G060HCDPR40A | N1,N2,N3,N4 | 6" 316L C150 PL STUD HEAD |

Accessories

| Qty | Material No | Description |
|---|---|---|
| 1 | GPMI1PHE | PMI |
| 1 | GB510751-4 | DRIP PAN LED 080 FS4 |
| 1 | GASME U STAMP | FOR NON STANDARD UNITS |
| 1 | GB510201-C-696 | SPRAY SCREEN L039 FS4 |

| | | CONNECTION DETAIL |
|---|---|---|
| N1 | 6 IN DIA | STUDDED 316L LINED CLASS 150 |
| N2 | 6 IN DIA | STUDDED 316L LINED CLASS 150 |
| N3 | 6 IN DIA | STUDDED 316L LINED CLASS 150 |
| N4 | 6 IN DIA | STUDDED 316L LINED CLASS 150 |

Desmet Ballestra North America Inc.
Marietta, GA
Project ; WORPAR
D2021000059
Tag; 681C2.1, Client Tag; 19-X-760B

P.O.NO:P000028248


SPX FLOW US , LLC.
1714 Hobbs Drive
Delevan, WI 53115
Tel: 262-728-1900, 800-252-5200
WWW.SPXFLOW.COM



CONFIDENTIALITY NOTE: THE INFORMATION CONTAINED HEREON IS OF A CONFIDENTIAL NATURE AND IS THE PROPERTY OF SPX FLOW TECHNOLOGY SYSTEMS, INC. GOLDSBORO, NC, USA. IT SHALL NOT BE PHOTOGRAPHED, PHOTOSTATED, OR REPRODUCED IN ANY MANNER NOR USED FOR ANY PURPOSE WHATSOEVER EXCEPT WITH WRITTEN PERMISSION OF SPX FLOW TECHNOLOGY SYSTEMS, INC. GOLDSBORO, NC, USA.


| REV. | BY / DATE | CK. BY / DATE | DESCRIPTION AND LOCATION |
|---|---|---|---|
| 02 | MPH/23AUG21 | | ADDED CUSTOMERS COMMENTS, RELASED FOR PRODUCTION |
| 01 | GAL/18MAY21 | | ADDED CUSTOMERS COMMENTS, REISSUED FOR APPROVAL |

| | | | | | |
|---|---|---|---|---|---|
| Checked: | Date: | Supersedes: | Description: L039 M-10 PLATE HEAT EXCHANGER | | |
| | | | Scale: N.T.S. | Sheet: 1 OF 1 | |
| Approved: CG | Date: 11AUG21 | Drawn: GAL | Date: 3MAY21 | Drawing No.: 2100059 | Rev. 02 |

CAD File: 2100059

AUTOCAD