MATERIALS OF CONSTRUCTION

ITEM NO.	DESCRIPTION	MATERIAL
1	HEAD	SA516 GR70
2	FOLLOWER	SA516 GR70
3	END SUPPORT	A36
4	TOP BAR	SA240 TYP304
5	BOTTOM BAR	SA479 TYP304
6	M24 DIA. TIE BAR	SA193 GRB7 ZINC PLTD
7	TIE BAR HEX NUTS	SA194 GR2H ZINC PLTD
8	HEAT TRNSFR PLATES GAP 2.5MM	SA240 TYP316L
9	STUDS 3/4IN 10UNC QTY 8	SA193 GRB7 ZINC PLTD
	NUTS 3/4IN 10UNC QTY 8	SA194 2H ZINC PLATED
10	LINERS	SA240 TYP316L
	GASKETS	PARADUR (VITON)
	SPRAY SCREEN	SA240 TYP304

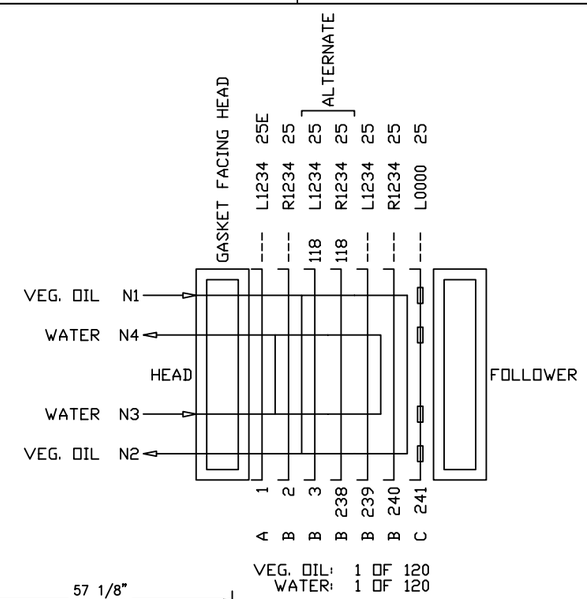

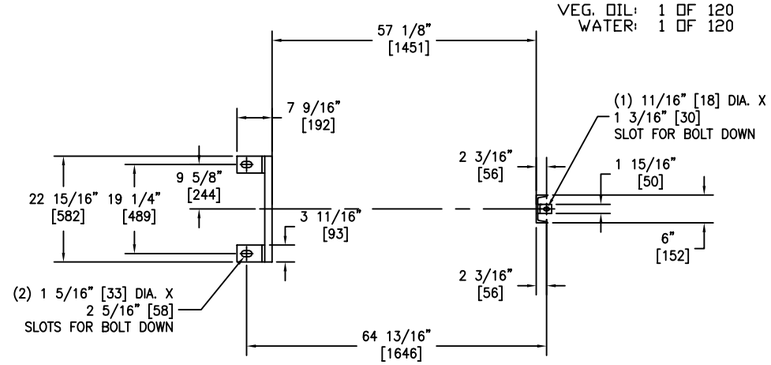

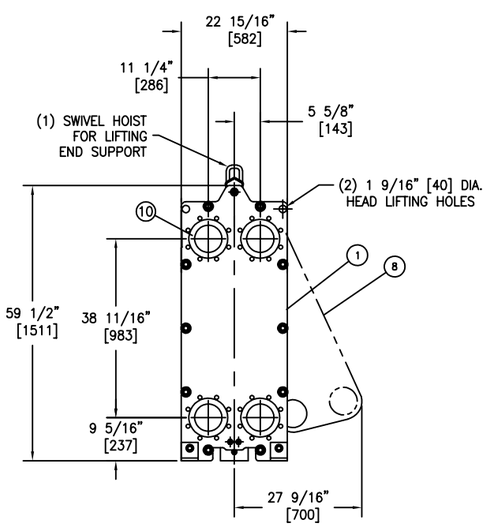

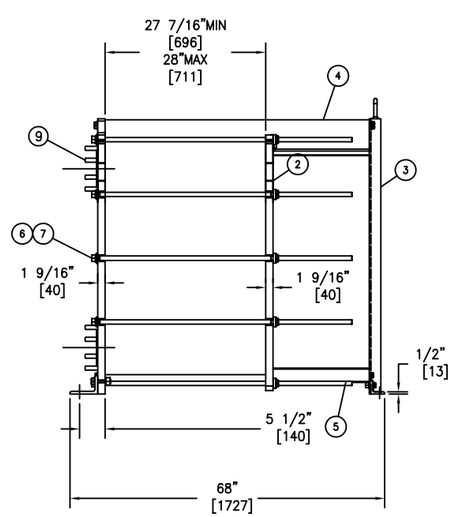

CERTIFIED FINAL

PROJECT - WORPAR
ITEM NBR - 681C1.1
eB NBR - 100199700.001
DATE - 06.09.2021

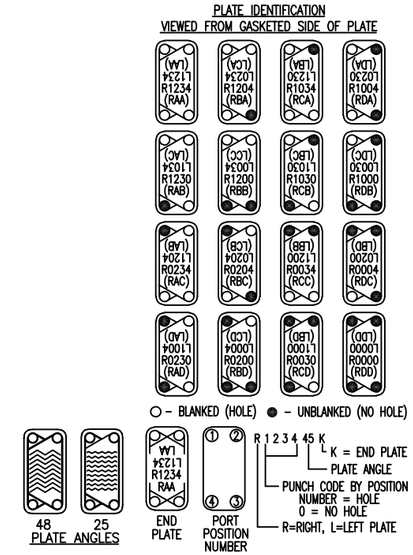

NOTES

1. THE INSTALLATION, OPERATION AND MAINTENANCE OF THIS HEAT EXCHANGER SHALL BE IN ACCORDANCE WITH THE APV PARAFLOW PLATE HEAT EXCHANGER INSTRUCTION MANUAL.
2. THIS MODEL HEAT EXCHANGER IS TIGHTENED USING A WRENCH ON THE TIE BAR HEX NUTS AT THE HEAD AND FOLLOWER ENDS. CLEAN AND LUBRICATE THE THREADS BEFORE OPENING OR CLOSING USING A LUBRICANT COMPATIBLE WITH CARBON STEEL. **APV RECOMMENDS NEVER-SEEZ REGULAR GRADE. DO NOT USE COMMON GREASE.**
   THE PLATE PACK IS TO BE TIGHTENED IN ACCORDANCE WITH THE INSTRUCTION MANUAL SUPPLIED. DO NOT TIGHTEN BELOW THE MINIMUM DIMENSION SHOWN.
3. THE CUSTOMER IS RESPONSIBLE FOR PROVIDING:
   - ANCHOR BOLTS PER ASTM A36 MINIMUM WITH A RECOMMENDED DIAMETER OF 1 1/8" and 5/8".
   - PROTECTION AGAINST START UP OR OPERATING PRESSURES EXCEEDING THE MAXIMUM ALLOWABLE WORKING PRESSURE.
   - PIPING TO THE FOLLOWER OR CONNECTOR GRIDS THAT ALLOWS FOR FREE MOVEMENT WHEN THE UNIT IS OPENED FOR SERVICE AND PROVIDES FLEXIBILITY FOR THE VARIATION OF THE COMPRESSED PLATAGE DIMENSIONS.
4. LINED STUDDED PORTS ARE PROVIDED WITH A SMOOTH RAISED FACE FINISH, DESIGNED TO MATE WITH ANSI B16.5 CL150 FLANGES.
5. BOLT HOLES STRADDLE CENTERLINES SHOWN.
6. DIMENSIONS ARE SHOWN IN INCHES. DIMENSIONS IN BRACKETS [ ] ARE IN MILLIMETERS.
7. STANDARD TOLERANCES:
   FRAME AND FOUNDATION BOLT LOCATIONS: ±1/4 INCH [±6mm]
   NOZZLE CENTERLINE AND FACE DIMENSIONS: ±1/8 INCH [±3mm]

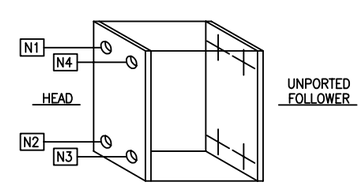

DESIGN SPECIFICATIONS

DESIGN CODE REF CALC: L039 M10 ASME-2019-US	ASME SECTION VIII DIV 1 2019 Edition
MAX. ALLOWABLE WORKING PRESSURE	150 PSIG.
MINIMUM DESIGN METAL TEMPERATURE	-20 °F. @ 150 PSIG.
HYDROTEST PRESSURE	195 PSIG.
MINIMUM OPERATING TEMPERATURE	32°F.
MAXIMUM OPERATING TEMPERATURE	320°F.
SERIAL NUMBER	D2021000058
HEAT TRANSFER AREA	1021.3 SQ.FT.
FRAME SIZE	No. 4
MAXIMUM FRAME CAPACITY	294 PLATES
DRY WEIGHT	2893 LBS.
FLOODED (OPERATING) WEIGHT	3501 LBS.
TOTAL LIQUID VOLUME	73.3 GALS.
FINISH	APV STANDARD PAINT 3196
ACCESSORIES SUPPLIED	ASME U STAMP, SS SHROUD DRIP PAN

OPERATING CONDITIONS

LIQUID	FLOW RATE	TEMP. °F.	ΔP(PSIG)
VEG OIL	178036 lb/hr	184.8° → 122.0°	5.5
WATER	376720 lb/hr	98.5° → 113.4°	7.1
VEG OIL	178036 lb/hr	221° → 122°	5.1
WATER	376720 lb/hr	89.8° → 113.3°	7.2

Plates and Gaskets (Total: 241)

Qty	Material No	ID	Description
1	GLS12K4XPX6ADDXA	A	L039S (TL) END 316L 0.6 P.DUR (3VID)
239	GLS12F4XPX6ADDXA	B	L039S (TL) FLOW 316L 0.6 P.DUR (3VID)
1	GLS12F0XPX6ADDXA	C	L039S (TL) FLOW 316L 0.6 P.DUR (3VID)

Frame (Maximum: 294)

Qty	Material No	Description
1	G3900355AXAXAXAX	Follower
1	G3900351G1G1G1G1	Head
1	GL039XXY10XXX41A	L039 Y-10 FS4

Fittings

Qty	Material No	Pos	Description
4	G060HCDPR40A	N1,N2,N3,N4	6" 316L C150 PL STUD HEAD

Accessories

Qty	Material No	Description
1	GPMI1PHE	PMI
1	GB510751-4	DRIP PAN LED 080 FS4
1	GASME U STAMP	FOR NON STANDARD UNITS
1	GB510201-C-696	SPRAY SCREEN L039 FS4

		CONNECTION DETAIL
N1	6 IN DIA	STUDDED 316L LINED CLASS 150
N2	6 IN DIA	STUDDED 316L LINED CLASS 150
N3	6 IN DIA	STUDDED 316L LINED CLASS 150
N4	6 IN DIA	STUDDED 316L LINED CLASS 150

Desmet Ballestra North America Inc.
Marietta, GA
Project ; WORPAR
D2021000058
Tag; 681C1.1, Client Tag; 19-X-760A

P.O.NO:P000028248

SPX FLOW US , LLC.
1714 Hobbs Drive
Delevan, WI 53115
Tel: 262-728-1900, 800-252-5200
WWW.SPXFLOW.COM

CONFIDENTIALITY NOTE: THE INFORMATION CONTAINED HEREON IS OF A CONFIDENTIAL NATURE AND IS THE PROPERTY OF SPX FLOW TECHNOLOGY SYSTEMS, INC. GOLDSBORO, NC, USA. IT SHALL NOT BE PHOTOGRAPHED, PHOTOSTATED, OR REPRODUCED IN ANY MANNER NOR USED FOR ANY PURPOSE WHATSOEVER EXCEPT WITH WRITTEN PERMISSION OF SPX FLOW TECHNOLOGY SYSTEMS, INC. GOLDSBORO, NC, USA.

REV.	BY / DATE	CK. BY / DATE	DESCRIPTION AND LOCATION
02	MPH/23AUG21		ADDED CUSTOMERS COMMENTS, RELASED FOR PRODUCTION
01	GAL/18MAY21		ADDED CUSTOMERS COMMENTS, REISSUED FOR APPROVAL

Checked:	Date:	Supersedes:		Scale: N.T.S.	Sheet: 1 OF 1
Approved: CG	Date: 11AUG21	Drawn: GAL	Date: 3MAY21	Drawing No.: 2100058	Rev. 02

Description: L039 M-10 PLATE HEAT EXCHANGER

CAD File: 2100058

AUTOCAD