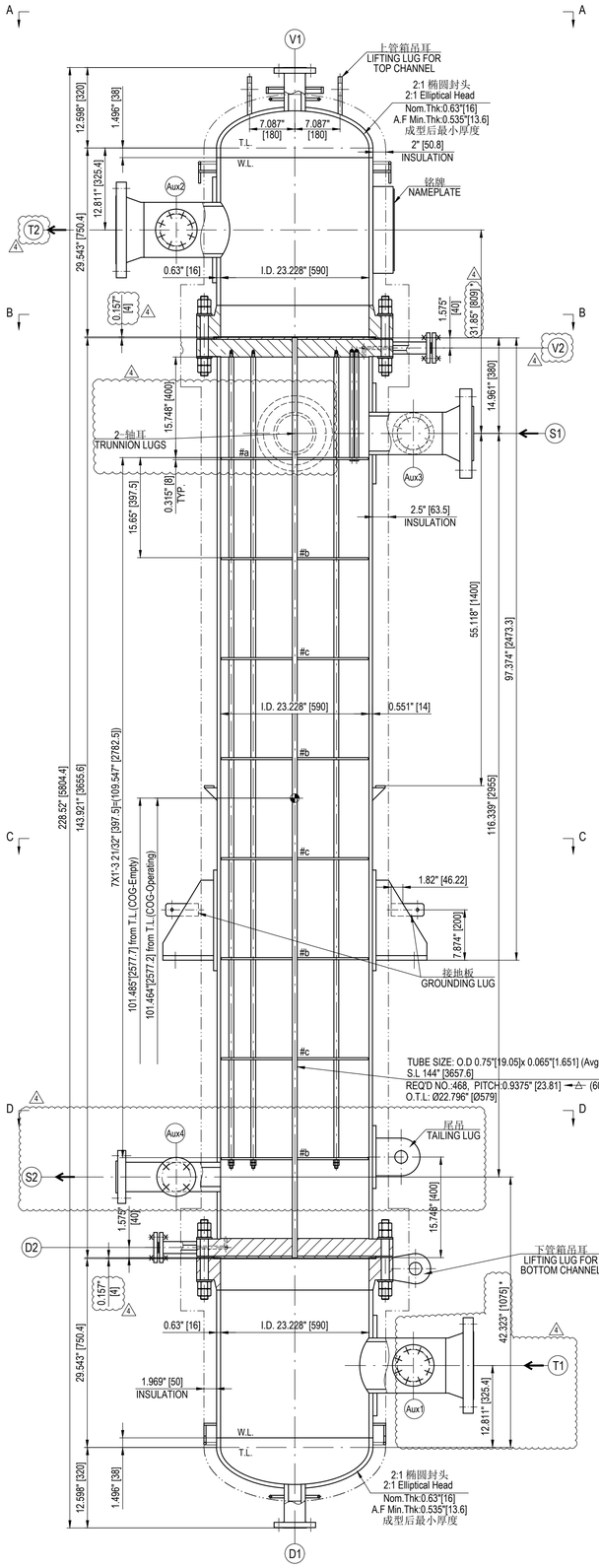

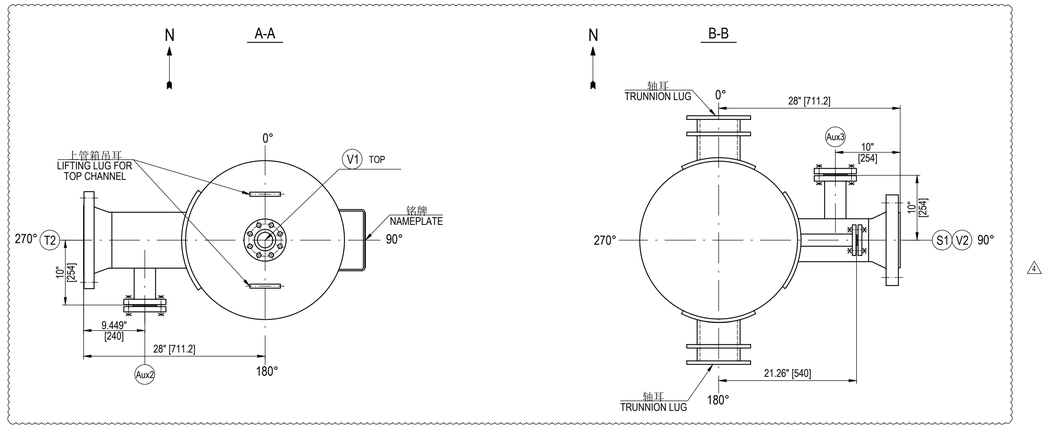

布管详图
DETAIL OF TUBE LAYOUT

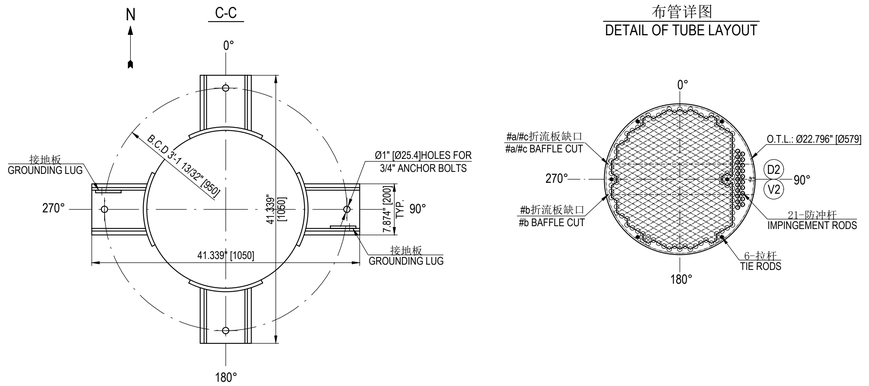

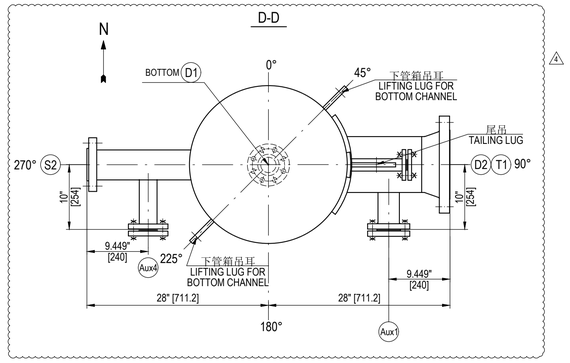

项目规范 PROJECT SPECIFICATION			
NO.	DOC. NO.	DESCRIPTIONS	Rev.
1	A8KM-PP-000-200001-A	Plant Site Data Sheet	0B
2	A8KM-PP-000-400002-A	Structural Data for Mechanical Equipment General	0
3	A8KM-PP-000-500005-A	Design of Lifting Component for Mechanical Equipment	0
4	A8KM-PP-000-500510-A	Hot Insulation	0C
5	A8KM-PP-000-500512-A	Positive Material Identification - PMI	0
6	A8KM-PP-000-500520-A	Painting	0D
7	A8KM-PP-000-500530-A	Materials and Fabrication Requirements for Duplex Stainless Steel	0
8	A8KM-PP-000-500532-A	Materials and Fabrication Requirements for Carbon Steel Equipment and Piping in Wet H2S Environments	0B
9	A8KM-PP-000-500550-A	Welding-NDE Requirements for Equipment	0C
10	A8KM-PP-000-50720-A	Shell and Tube Heat Exchangers	0
11	SPEC-MED-DOC001	Design Basis for Mechanical Equipment	0
12	SPEC-ENG-DOC001	Supplier-Designed, Shop-Fabricated Pressure Equipment	0
13	SPEC-ENG-DOC002	Shell & Tube Heat Exchanger	0
14	SPEC-ENG-MQ042	Material Certification and Retesting Requirements	0
15	SPEC-ENG-MQ057	Mechanical Equipment Gaskets	1
16	4WGN-10001	Shipment and Packing Specification for Equipment and Materials being Exported Directly by Vendors	6
17	4WEQ-1051	Welding of HyCO Plant Equipment	0
18	4WPI-670210	Bolt-Up Procedure for Flanged Connections	0

图纸汇总表 DRAWING SUMMARY			
名称 TITLE	图号 DWG. NO.	张数 SHEET NO.	项目文件号 PROJECT DOCUMENT NO.
运输及吊装图 SHIPPING AND LIFTING DETAIL DRAWING	WXCE6824-06	1/1	HOLD
铭牌图 NAMEPLATE DETAIL DRAWING	WXCE6824-05	1/1	EN207122-WUXI-9V3-00167
鞍座及吊耳详图 SADDLE AND LIFTING LUG DETAIL DRAWING	WXCE6824-04	1/1	EN207122-WUXI-9V3-00167
管口详图 NOZZLE DETAIL DRAWING	WXCE6824-03	1/1	EN207122-WUXI-9V3-00167
管束详图 BUNDLE DETAIL DRAWING	WXCE6824-02	1/1	EN207122-WUXI-9V3-00167
壳体图 SHELL DETAIL DRAWING	WXCE6824-01	1/1	EN207122-WUXI-9V3-00167
装配图 II GENERAL ASSEMBLY DRAWING II	WXCE6824-00-II	2/2	EN207122-WUXI-9V3-00152
装配图 I GENERAL ASSEMBLY DRAWING I	WXCE6824-00-I	1/2	EN207122-WUXI-9V3-00152

扭矩表 TORQUE TABLE		
部件 PART	螺栓规格 BOLT SIZE	扭矩 (lbf-ft) TORQUE
设备法兰 GIRTH FLANGE	1 1/8"-8UN	649.7

材料表 MATERIAL			
CHANNEL		TIE RODS	SS304
CHANNEL HEAD	SA-516 Gr.70N	SPACERS	SS304
CHANNEL SHELL	SA-516 Gr.70N	EXTERNAL ATTACHMENTS	SA-516 Gr.70N
CHANNEL FLANGE	SA-266 Gr.2N	EXTERNAL BOLTING/ NUT (CHANNEL)	SA-193 Gr.B7M / SA-194 Gr.2HM
NOZZLE NECK	SA-105N	EXTERNAL BOLTING/ NUT (SHELL)	SA-193 Gr.B7 / SA-194 Gr.2H
NOZZLE FLANGE	SA-105N	INTERNAL BOLTING/ NUT	NA
SHELL		SUPPORTS	SA-516 Gr.70
SHELL	SA-516 Gr.70N	ANCHOR BOLTS	ASTM F3125 Grade A325(BY OTHERS)
NOZZLE NECK	SA-105N	TUBESIDE GASKET	Kammprofile (Note 1)
NOZZLE FLANGE	SA-105N	GROUNDING LUG	SS.304
TUBE BUNDLE		NAMEPLATE	SS.304
TUBES	SA-789 S32205(seamless)	NAMEPLATE BRACKET	SA-516 Gr.70N
TUBESHEETS	SA-266 Gr.2N CLADDING 0.315"[8] SA-240 S32205	JACK SCREW / DOWEL PIN	/
BAFFLES	SA-240 304	NOTE1: Serrated solid SS316 core with flexible graphite facings.	

基础载荷 BASE LOAD (ASD)				
	操作 OPERATION		水压 HYDRO TEST	
	风载 WIND	地震 SEISMIC	风载 WIND	地震 SEISMIC
剪应力 SHEAR FORCE lbf	347	6128	173.5	/
弯矩 BENDING MOMENT lbf-ft	563	27146	281.5	/

无损检验 NONDESTRUCTIVE EXAMINATION

焊接接头型式或焊缝编号 JOINT TYPE OR WELD SEAM NO		焊接接头系数 JOINT EFFICIENCY	射线探伤 R.T 检测比例 EXAM. RATE	射线探伤 R.T 合格级别 CLASS OF ACC.	超声波探伤 U.T Appendix 12	磁粉探伤 M.T Appendix 6	着色探伤 P.T Appendix 8	备注 REMARKS
A,B类 CATEGORY A,B	壳程 SHELL SIDE	0.85	SPOT	UW-52	/	100%	/	
	管程 TUBE SIDE	1.0	FULL	UW-51	/	100%	/	
C类 CAT. C 壳程 SHELL SIDE	管板与壳体 TUBESHEET TO SHELL	/	/	/	/	100%	/	
	接管与法兰 NOZZLE TO FLANGE	/	/	/	/	100%	/	
C类 CAT. C 管程 TUBE SIDE	设备法兰与壳体 GIRTH FLANGE TO SHELL	1.0	FULL	UW-51	/	100%	/	
	接管与法兰 NOZZLE TO FLANGE	/	/	/	/	100%	/	
D类 TYPE D	接管与壳体 NOZZLE TO SHELL	/	/	/	/	100%	/	
换热管与管板的连接接头 TUBE TO TUBESHEET JOINT		/	/	/	/	/	100%	

注/NOTE:
无损检测要求见"其他要求和说明第5条"
For requirements of NDT, see clause 5 of "Other Requirements and Notes"

设计.制造.检验与验收数据表
DATA SHEET OF DESIGN,FABRICATION,INSPECTION & ACCEPTANCE

设计.制造.检验与验收标准
STANDARDS OF DESIGN,FABRICATION ,INSPECTION & ACCEPTANCE

1. ASME SECTION VIII DIV.1 2021 ED.
2. TEMA Tenth Edition CLASS R
3. API660-2020.
4.NACE MR0103
5.NBR Registration

设计数据 DESIGN DATA

名称 DESIGNATION	壳程 SHELL SIDE	管程 TUBE SIDE
工作压力(NORMAL) psig[barg] OPERATING PRESSURE	150 [10.34]	94.5 [6.52]
设计压力(内压/外压) psig[barg] DESIGN PRESSURE (INT/EXT)	232 [16]/ 15 [1.03]@300°F[148.9]°C	200 [13.79]/ 15 [1.03]@300°F[148.9]°C
最大允许工作压力 psig[barg] MAWP(INTERNAL)	527.5 [36.37] (Limited by nozzle flange)	379.6 [26.17] (Limited by nozzle flange)
最大允许工作压力 psig[barg] MAWP(EXTERNAL)	15 [1.03]	15 [1.03]
最大允许压力 psig[barg] MAP	740 [51] (Limited by nozzle flange)	714.97 [49.29] (Limited by tubesheet)
工作温度 (Inlet / Outlet) °F[°C] OPERATING TEMPERATURE	366 [185.5]/ 365.5[185.3]	321.1[160.6]/ 328.74[164.85]
设计温度 °F[°C] DESIGN TEMPERATURE	430 [221.1]	380 [193.9]
最低设计金属温度 °F[°C] MDMT	32 [0]	32 [0]
工作介质 OPERATING FLUID	MP Steam	Acid Gas Stripper Bottoms Liquid
介质密度(Inlet / Outlet) lb/ft³ [kg/m³] DENSITY OF FLUID	62.4 [1000]	56.2[900]/0.2437[3.9]
介质致死工况 FLUID LETHAL SERVICE	非致死 Nonlethal	非致死 Nonlethal
特殊工况/程度 SPECIAL SERVICE / SEVERITY	NO	WET SOUR/Medium
腐蚀裕量 In.[mm] CORROSION ALLOWANCE	0.125 [3.175]	0.25 [6.35] On CS Parts
RT 检测类别 RT TYPE	RT-3	RT-1
焊接接头系数(筒体/封头) JOINT EFFICIENCY (SHELL/HEAD)	0.85/-	1.0/1.0
容积 ft³ [m³] CAPACITY	16.6 [0.49]	28.25 [0.8]
程数 NUMBER OF PASSES	1	1
冲击试验 IMPACT TEST	不要/NO	不要/NO
焊后热处理 POST-WELD HEAT TREATMENT	不要/NO	要/YES (管箱/CHANNEL)
成形后热处理 POST FORMIING HEAT TREATMENT	不要/NO	要/YES (封头 / HEAD)
保温类型/厚度 In.[mm] INSULATION TYPE/THK	IH/2.5[63.5]	IH/2[50.8]
工厂水压试验 psig[barg] SHOP HYDROSTATIC TEST Per UG-99(c)	962[66.33]	928.62[64.03]
现场水压试验 psig[barg] FIELD HYDROSTATIC TEST Per UG-99(b)	685.82[47.28]	493.5[34.03]
气密试验 psig[barg] PNEUMATIC TEST	/	/

NB REGISTRATION	YES
ASME CERTIFICATE	YES (With U Designator)
换热器型式 EXCHANGER TYPE(TEMA)	BEM
传热面积 ft² [m²] HEAT TRANSFER SURFACE AREA (Effective)	1055.7[98]
换热管与管板的连接 TUBE-TO-TUBESHEET JOINT	强度焊+贴胀 Strength Weld+Light Expanded
换热管间距/排列方式/数量 PITCH/PATTERN/NO.	0.9375" [23.81] / 60° / 468
换热管外径/壁厚/直段管长 TUBE O.D./WALL THK./LENGTH	0.75" [19.05] / 0.065" [1.651] Avg. / 144" [3657.6]
地震设计规范 SEISMIC DESIGN CODE	ASCE 7-2016 (NOTE 1)
风载设计规范 WIND DESIGN CODE	ASCE 7-2016 Exposure category C
基本风速 mph.[m/s] BASIC WIND VELOCITY	101 [45.2]
管口方位 NOZZLE ORIENTATION	按本图 AS PER THIS DWG
制造重量 Lb[Kg] FABRICATED WEIGHT	8700[3945]
空重 Lb[Kg] EMPTY WEIGHT	8930[4050]
安装重量 Lb[Kg] ERECTED WEIGHT	8930[4050]
操作重量 Lb[Kg] OPERATING WEIGHT	11585[5255]
水压试验(现场)重量 Lb[Kg] TEST WEIGHT(FIELD)	11765[5340]
管束重量 Lb[Kg] TUBE BUNDLE WEIGHT	3970[1800]

NOTE 1: ASCE 7-2016, S1=0.579g, Ss=1.616g SDs=1.077g, SD1=0.996g, Site Class=D IMP. FACTOR=1.5, DESIGN CATEGORY=D, Section 13.3.1 with ap=1.0, Rp=2.5, Ip=1.5 and z=h, Fa=1.0, Fv=1.721.

管口表 NOZZLE SCHEDULE

符号 MARK	数量 QTY.	公称尺寸 NPS	壁厚等级 SCH /THK	公称压力 RATING	连接标准 CONNECTING STANDARD	法兰型式/密封面 FLG.TYPE/S.F.	法兰密封面到设备中心线长度 PROJECTION FROM VESSEL C.L. TO FLANGE FACE	用途或名称 SERVICE	备注 REMARKS
S1	1	6 "	0.562" [14.27]	CL600	ASME B16.5-2017	WN/ RF	28"	SS INLET	
S2	1	3 "	0.803" [20.4]	CL600	ASME B16.5-2017	LWN/ RF	28"	SS OUTLET	
T1	1	8 "	0.594" [15.09]	CL300	ASME B16.5-2017	WN/ RF	28"	TS INLET	
T2	1	8 "	0.594" [15.09]	CL300	ASME B16.5-2017	WN/ RF	28"	TS OUTLET	
Aux.1-3	3	2 "	0.654" [16.6]	CL300	ASME B16.5-2017	LWN/ RF	见图/SEE DWG	AUXILIARY	With BF & Gasket & Bolt & Nut
V1	1	2 "	0.654" [16.6]	CL600	ASME B16.5-2017	LWN/ RF	见图/SEE DWG	TS VENT	
D1	1	2 "	0.654" [16.6]	CL600	ASME B16.5-2017	LWN/ RF	见图/SEE DWG	TS DRAIN	
V2	1	3/4 "	0.57" [14.475]	CL300	ASME B16.5-2017	LWN/ RF	21.26"	SS VENT	With BF & Gasket & Bolt & Nut
D2	1	3/4 "	0.57" [14.475]	CL300	ASME B16.5-2017	LWN/ RF	21.26"	SS DRAIN	With BF & Gasket & Bolt & Nut
Aux.4	1	1 1/2 "	0.628" [15.95]	CL300	ASME B16.5-2017	LWN/ RF	见图/SEE DWG	AUXILIARY	With BF & Gasket & Bolt & Nut

管口载荷表 NOZZLES LOADS LIST

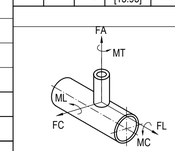

NOZZLE	NPS	FORCES (UNIT: Lbf) FA	FL	FC	MOMENTS (UNIT: Lbf·ft) MC	ML	MT
S1	6"	2800	3500	3500	5340	6760	8620
S2	3"	1060	1340	1340	1080	1360	1720
T1	8"	2080	2600	2600	5160	6560	8340
T2	8"	2080	2600	2600	5160	6560	8340
V1,D1	2"	360	450	450	250	320	400

Note:2xAPI 300# Shell Side and 2xAPI 150# Tube side nozzle loads considered. Flange rating changed to 300# & 600# due to nozzle load impact on flange rating as required by UG-44 (b).1xAPI 300# nozzle load considered on tube side vent / drain nozzle. Flange rating changed from 300# to 600# due to nozzle load impact on flange rating as required by UG-44 (b).

AIR PRODUCTS world energy FLUOR

Air Products Project Number	/	Fluor Project Number	A8KM
Project Name	World Energy Renewables Project	RFQ No.	A8KM-4-410-RQ
Purchase Order Number	/	PO/Contract No	/
Air Products Open Text document number	EN207122-WUXI-9V3-00152	Project Area	/
Client	WORLD ENERGY PARAMOUNT	Client Doc No:	/

版次 REV	版次说明/DESCRIPTION	设计/PREPARED	审核/REVIEWED	批准/APPROVED	日期/DATE
04	供批准/ ISSUED FOR APPROVAL	Tingting Wen	Chengqian Yuan	Hu Yang	06-May-23
03	供批准/ ISSUED FOR APPROVAL	Tingting Wen	Chengqian Yuan	Hu Yang	01-Mar-23
02	供批准/ ISSUED FOR APPROVAL	Tingting Wen	Chengqian Yuan	Hu Yang	12-Dec-22

本图纸版权为无锡化工装备股份有限公司财产,未经本公司许可不得转让或复制给第三方.
The copyright of this drawing is the property of China Wuxi Chemical Equipment Co.,Ltd.(WCE),unauthorized disclosure or duplication to the third party is not permitted.

无锡化工装备股份有限公司
WUXI CHEMICAL EQUIPMENT CO.,LTD.

设计项目 DESIGN ITEM	World Energy Renewables Project	设计阶段 DESIGN PHASE	详细设计 Detail Design
设计 PREPARED		设备位号 ITEM NO.	18-X-250
审核 REVIEWED		图号 DWG. NO.	WXCE6824-00
批准 APPROVED		比例: SCALE	1:12
		第 1 页 共 2 页 PAGE 1 OF 2	

Acid Gas Stripper Reboiler
GENERAL ASSEMBLY DRAWING I