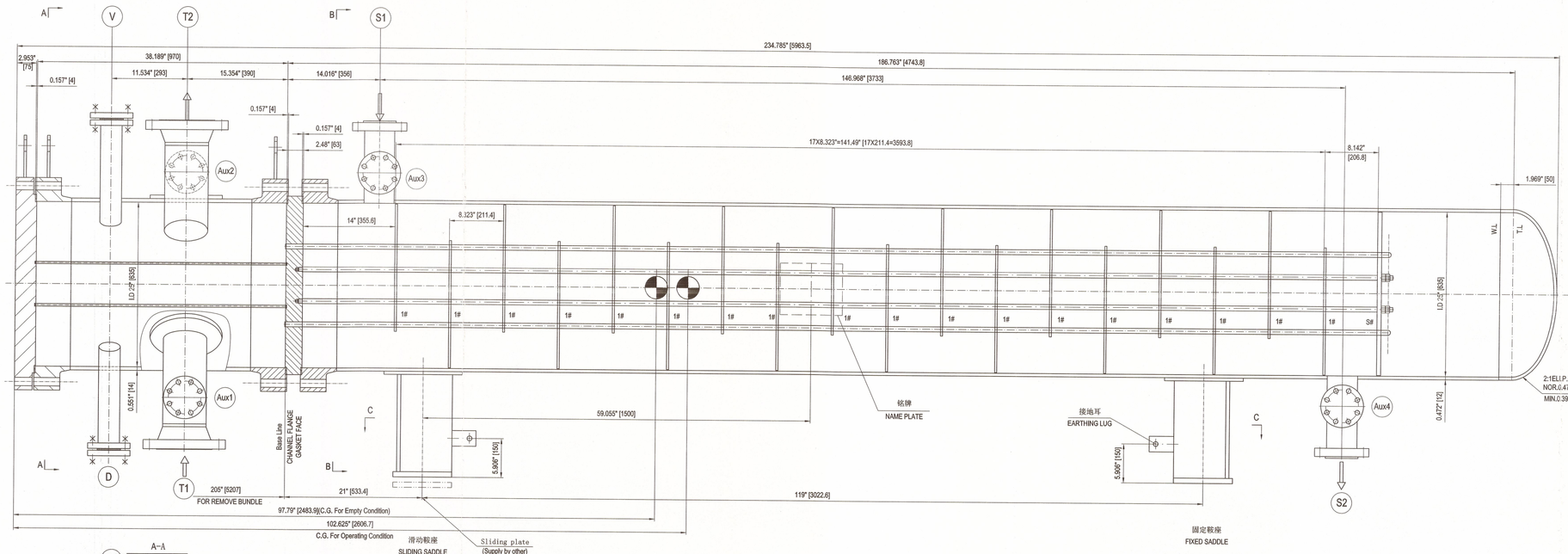

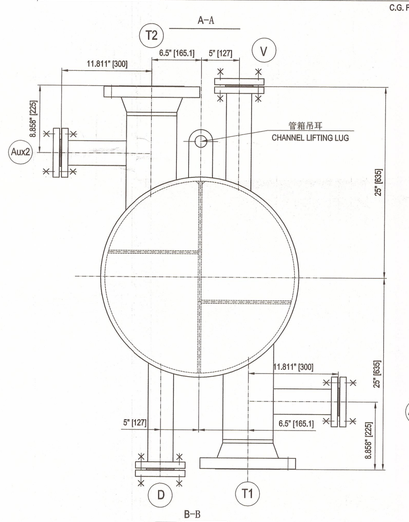

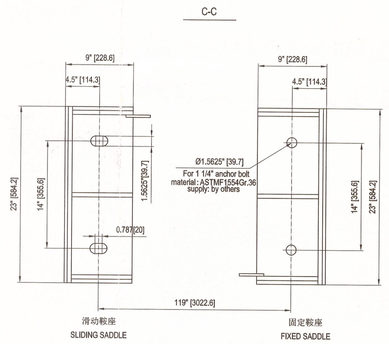

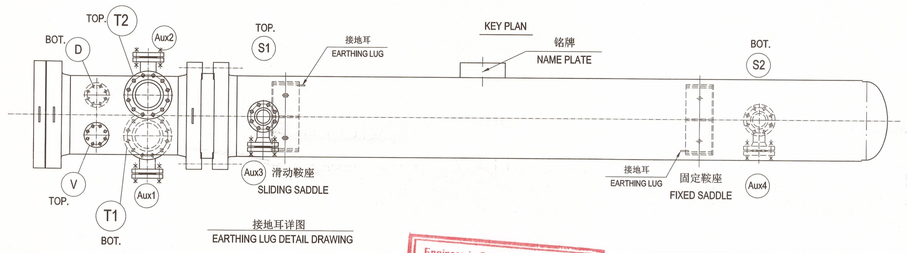

接地耳详图
EARTHING LUG DETAIL DRAWING

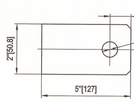

Engineer in Responsible Charge
Sign: 王文超 Date: 2023.3.27
(Name)

设 计.制 造 ,检 验与 验 收 数 据 表
DATA SHEET OF DESIGN,FABRICATION,INSPECTION & ACCEPTANCE

设 计,制 造,检 验 与 验 收 标 准
STANDARDS OF DESIGN,FABRICATION ,INSPECTION & ACCEPTANCE

1. ASME SECTION VIII DIV.1 2021 ED.
2. TEMA Tenth Edition CLASS R
3. API660-2020.

NB REGISTRATION	YES
ASME CERTIFICATE	YES (With U Designator)

	壳 程 SHELL SIDE	管 程 TUBE SIDE
工厂水压试验 psig[barg] SHOP HYDROSTATIC TEST	424.7 [29.29]	424.7 [29.29]
现场水压试验 psig[barg] FIELD HYDROSTATIC TEST	387.4 [26.72]	279.4 [18.81]
气密试验 psig[barg] PNEUMATIC TEST		
制造重量 Lb[Kg] FABRICATED WEIGHT	9690 [4405]	
空重 Lb[Kg] EMPTY WEIGHT	9690 [4405]	
安装重量 Lb[Kg] ERECTED WEIGHT	9690 [4405]	
操作重量(腐蚀) Lb[Kg] OPERATING WEIGHT(CORRODED)	13138 [5972]	
操作重量(不腐蚀)Lb[Kg] OPERATING WEIGHT(UNCORRODED)	13814 [6279]	
水压试验(现场) Lb[Kg] TEST WEIGHT(FIELD)	13327 [6058]	
水压试验(工厂) Lb[Kg] TEST WEIGHT(SHOP)	13327 [6058]	
管束重量 Lb[Kg] TUBE BUNDLE WEIGHT	4255 [1934]	
管箱重量 CHANNEL WEIGHT	1412 [640]	
平盖重量 FLAT COVER WEIGHT	722 [328]	
地震设计规范 SEISMIC DESIGN CODE	ASCE 7-2016, S1=0.579g, Ss=1.616g SDs=1.077g, SD1=0.996g, Site Class=D IMP. FACTOR=1.5, DESIGN CATEGORY=D	
风载设计规范 WIND DESIGN CODE	ASCE 7-2016	
基本风速 mph.[m/s] BASIC WIND VELOCITY	101 [45.2] EXPOSURE CATEGORY=C	
管口方位 NOZZLE ORIENTATION	按本图 AS PER THIS DWG	

设计数据
DESIGN DATA

名称 DESIGNATION	壳 程 SHELL SIDE	管 程 TUBE SIDE
换热器型式 EXCHANGER TYPE(TEMA)	AEU	
传热面积 $ft^2[m^2]$ HEAT TRANSFER SURFACE AREA	978.63 [90.92]	
DESIGN DUTY (MM Btu/hr)	2.32	
设计压力(内压/外压) psig[barg] DESIGN PRESSURE (INT/EXT)	150 [10.342]	120/15 [8.273/1.03]
工作压力(NORMAL) psig[barg] OPERATING PRESSURE	60 [4.137]	60 [4.137]
最大允许工作压力 psig[barg] MAWP(INTERNAL)	297 [19.988] (Limited by Tubesheet)	214.88 [14.461] (Limited by Flat cover)
最大允许工作压力 psig[barg] MAWP(EXTERNAL)	NA	FV@300 [148.9]
最大允许压力 psig[barg] MAP	328.2 [22.634] (Limited by Tubesheet)	328.2[22.634] (Limited by Tubesheet)
设计温度 °F[°C] DESIGN TEMPERATURE	190 [87.78]	150 [65.6]/300 [148.9] NOTE.1
工作温度 °F[°C] OPERATING TEMPERATURE	140 [60]/100 [37.78]	80 [26.67]/100 [37.78]
最低设计金属温度 °F MDMT	32 @297 PSIG	32 @ 214.88 PSIG
工作介质 OPERATING FLUID	20 wt% Caustic	Cooling Water
介质特性 VESSEL SERVICE	-	-
湿H2S工况 WET H2S SERVICE	NO	NO
氢工况 HYDROGEN SERVICE	NO	NO
介质致死工况 FLUID LETHAL SERVICE	非致死/Nonlethal	非致死/Nonlethal
介质密度 $lb/ft^3[kg/m^3]$ DENSITY OF FLUID	74.96 /75.72 [1202/1214]	62.2/61.96 [996.3/993.7]
腐蚀裕量 In.[mm] CORROSION ALLOWANCE	1/8 [3.175] NOTE.2	1/8 [3.175] NOTE.2
焊接接头系数(筒体/封头) JOINT EFFICIENCY (SHELL/HEAD)	1.0/1.0	1.0
容 积 $ft^3[m^3]$ CAPACITY	10.947 [1.05]	6.709 [0.745]
冲击试验 IMPACT TEST	NO	NO
程数 NUMBER OF PASSES	1	6
换热管与管板的连接 TUBE-TO-TUBESHEET JOINT	强度胀+密封焊 Strength Expanded+Seal Welded	
换热管间距/排列方式/数量 PITCH/PATTERN/NO.	1"/90°/182U	
换热管外径/壁厚/直段管长 TUBE O.D./WALL THK./LENGTH	0.75"/0.083"(MIN.)/168"	
焊后热处理 POST-WELD HEAT TREATMENT	需要/YES	管箱 CHANNEL
成型后热处理 POST FORMING HEAT TREATMENT	封头/ head Stress relief	U形管 Stress relief
保温类型/厚度 In.[mm] INSULATION TYPE/THK	NO	NA
防火类型/厚度 In.[mm] FIREPROOF MATERIAL/THK	NA	NA
油漆系统号 PAINT SYSTEM CODE	System 1	System 1

NOTE.1:300°F is for tube side F.V case.
NOTE.2:Tubesheet total corrosion allowance:1/4",Tube:0;

EMPTY WEIGHT (lb)	6800	2890	9690	
OPERATING WEIGHT (lb) (CORRODED)	8686	4452	13138	
OPERATING WEIGHT (lb) (UNCORRODED)	9133	4681	13814	
TEST WEIGHT	8840	4474	13327	

管口载荷表 NOZZLES LOADS LIST

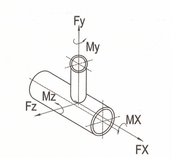

NOZZLE	NPS	FORCES (UNIT: Lbf) Fy	FX	FZ	MOMENTS (UNIT: Lbf·ft) MX	MZ	My
T1	6"(2X150#)	1600	2000	2000	3060	3880	4920
T2	6"(2X150#)	1600	2000	2000	3060	3880	4920
S1	3"(2X150#)	840	1060	1060	860	1080	1380
S2	3"(2X150#)	840	1060	1060	860	1080	1380

MAXIMUM FOUNDATION LOADING DATA(ASD)

		TOTAL EMPTY	OPERATING	SHUTDOWN
WIND LOAD	TRANSVERSE SHEAR (Lbf)	711.2	711.2	711.2
	TRANSVERSE BENDING (Lbf-in)	20625	20625	20625
	LONGITUDINAL SHEAR (Lbf)	182.5	182.5	182.5
	LONGITUDINAL BENDING(Lbf-in)	5292.5	5292.5	5292.5
EARTHQUAKE	TRANSVERSE SHEAR (Lbf)	7587	10797	-
	TRANSVERSE BENDING (Lbf-in)	220023	313113	-
	LONGITUDINAL SHEAR (Lbf)	7587	10797	-
	LONGITUDINAL BENDING (Lbf-in)	220023	313113	
Bundle pull out: @150% bundle weight		6383 lbf		

管口表 NOZZLE SCHEDULE

符号 MARK	数量 QTY.	公称尺寸 NPS	壁厚等级 SCH /THK	补强圈外径x厚度 REIN. PAD O.D.X THK.	公称压力 RATING	连接标准, 法兰型式/密封面 CONNECTING STD./ TYPE	法兰密封面到设备中心线长度 PROJECTION FROM VESSEL CL. TO FLANGE FACE	用途或名称 SERVICE	备 注 REMARKS
T1	1	6 "	SCH.80 [10.97]	O.D12.598X0.551 [O.D320X14]	CL300	ASME B16.5-2017 WN/RF	25" [635]	TS INLET	
T2	1	6 "	SCH.80 [10.97]	O.D12.598X0.551 [O.D320X14]	CL300	ASME B16.5-2017 WN/RF	25" [635]	TS OUTLET	
S1	1	3 "	0.803" [20.4]	--	CL600	ASME B16.5-2017 LWN/RF	25" [635]	SS INLET	
S2	1	3 "	0.803" [20.4]	--	CL600	ASME B16.5-2017 LWN/RF	25" [635]	SS OUTLET	
V	1	2 "	0.653" [16.6]	--	CL300	ASME B16.5-2017 LWN/RF	见图/SEE DWG	VENT	WITH BL.
D	1	2 "	0.654" [16.6]	--	CL300	ASME B16.5-2017 LWN/RF	见图/SEE DWG	DRAIN	WITH BL.
Aux1~2	2	2 "	0.654" [16.6]	--	CL300	ASME B16.5-2017 LWN/RF	见图/SEE DWG	AUXILIARY	WITH BL.
Aux3~4	2	2 "	Sch80 [5.54]	--	CL300	ASME B16.5-2017 WN/RF	见图/SEE DWG	AUXILIARY	WITH BL.

无 损 检 验 NONDESTRUCTIVE EXAMINATION

焊接接头型式或焊缝编号 JOINT TYPE OR WELD SEAM NO		焊接接头系数 JOINT EFFICIENCY	射线探伤 R.T 检测比例 EXAM. RATE	合格级别 CLASS OF ACC.	超声波探伤 U.T Appendix 12	磁粉探伤 M.T Appendix 6	着色探伤 P.T Appendix 8	备 注 REMARKS
A,B类 CATEGORY A,B	壳程 SHELL SIDE	1.0	FULL	UW-51	/	100%	/	
	管程 TUBE SIDE	1.0	FULL	UW-51	/	100%	/	
C类/CAT. C 壳程 SHELL SIDE	设备法兰与壳体 GIRTH FLANGE TO SHELL	1.0	FULL	UW-51	/	100%	/	
	接管与法兰 NOZZLE TO FLANGE	/	/	/	/	100%	/	
C类/CAT. C 管程 TUBE SIDE	设备法兰与壳体 GIRTH FLANGE TO SHELL	1.0	FULL	UW-51	/	100%	/	
	接管与法兰 NOZZLE TO FLANGE	/	/	/	/	100%	/	
D类 TYPE D		/	/	/	/	100%	/	
吊耳焊缝 LIETING LUG WELDS		/	/	/	100%	100%	/	
鞍座焊缝 SADDLES WELDS		/	/	/	/	100%	100%	
换热管与管板的连接接头 TUBE TO TUBESHEET JOINT		/	/	/	/	/	100%	

注/NOTE:
1.应在焊后热处理前对吊耳进行超声波检查，焊后热处理后应进行磁粉检测。
Lifting lugs shall be ultrasonically checked before post-weld heat treatment and magnetic particle inspection after post-weld heat treatment.
2.无损检测要求见"其他要求和说明第6条"
For requirements of NDT, see clause 6 of "Other Requirements and Notes"

扭矩表 TORQUE TABLE

部 件 PART	螺 栓 规 格 BOLT SIZE	扭 矩 (lbf-ft) TORQUE
CHANNEL FLANGE AND SHELL FLANGE TO TUBESHEET	1 1/8"	1003
CHANNEL FLANGE TO FLAT COVER	1 1/8"	1003
NOZZLE Aux1~4, TV	5/8"	90

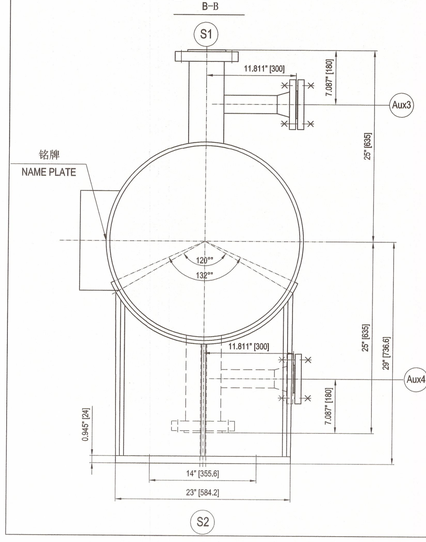

PROJECT SPECIFICATION

NO.	DOC. NO.	DESCRIPTIONS	Rev
1	A8KM-PP-000-200001-A	Plant Site Data Sheet	0B
2	A8KM-PP-000-400002-A	Structural Data for Mechanical Equipment General	0
3	A8KM-PP-000-500005-A	Design of Lifting Component for Mechanical Equipment	0
4	DELETE		
5	A8KM-PP-000-500520-A	Painting	0D
6	A8KM-PP-000-500512-A	Positive Material Identification - PMI	0
7	DELETE		
8	A8KM-PP-000-500550-A	Welding-NDE Requirements for Equipment	0C
9	A8KM-PP-000-50720-A	Shell and Tube Heat Exchangers	0
10	DELETE		
11	SPEC-MED-DOC001	Design Basis for Mechanical Equipment	0
12	4WPI-670210	Bolt-Up Procedure for Flanged Connections	5
13	Form 8232	Flanged Joint Assembly Record and Tightening Sequence	
14	SPEC-ENG-DOC001	Supplier-Designed, Shop-Fabricated Pressure Equipment	0
15	SPEC-ENG-DOC002	Shell & Tube Heat Exchanger	0
16	SPEC-ENG-MQ057	Mechanical Equipment Gaskets	1
17	4WGN-10001	Shipment and Packing Specification for Equipment and Materials being Exported Directly by Vendors	6
18	4WEQ-1051	Welding of HyCO Plant Equipment	0
19	SPEC-ENG-MQ042	Material Certification and Retesting Requirements	0

MATERIAL

CHANNEL		SKID BARS/RAILS	SA-516 Gr. 70N
FLAT COVER	SA-266 Gr. 2N	IMPINGEMENT RODS	SA-36
CHANNEL FLANGE	SA-266 Gr. 2N	SPACERS	SA-179
CHANNEL SHELL	SA-516 Gr. 70N	EXTERNAL ATTACHMENTS FOR CHANNEL	SA-516 Gr. 70N
NOZZLE NECK	SA-106 Gr.B	EXTERNAL ATTACHMENTS FOR SHELL	SA-516 Gr. 70N
NOZZLE FLANGE	SA-105N	EXTERNAL BOLTING/ NUT	SA-193 B7 / SA-194 2H
PASS PARTITION	SA-516 Gr.70N	INTERNAL BOLTING/ NUT	-
SHELL		SUPPORTS	SA-516 Gr.70N
SHELL AND SHELL COVER	SA-516 Gr. 70N	SLIDING PLATE	BY OTHERS
SHELL FLANGE	SA-266 Gr. 2N	ANCHOR BOLTS	ASTM F1554 Grades 36(By others)
NOZZLE NECK	-	GIRTH FLAGE GASKET	GMGC-316L+graphite filler
NOZZLE FLANGE	SA-105N	NOZZLE FLAGE GASKET	SPIRAL WOUND-316L+graphite filler INNER & OUTER RING:316L
TUBE BUNDLE		EARTHING LUG	SS.304
TUBES	SA-179 (Seamless)	NAMEPLATE	SS.304
TUBESHEETS	SA-266 Gr. 2N	NAMEPLATE BRACKET	SA-516 Gr. 70N
BAFFLES	SA-516 Gr.70N	COLLAR BOLTS (INTEGRAL):	-
TIE / SEAL RODS:	SA-36	JACK SCREW / DOWEL PIN	SS.304

Capave
Reviewed / 目 Witnessed
ZHAO Xuwei NB15677 AI
APAVE SA

管口详图 NOZZLE DETAIL DRAWING WXCE6721-03 1/1
管束详图 BUNDLE DETAIL DRAWING WXCE6721-02 1/1
壳体图 SHELL DETAIL DRAWING WXCE6721-01 1/1
装配图 II GENERAL ASSEMBLY DRAWING II WXCE6721-00 2/2
装配图 I GENERAL ASSEMBLY DRAWING I WXCE6721-00 1/2
运输及吊装图 SHIPPING AND LIFTING DETAIL DRAWING WXCE6721-07 1/1
试压环详图 TEST RING DETAIL DRAWING WXCE6721-06 1/1
铭牌图 NAMEPLATE DETAIL DRAWING WXCE6721-05 1/1
鞍座及吊耳详图 SADDLE AND LIFTING LUG DETAIL DRAWING WXCE6721-04 1/1
名 称 TITLE | 图 号 DWG. NO. | 张 数 SHEET NO. | 名 称 TITLE | 图 号 DWG. NO. | 张 数 SHEET NO.
图纸汇总表 DRAWING SUMMARY

AIR PRODUCTS | FLUOR | As Built

Air Products Project Number	EN207123	Fluor Project Number	A8KM
Project Name	World Energy Renew Utilities US7L	RFQ No.	A8KM-4-403
Purchase Order Number	4505600575	PO/Contract No	A8KM-4-403-PO-6
Air Products Open Text document number	EN207123-WUXI-9V3-00034	Project Area	Utilities
Client	WORLD ENERGY PARAMOUNT	Client Doc No:	

版次 REV.	版次说明/DESCRIPTION	设计/PREPARED	审核/REVIEWED	批准/APPROVED	日期/DATE
05	竣工版/AS BUILT	Hu Wenchao	Shengfang Zhao	Kevin Yang	27-Mar-23
04	供批准/ ISSUED FOR APPROVAL	Hu Wenchao	Shengfang Zhao	Kevin Yang	18-Nov-22
03	供批准/ ISSUED FOR APPROVAL	Hu Wenchao	Shengfang Zhao	Kevin Yang	13-Sep-22
02	供批准/ ISSUED FOR APPROVAL	Hu Wenchao	Shengfang Zhao	Kevin Yang	16-Aug-22

本图纸版权为无锡化工装备股份有限公司财产,未经本公司许可不得转让或复制给第三方.
The copyright of this drawing is the property of China Wuxi Chemical Equipment Co.,Ltd.(WCE),unauthorized disclosure or duplication to the third party is not permitted.

WCE 无锡化工装备股份有限公司 WUXI CHEMICAL EQUIPMENT CO., LTD.

设计项目 DESIGN ITEM	World Energy Renewables Project		
设计阶段 DESIGN PHASE	详细设计 Detail Design		
设 计 PREPARED	胡文超 2023.3.27	Caustic Dilution Cooler GENERAL ASSEMBLY DRAWING I	设备位号 ITEM NO. 18-X-1810
审 核 REVIEWED	赵士伟 2023.3.27		图 号 DWG. NO. WXCE6721-00
批 准 APPROVED	2023.3.27	比 例: SCALE 1:10	版 次: REV. 05
			第 1 页 共 2 页 PAGE 1 OF 2