ACCORDING THE LAW OUR SURVEYS AND DRAWINGS ARE OUR EXCLUSIVE PROPERTY AND MAY NEITHER BE REPRODUCED NOR COMMUNICATED TO THIRD PARTIES EVEN AFTER MODIFICATIONS WITHOUT OUR WRITTEN CONSENT

DE CONFORMIDAD CON LA LEY, NUESTROS ESTUDIOS Y DIBUJOS SON PROPIEDAD EXCLUSIVA DE NUESTRA FIRMA Y NO PUEDEN SER REPRODUCIDOS NI COMUNICADOS A TERCERAS PERSONAS SIN NUESTRA AUTORIZACION ESCRITA AUNQUE HAYAN SIDO MODIFICADOS

CONFOREMENT A LA LOI NOS ETUDES ET DESSINS SONT NOTRE PROPRIETE EXCLUSIVE ET NE PEUVENT ETRE REPRODUITS OU COMMUNIQUES A DES TIERS MEME APRES MODIFICATIONS SANS NOTRE AUTORISATION ECRITE

IF IN DOUBT, ASK – DO NOT SCALE !

DIMENSIONAL DRAWING
NOT VALID FOR ORIENTATION

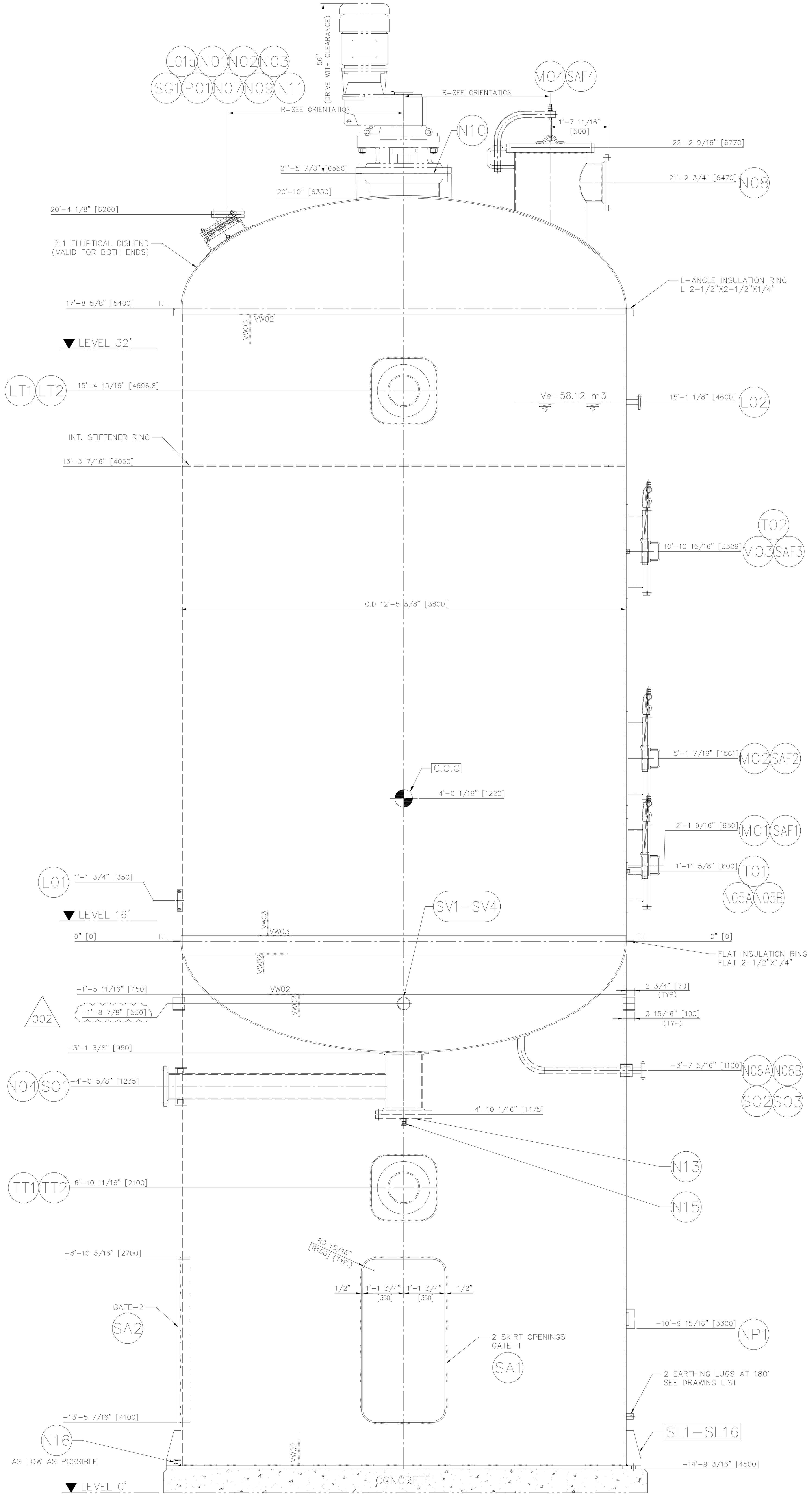

ORIENTATION

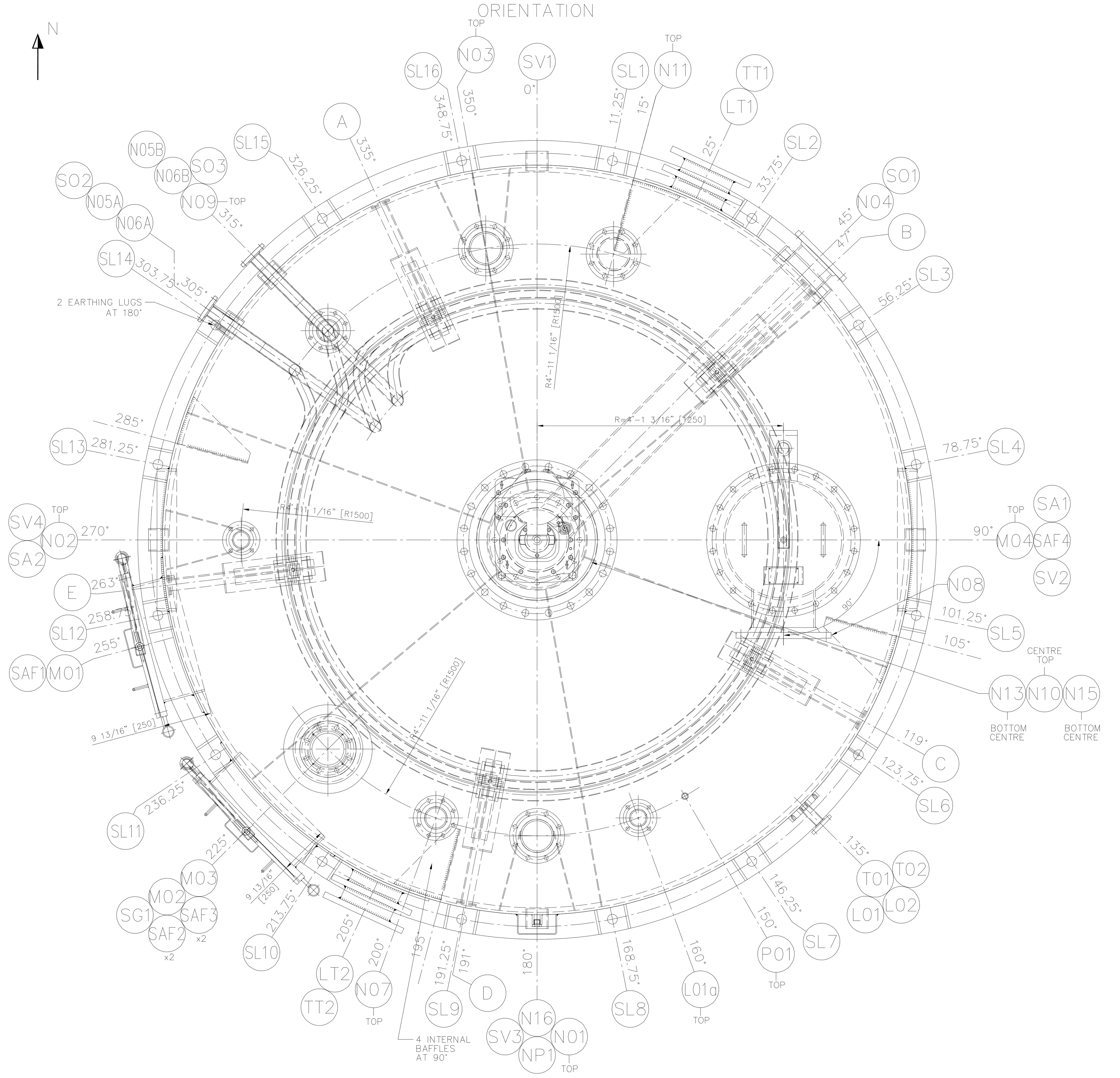

SKIRT DETAIL
POS.SL1–SL16

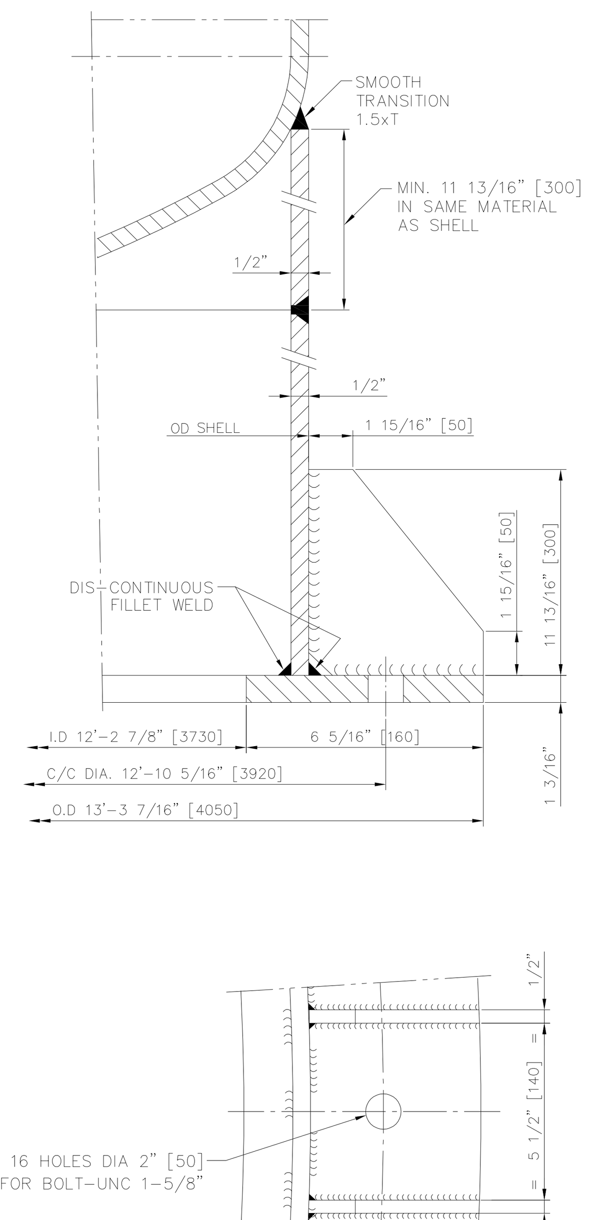

DETAIL POS. LT1–LT2–TT1–TT2
(4 OFF)

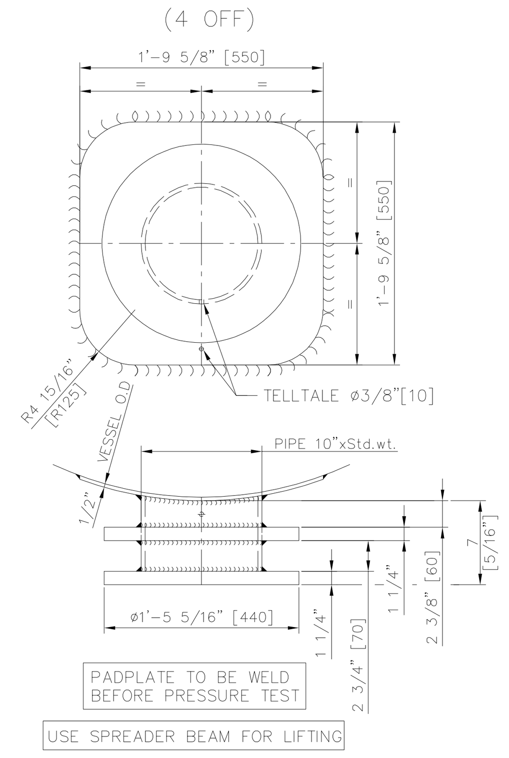

CLEAR SPACE REQUIRED FOR AGITATOR DRIVE

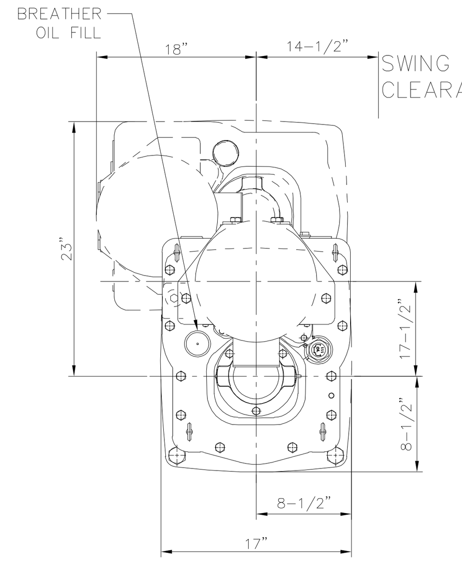

WARNING PLATE TYPE–4

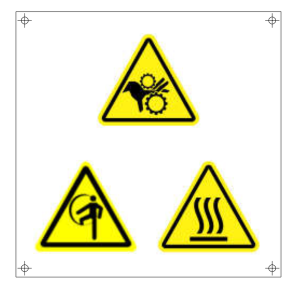

MOUNTED ON MANHOLE TOP COVER WITH SUPPORT

NOZZLES

POS.	SERVICE	QTY.	NOMINAL DIA	FLANGE RATING	FLANGE TYPE	SCHED/ THK.	REINF. PAD O.D x THK.	PROJ. LENGTH	REMARKS REF. DRG.	WELD TYPE
N01	OIL INLET FROM 621B.2	1	6"	CLASS 150	SO-RF	SCHED.40S	9 13/16"x1/2"	2' 7-1/2"		FW02/NW11
N02	OIL INLET FROM P682H	1	3"	CLASS 150	SO-RF	SCHED.40S	6 11/16"x1/2"	2' 7-1/2"		FW02/NW11
N03	INLET FROM FILTERS	1	6"	CLASS 150	SO-RF	SCHED.40S	9 13/16"x1/2"	2' 7-1/2"		FW02/NW11
N04	OIL OUTLET TO PUMP	1	8"	CLASS 150	SO-RF	SCHED.40S		6' 8-3/4"		FW02/NW01
N05A N05B	STEAM INLET TO COILS	2	2"	CLASS 300	SO-RF	SCHED.40S	5 7/8"x1/2"	6' 8-3/4"		FW02/WD14 NW13/NW11
N06A N06B	CONDENSATE OUTLET FROM COILS	2	2"	CLASS 300	SO-RF	SCHED.10S	5 7/8"x1/2"	6' 8-3/4"		FW02/WD14 NW13/NW11
N07	VAPOUR INLET FROM 682B.2	1	4"	CLASS 150	SO-RF	SCHED.40S	7 7/8"x1/2"	2' 7-1/2"		FW02/NW10
N08	VAPOUR OUTLET TO 646A.2	1	12"	CLASS 150	SO-RF	SCHED.40S				FW02/NW01
N09	SAFETY VALVE	1	4"	CLASS 150	SO-RF	SCHED.40S	7 7/8"x1/2"	2' 7-1/2"		FW02/NW10
N10	SEAT FOR AGITATOR	1	24"	CLASS 150	SO-RF	1/2"	2'- 8"x1/2"	3'- 9 1/4"		FW02/NW11
N11	SPARE + BLIND	1	6"	CLASS 150	SO-RF BF-RF	SCHED.40S	9 13/16"x1/2"	2' 7-1/2"		FW02/NW10
S02 S03	SKIRT OPENING FOR POS. N06A AND N06B	2	4"			Std. wt.		6' 4-3/4"		NW03
N13	BOTTOM BEARING + BF	1	12"	CLASS 150	SO-RF BF-RF	SCHED.40S	1'-5 11/16"x1/2"	4' 10-1/16"		FW02/NW10
S01	SKIRT OPENING FOR POS.N04	1	12"			Std.wt.		6' 4-3/4"		NW03
N15	DRAIN + PLUG	1	1" NPT	CLASS 3000	FULL COUPLING				WITH PLUG	SEE BODY
N16	DRAIN + PLUG	1	1" NPT	CLASS 3000	FULL COUPLING				WITH PLUG	
L01	SEAT FOR LEVEL TRANSMITTER (DP CELL)	1	3"	CLASS 150	PAD FLANGE					SEE BODY
L02	SEAT FOR LEVEL SWITCH (HL)	1	1 1/2"	CLASS 150	SO-RF	SCHED.40S		6' 8-3/4"		FW02/NW01
L01a	SEAT FOR LT COMPENSATION	1	3"	CLASS 150	SO-RF	SCHED.40S	6 11/16"x3/8"	2' 7-1/2"		FW02/NW10
T01– T02	SEAT FOR TEMPERATURE TRANSMITTER	2	3/4"NPT	CLASS 3000	HALF COUPLING					NW04
P01	SEAT FOR PRESSURE TRANSMITTER	1	1/2"NPT	CLASS 3000	FULL COUPLING					NW04
M01– M03	MANHOLE DIA 600 WITH VERTICAL DAVIT ARM	3	24"			1/2"	2'-7 7/8"x1/2"	6' 9-3/4"	100170267	NW11
M04	MANHOLE DIA 600 WITH PIVOT + ID-MESH	1	24"			1/2"	2'-9 7/16"x1/2"	4' 5-15/16"	100170268	NW11
SG1	SIGHTGLASS MODEL-6	1	14"			SCHED.40S	1'-6 11/16"x1/2"		00454364	NW10
SV1– SV4	SKIRT VENT	4	4"			SCHED.40S		6'-5 9/16"		NW03

ACCESSORIES

POS.	SERVICE	QTY.	NOMINAL DIA	FLANGE RATING	FLANGE TYPE	SCHED/ THK.	REINF. PAD O.D x THK.	PROJ. LENGTH	REMARKS REF. DRG.	WELD TYPE
LT1– LT2	LIFTING TRUNNIONS	2							SEE DETAIL	
TT1– TT2	TAILING TRUNNIONS	2							SEE DETAIL	
SL1– SL16	SUPPORTS	16							SEE DETAIL	
NP1	NAMEPLATE	1							100176102	
SAF1– SAF4	WARNING PLATE TYPE-4	4							00430529	
SA1– SA2	SKIRT ACCESS	2							SEE DETAIL	

MATERIALS / CERTIFICATES

ITEM		MATERIAL	CERT.	ITEM		MATERIAL	CERT.
SHELL/HEADS		SA-240 304L		LIFTING	PAD PLATE	SA-240 304L	
NOZZLE NECKS		SA-312 TP304L		TRUNNIONS	PIPE/PLATE	SA-106 B/SA-36	
NOZZLE FLANGES		SA-182 F304L		TAILING	PAD PLATE	SA-36	
MANHOLE NECK		SA-240 304L		TRUNNIONS	PIPE/PLATE	SA-106 B/SA-36	
MANHOLE FLANGES		SA-240 304L		INTERNALS		SA-240 304L	
INTERNAL COIL		SA-312 TP316L		SEAT FOR DRAIN, TT AND PT		SA-403 WP304L	
INTERNAL COIL FLANGES		SA-182 F316L		SEAT FOR LT		SA-240 304L	
SKIRT		SA-240 304L/SA-36		SUPPORT FOR NAMEPLATE/WARNING PLATE		SA-240 304L	
REINFORCING PADS		SA-240 304L		EXTERNAL BOLTS & NUTS (UNC)		SA-193 B7/SA-194 2H	
SEAT FOR	PIPE	SA-312 TP304L		INTERNAL BOLTS & NUTS (UNC)		SA-193 B8/SA-194 8	
SIGHT GLASS	PLATE	SA-240 304L		GASKET		GARLOCK 3500	
EXTERNAL STIFFENERS		SA-240 304L		SKIRT NOZZLE NECKS		SA-106 B	

DESIGN DATA

			SHELL	INTERNAL COIL
EQUIPMENT			SHELL	INTERNAL COIL
PRESSURE	OPERATING	barg	VACUUM	9 (130.53 psig)
	DESIGN	barg	FV/3.5 (50 psig)	12 (170 psig)
	TEST	barg	5.96 (86.44 psig)	21.6 (313.28 psig)
TEMPERATURE	OPERATING	°C	110 (230° F)	175.27 (347.48° F)
	DESIGN	°C	152 (305.6° F)	193.33 (380° F)
	TEST	°C	AMBIENT	AMBIENT
MIN. DESIGN METAL TEMP.		°C	-10 (14° F)	
CORROSION	STAINLESS STEEL	mm	0	0
ALLOWANCE	CARBON STEEL	mm	1.6 (1/16")	1.6 (1/16")
RADIOGRAPHY			SPOT	SPOT
MIN. JOINT EFFICIENCY			0.85	0.85
HEAT TREATMENT			NONE	
DESIGN CODE			ASME SEC. VIII DIV.1 Ed:2019	
WIND / SEISMIC DESIGN			101 mph / SDS = 1.077g, SD1 = 0.664g (ASCE 7-16)	
FLUID			VEG OIL + BLECHING EARTH	STEAM
FLUID GROUP			NA	NA
PED 2014/68/EU			NA	
ASME "U" STAMP			YES	
WEIGHT	EMPTY	kg	~20540 (45291 lbs)	
	ASSEMBLED	kg	~20540 (45291 lbs) + 910 (2006 lbs)	
	INSULATION	kg	582 (1283 lbs)	
	OPERATING	kg	71811.3 (158316.817 lbs) + 910 (2006 lbs)	
	FULL OF WATER	kg	~95222 (209928.575 lbs)+ 910 (2006 lbs)	
VOLUME		m^3	74.1 (2616.8 ft3)	0.35 (12.36 ft3)
HEAT TRANSFER AREA		m^2		28.2 (303.5 ft2)
INSULATION	SURFACE AREA / THK.	m^2/mm	97 (1044 ft2) / 50 (2")	
INSPECTED BY			ASME INSPECTOR	

002

NOTE :
OPERATING FLUID DENSITY = 872.15 Kg/m3 (54.45 lbs/ft3).

REV	DATE	DESCRIPTION OF MODIFICATION	NBR OF MOD	BY
002	04.05.2022	REVISED AS MARKED	–	HHS
001	18.08.2021	ORIENTATION UPDATED.	–	NSB

Desmet Ballestra Group

DOCUMENT TYPE	ASSY				
PROJECT DESCRIPT	WORPAR				
ITEM NBR DISPOSITION	622.2 (19-D-857)	SECD	PKK	SCALE	FORMAT
		PROC.E	GVK		A3
DOCUMENT DESCRIPTION	CONTINUOUS BLEACHER	PROJ.M	JCG		
		DOM	PRA	AUTHOR	SKP
Ve=58.12–D=3800–H=5400–S=28.2		DATE 24.04.2021	DRAWING NUMBER 100176100		REVISION 002

IF IN DOUBT, ASK DO NOT SCALE !

CAD DRWG. DO NOT MODIFY

A0(841 x 1189)