ACCORDING THE LAW OUR SURVEYS AND DRAWINGS ARE OUR EXCLUSIVE PROPERTY AND MAY NEITHER BE REPRODUCED NOR COMMUNICATED TO THIRD PARTIES EVEN AFTER MODIFICATIONS WITHOUT OUR WRITTEN CONSENT

DE CONFORMIDAD CON LA LEY, NUESTROS ESTUDIOS Y DIBUJOS SON PROPIEDAD EXCLUSIVA DE NUESTRA FIRMA Y NO PUEDEN SER REPRODUCIDOS NI COMUNICADOS A TERCERAS PERSONAS SIN NUESTRA AUTORIZACION ESCRITA AUNQUE HAYAN SIDO MODIFICADOS

CONFOREMENT A LA LOI NOS ETUDES ET DESSINS SONT NOTRE PROPRIETE EXCLUSIVE ET NE PEUVENT ETRE REPRODUITS OU COMMUNIQUES A DES TIERS MEME APRES MODIFICATIONS SANS NOTRE AUTORISATION ECRITE

IF IN DOUBT, ASK – DO NOT SCALE !

DIMENSIONAL DRAWING
NOT VALID FOR ORIENTATION

FORSEE VERTICAL FREE SPACE OF 7' IN LAYOUT FOR REMOVAL OF FILTER LEAVES.

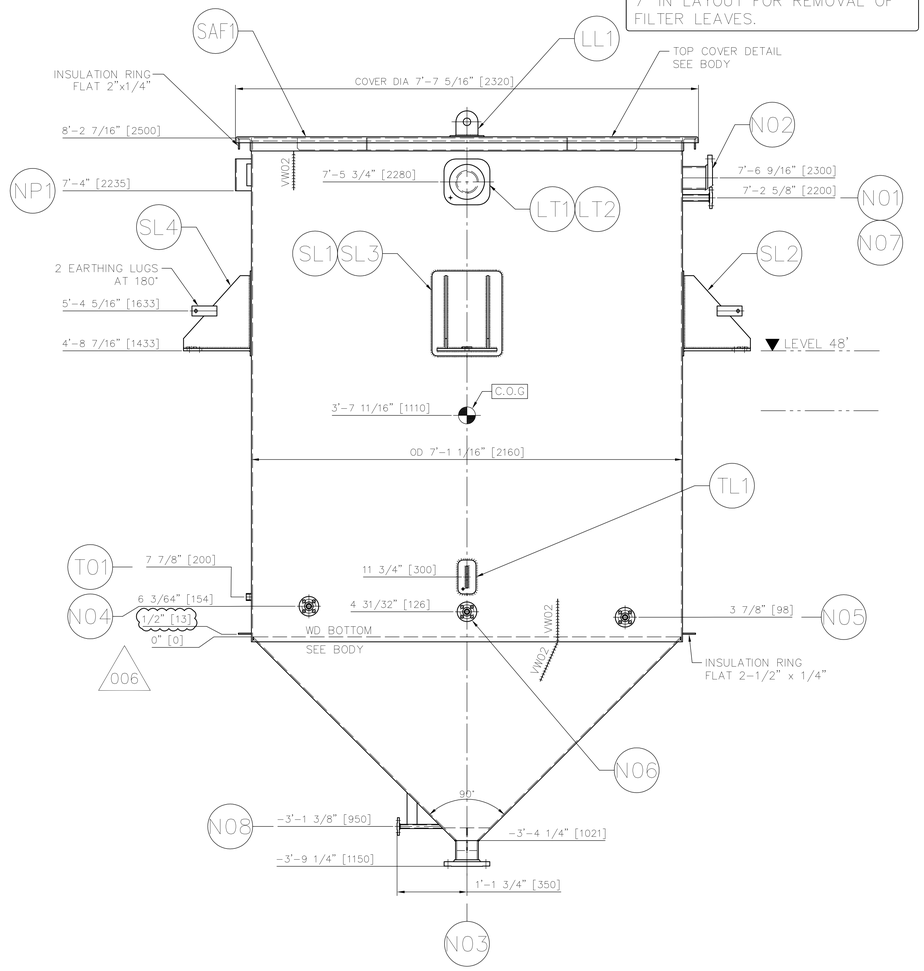

PLAN–ORIENTATION

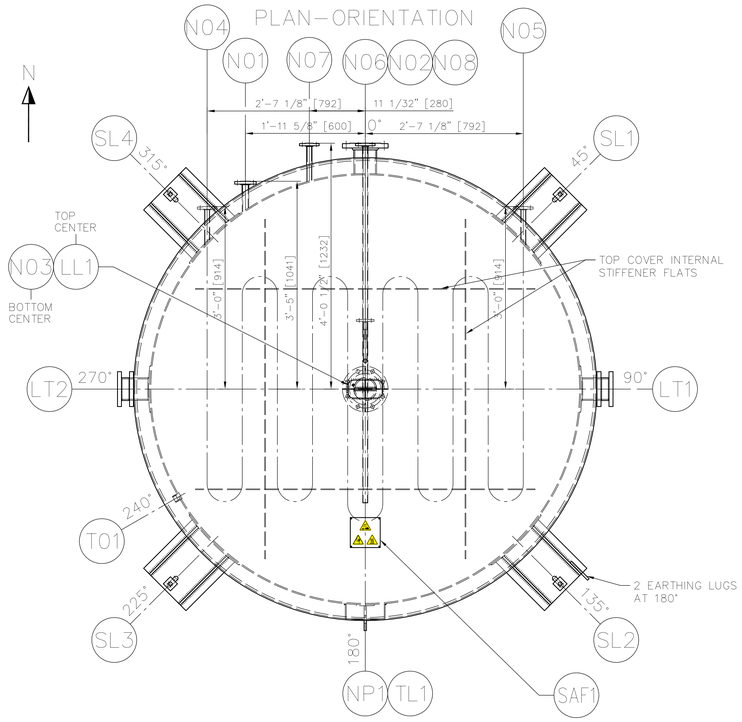

DETAIL POS.SL1–SL4

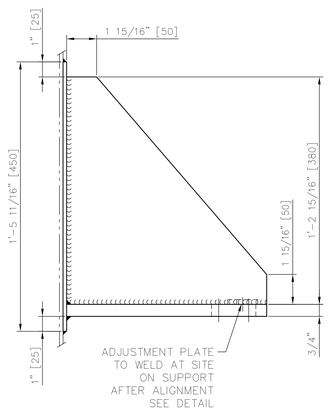

DETAIL LIFTING TRUNNIONS POS. LT1–LT2

Qty.: 2 NOs.

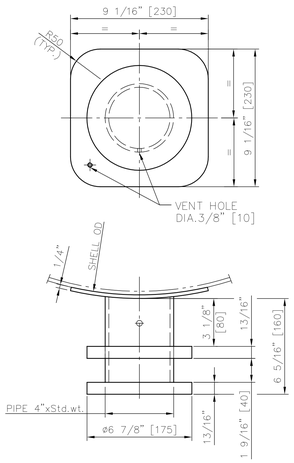

DETAIL TAILING/LIFTING LUG POS.TL1–LL1

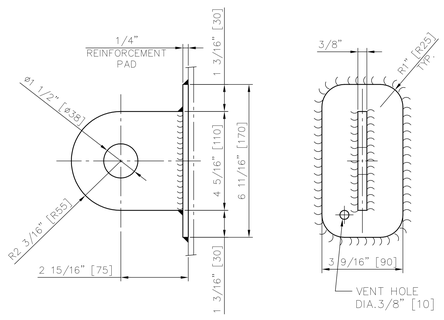

DETAIL ADJUSTMENT PLATE
(QTY.: 4 NOs.)

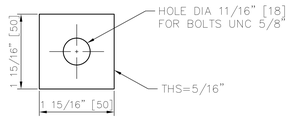

NOTE: ADJUSTMENT PLATE NEEDS TO BE WIRED TO THE SUPPORT

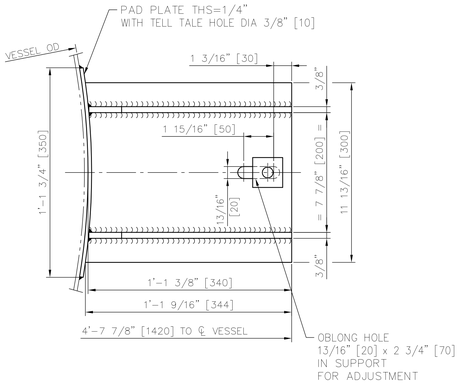

WARNING PLATE TYPE–10

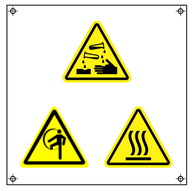

DIRECTLY RIVETED TO TOP COVER

NOZZLES

POS.	SERVICE	QTY	NOMINAL DIA	FLANGE RATING	FLANGE TYPE	SCHED/ THK.	REINF. PAD O.D x THK.	PROJ. LENGTH	REMARKS REF. DRG.	WELD TYPE
N01	CLEAN WATER INLET	1	1"	CLASS 150	SO–RF	SCH 40S		3'-5"		FW02/NW01
N02	OVERFLOW	1	4"	CLASS 150	SO–RF	SCH 40S		4'-1/2"		FW02/NW01
N03	DRAIN	1	4"	CLASS 150	SO–RF	SCH 40S		3'-9 1/4"		FW02/NW07
N04	STEAM INLET TO INTERNAL COIL	1	3/4"	CLASS 150	SO–RF	SCH 40S		3"		FW02/WD14 NW23
N05	CONDENSATE OUTLET FROM INTERNAL COIL	1	3/4"	CLASS 150	SO–RF	SCH 40S		3"		FW02/WD14 NW23
N06	COMPRESSED AIR INLET	1	3/4"	CLASS 150	SO–RF	SCH 40S		4'-1/2"		FW02/NW01
N07	CAUSTIC SODA INLET	1	1/2"	CLASS 150	SO–RF	SCH 40S		4'-1/2"		FW02/NW01
N08	DIRECT STEAM INLET	1	1/2"	CLASS 150	SO–RF	SCH 40S		1'-1 3/4"		FW02/NW03
T01	SEAT FOR TI	1	3/4"NPT	CLASS 3000	HALF COUPLING					NW04

ACCESSORIES

LT1–LT2	LIFTING TRUNNIONS	2							SEE DETAIL	
TL1	TAILING LUG	1							SEE DETAIL	
LL1	LIFTING LUG (COVER)	1							SEE DETAIL	
SL1–SL4	SUPPORTS	4							SEE DETAIL	
NP1	NAMEPLATE	1							100190362	
SAF1	WARNING PLATE TYPE–10	1							00430535	

MATERIALS / CERTIFICATES

ITEM		MATERIAL	CERT.	ITEM		MATERIAL	CERT.
SHELL/CONE/TOP COVER		SA–240 304		LIFTING	PAD PLATE	SA–240 304	
NOZZLES NECKS		SA–312 TP304		TRUNNIONS	PIPE/PLATE	SA–106 B/SA–36	
NOZZLES FLANGES		SA–182 F304		TAILING LUG	PAD PLATE	SA–240 304	
INTERNAL COIL		SA–312 TP304			PIPE/PLATE	SA–106 B/SA–36	
INTERNAL COIL FLANGES		SA–182 F304		INTERNALS		SA–240 304/SA–312 TP304	
SUPPORTS	PAD PLATE	SA–240 304		SEAT FOR TI		SA–403 WP304	
	PLATE/FLAT	SA–36		SUPPORT FOR NAMEPLATE		SA–240 304	
GASKET		GARLOCK 3500		EXTERNAL BOLTS & NUTS (UNC)		SA–193 B7/SA–194 2H	

DESIGN DATA

EQUIPMENT			SHELL	INTERNAL COIL
PRESSURE	OPERATING	barg	ATM	3 (43.5 psig)
	DESIGN	barg	ATM	4 (58 psig)
	TEST	barg	FILL WITH WATER	5.2 (75.4 psig)
TEMPERATURE	OPERATING	°C	65 (149° F)	143 (289.4° F)
	DESIGN	°C	100 (212° F)	193.33 (380° F)
	TEST	°C	AMBIENT	AMBIENT
MIN. DESIGN METAL TEMP.		°C	–10 (14° F)	
CORROSION ALLOWANCE	STAINLESS STEEL	mm	0	0
	CARBON STEEL	mm	1.6 (1/16")	1.6 (1/16")
RADIOGRAPHY			NONE	SPOT
MIN. JOINT EFFICIENCY			0.7	0.85
HEAT TREATMENT			NONE	
DESIGN CODE			ASME SEC. VIII DIV.1 Ed: 2019	
WIND / SEISMIC DESIGN			101 mph / SDS = 1.077g, SD1 = 0.664g (ASCE 7–16)	
FLUID			HOT WATER AND CAUSTIC SODA	STEAM
FLUID GROUP			NA	NA
PED 2014/68/EU			NA	
ASME "U" STAMP			NO	
WEIGHT	EMPTY	kg	1720 (3791.95 lbs)	
	ASSEMBLED	kg	1720 (3791.95 lbs)	
	INSULATION	kg	144 (317.46 lbs)	
	OPERATING	kg	13538.8 (29848 lbs)	
	FULL OF WATER	kg	12168 (26825.8 lbs)	
VOLUME		m^3	10.3 (363.74 ft3)	0.0051 (0.18 ft3)
HEAT TRANSFER AREA		m^2		1.1 (11.84 ft2)
INSULATION	SURFACE AREA / THK.	m^2/mm	24 / 50 (258.33 ft2 / 2")	
INSPECTED BY			DESMET BALLESTRA	

NOTE:
1. OPERATING FLUID DENSITY = 982 kg/m3 (61.3 lbs/ft3).
2. FILTER ELEMENTS WEIGHT ARE INCLUDED IN OPERATING WEIGHT.

REV	DATE	DESCRIPTION OF MODIFICATION	NBR OF MOD	BY
006	01.04.2022	STIFFENER POSITION UPDATED		NSB
005	03.02.2022	NOTE ADDED AND OPERATING WEIGHT UPDATED.		NSB
004	08.11.2021	POS. T01 LOCATION CHANGED.		NSB
003	23.09.2021	PLAN–ORIENTATION UPDATED		KSM
002	30.07.2021	HOLD REMOVED FROM PLAN & ELEVATION AND THICKNESS & DESIGN TEMPERATURE UPDATED AS MARKED		KSM
001	22.04.2021	POS.N06 & TL1 ORIENTATION UPDATED AS MARKED		SHN

Desmet Ballestra Group

DOCUMENT TYPE	ASSY				
PROJECT DESCRIPT	WORPAR				
ITEM NBR DISPOSITION	682X.1 (19–D–772)	SECD	PKK	SCALE	FORMAT
		PROC.E	GVK		A1
DOCUMENT DESCRIPTION	FILTER ELEMENT CLEANING TABLE	PROJ.M	JCG		
		DOM	PRA	AUTHOR	SHN
V=10.3–D=2160–H=2500–S=1		DATE	DRAWING NUMBER		REVISION
		30.03.2021	100182989		006

A1 (594 x 841)

IF IN DOUBT, ASK DO NOT SCALE !

CAD DRWG. DO NOT MODIFY