ACCORDING THE LAW OUR SURVEYS AND DRAWINGS ARE OUR EXCLUSIVE PROPERTY AND MAY NEITHER BE REPRODUCED NOR COMMUNICATED TO THIRD PARTIES EVEN AFTER MODIFICATIONS WITHOUT OUR WRITTEN CONSENT

DE CONFORMIDAD CON LA LEY, NUESTROS ESTUDIOS Y DIBUJOS SON PROPIEDAD EXCLUSIVA DE NUESTRA FIRMA Y NO PUEDEN SER REPRODUCIDOS NI COMUNICADOS A TERCERAS PERSONAS SIN NUESTRA AUTORIZACION ESCRITA AUNQUE HAYAN SIDO MODIFICADOS

CONFOREMENT A LA LOI NOS ETUDES ET DESSINS SONT NOTRE PROPRIETE EXCLUSIVE ET NE PEUVENT ETRE REPRODUITS OU COMMUNIQUES A DES TIERS MEME APRES MODIFICATIONS SANS NOTRE AUTORISATION ECRITE

IF IN DOUBT, ASK – DO NOT SCALE !

NAMEPLATE

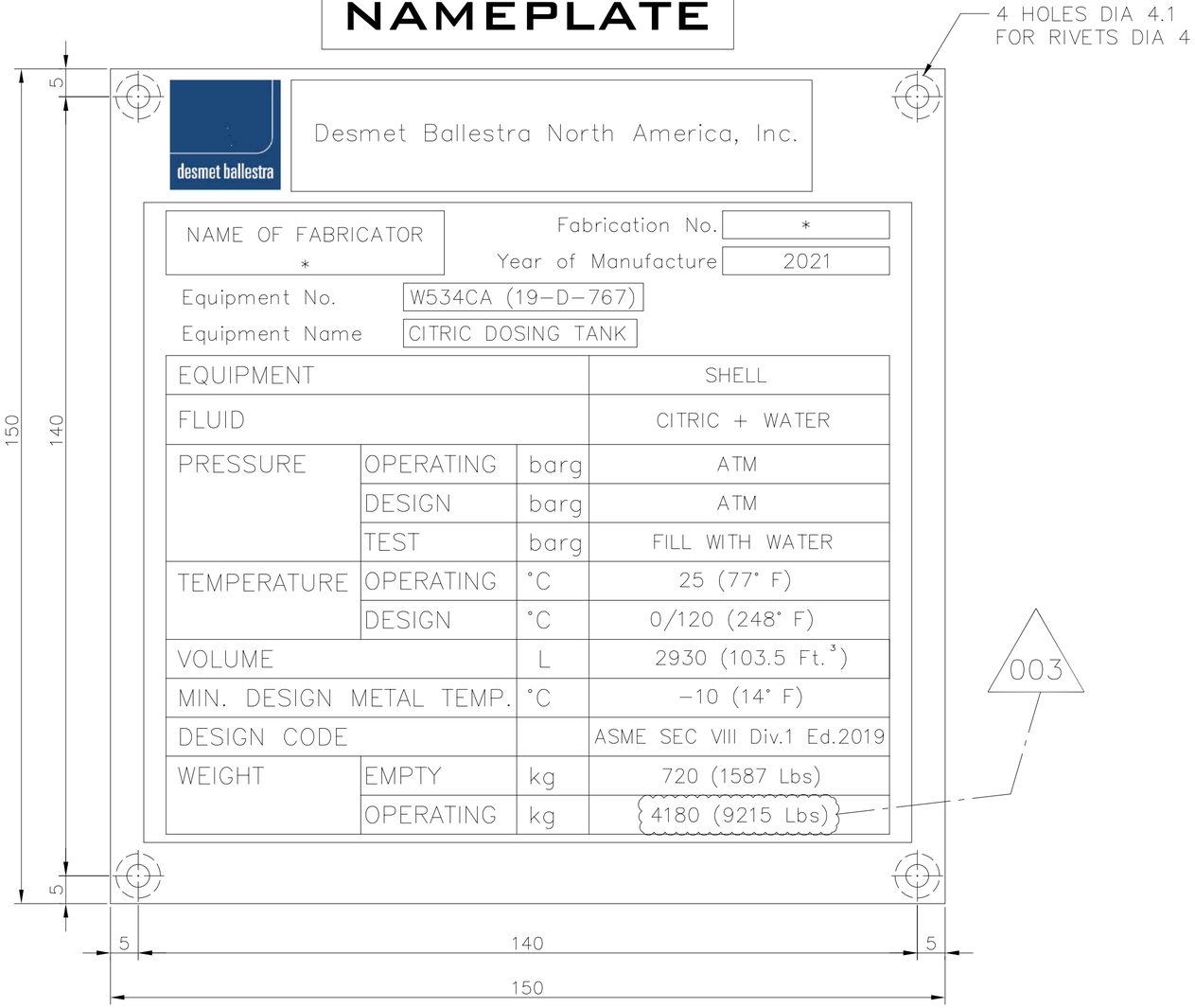

EQUIPMENT			SHELL
FLUID			CITRIC + WATER
PRESSURE	OPERATING	barg	ATM
	DESIGN	barg	ATM
	TEST	barg	FILL WITH WATER
TEMPERATURE	OPERATING	°C	25 (77° F)
	DESIGN	°C	0/120 (248° F)
VOLUME		L	2930 (103.5 Ft.^{3})
MIN. DESIGN METAL TEMP.		°C	–10 (14° F)
DESIGN CODE			ASME SEC VIII Div.1 Ed.2019
WEIGHT	EMPTY	kg	720 (1587 Lbs)
	OPERATING	kg	4180 (9215 Lbs)

SUPPORT

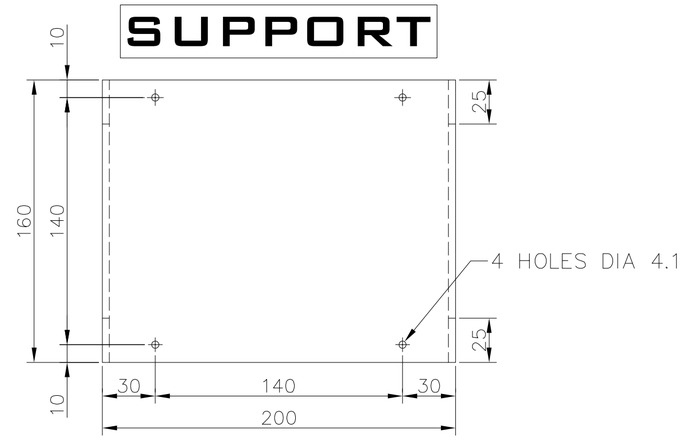

FOR SUPPORT MATERIAL: SEE ASSY DRAWING
MINIMUM THICKNESS: 4 mm–SS
5 mm–CS

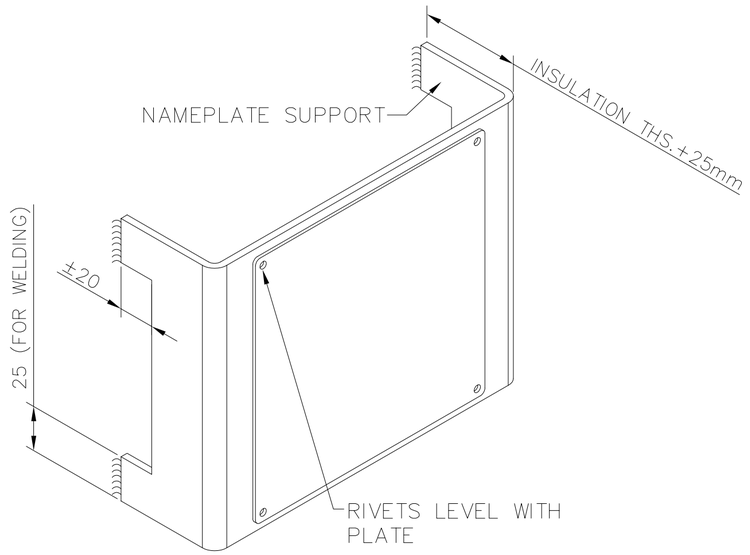

NOTES:

- CONSTRUCTION PRINTED.
- DIMENSIONS AS INDICATED, MINIMUM THICKNESS OF NAMEPLATE 1 mm.
- THE RECTANGLES, WRITINGS & EDGES HAVE TO BE WRITTEN IN BLACK.
- RECTANGLES & DASHED LINES DELIMIT THE MAXIMUM SPACE TO BE USED FOR THE INDICATED WRITINGS.
- RIVETS OR BOLTS : STAINLESS STEEL WITH COUNTERSUNK HEAD.
- MATERIAL NAMEPLATE : ALUMINIUM.
- LETTERING SIZE = 2.5 mm (EXCEPT HEADINGS).
- HEADINGS SIZE = 3 mm.
- * INFORMATION GIVEN BY VESSEL FABRICATOR.

REV	DATE	DESCRIPTION OF MODIFICATION	NBR OF MOD	BY
003	14.12.2021	UPDATED AS MARKED		RSS

Desmet Ballestra Group		DOCUMENT TYPE	ASSY
		PROJECT DESCRIPT	WORPAR
ITEM NBR DISPOSITION	W534CA (19–D–767)	SECD / PROC.E / PROJ.M	SAA / GVK / JCG
DOCUMENT DESCRIPTION	CITRIC DOSING TANK	DOM	PRA
NAMEPLATE		SCALE	
		FORMAT	A3
		AUTHOR	RSS
		DATE	15.04.2021
		DRAWING NUMBER	100174059
		REVISION	003

A3 (297 x 420)

IF IN DOUBT, ASK DO NOT SCALE !

CAD DRWG. DO NOT MODIFY