THIS DRAWING MUST NOT WITHOUT OUR CONSENT BE SHOWN TO ANY PERSON OUTSIDE THE RECIPIENT EMPLOY OR BE COPIED OR USED FOR THE PURPOSE OF MANUFACTURING ANY ARTICLE SHOWN IN THE DRAWING AND THE COPYRIGHT IN THE DRAWING SHALL BE AND REMAIN OUR SOLE PROPERTY. THIS DRAWING TOGETHER WITH ANY COPIES MADE BY THE RECIPIENT SHALL BE RETURNED ON DEMAND TO US.

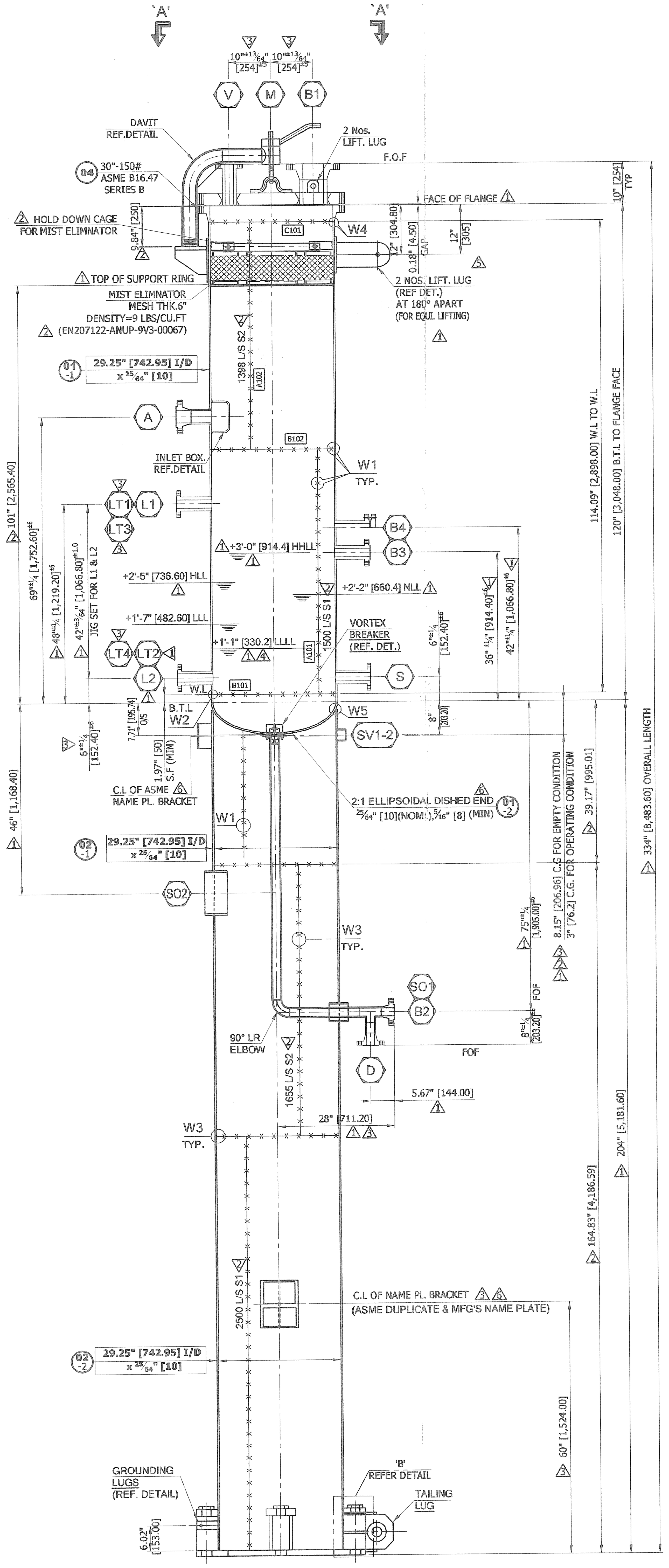

SECTIONAL ELEVATION (LOCATIONAL)

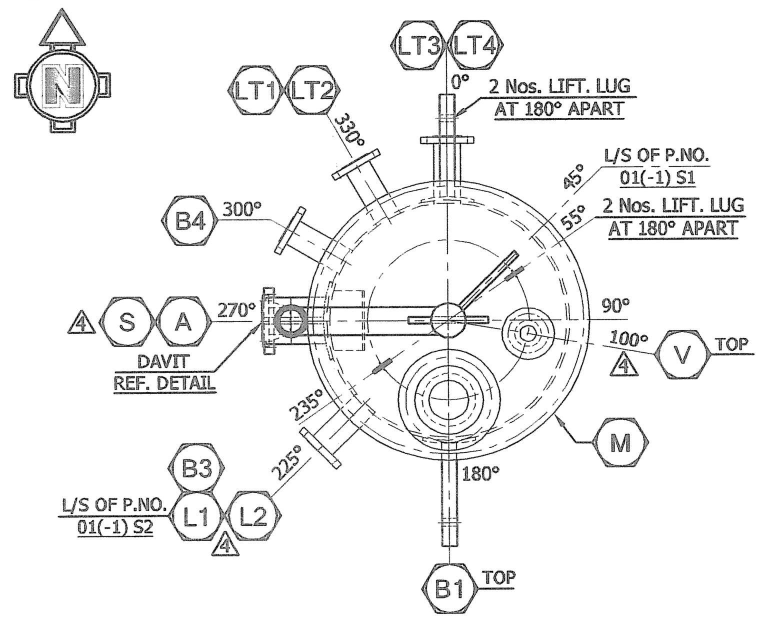

ORIENTATION PLAN VIEW -'A-A' (FOR MAIN SHELL & TOP HEAD)

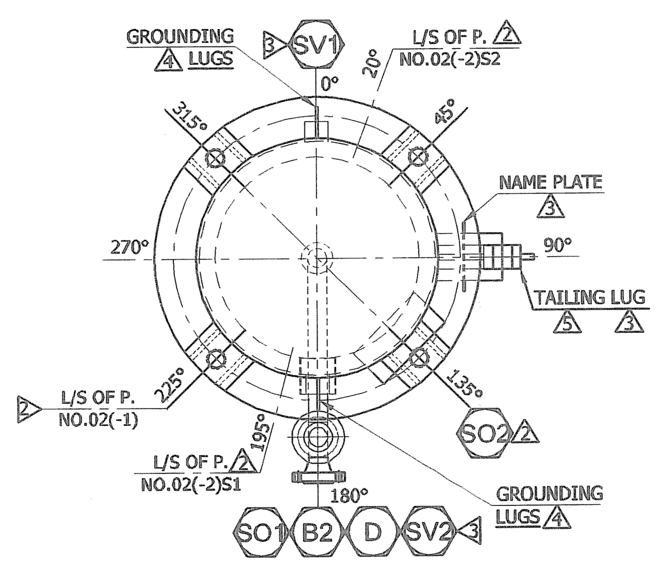

ORIENTATION PLAN VIEW -'A-A' (FOR SKIRT SHELL & BTM. HEAD)

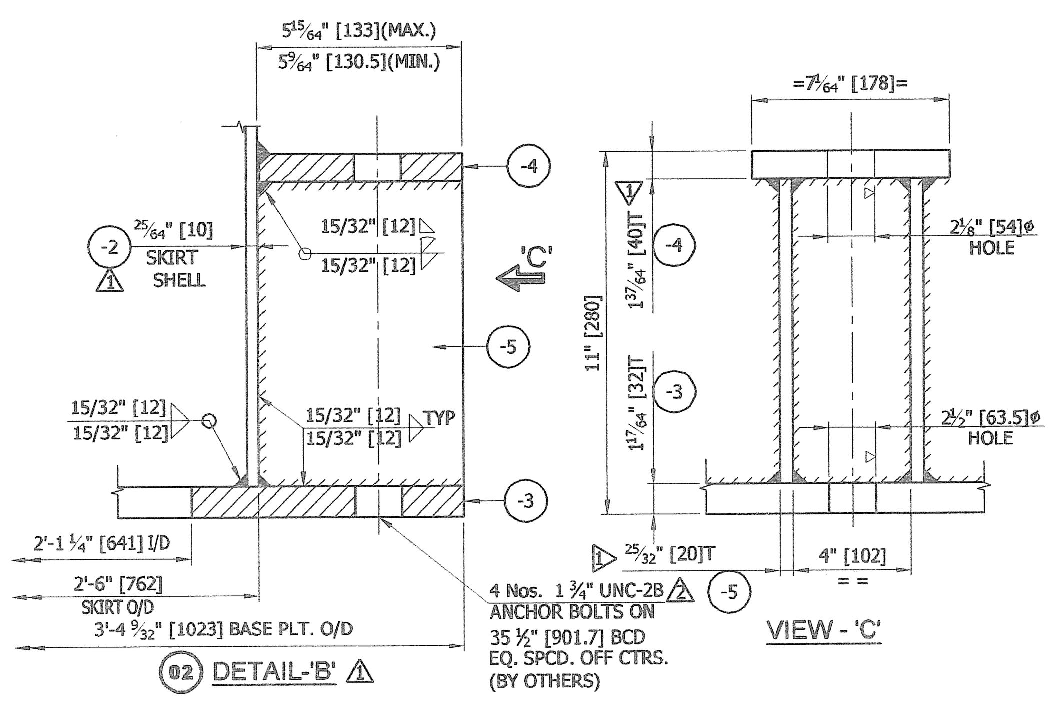

(02) DETAIL-'B'

VIEW - 'C'

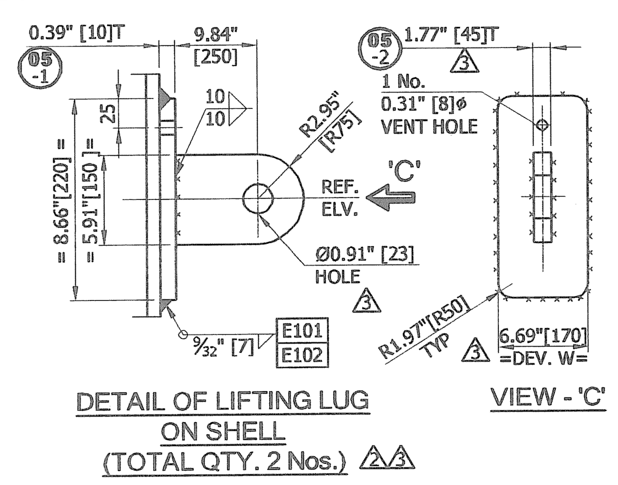

DETAIL OF LIFTING LUG ON SHELL (TOTAL QTY. 2 Nos.)

VIEW - 'C'

SHACKLE : G2130/S2130 NOM. SIZE 5/8"

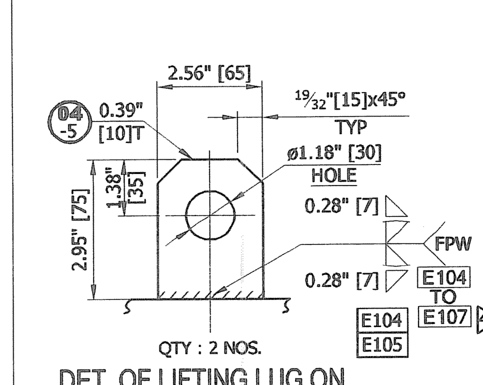

DET. OF LIFTING LUG ON BLIND FLANGE

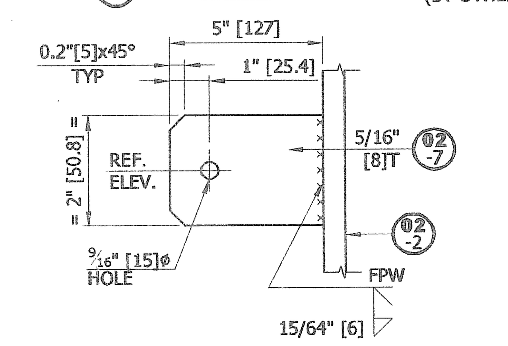

DETAIL OF GROUNDING LUG

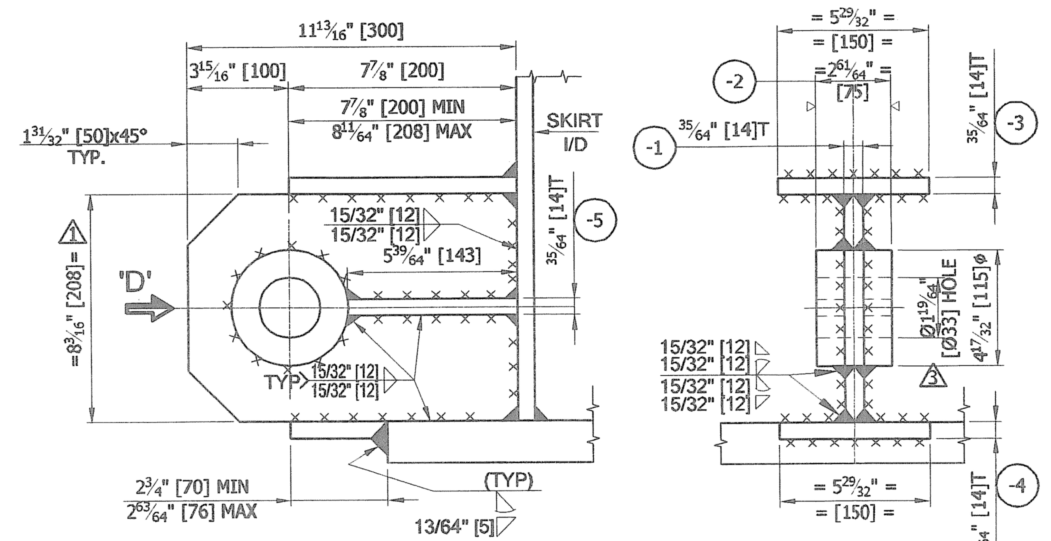

(03) DETAIL OF TAILING LUG

VIEW-`D'

SHACKLE : G2130/S2130 NOM. SIZE 1"

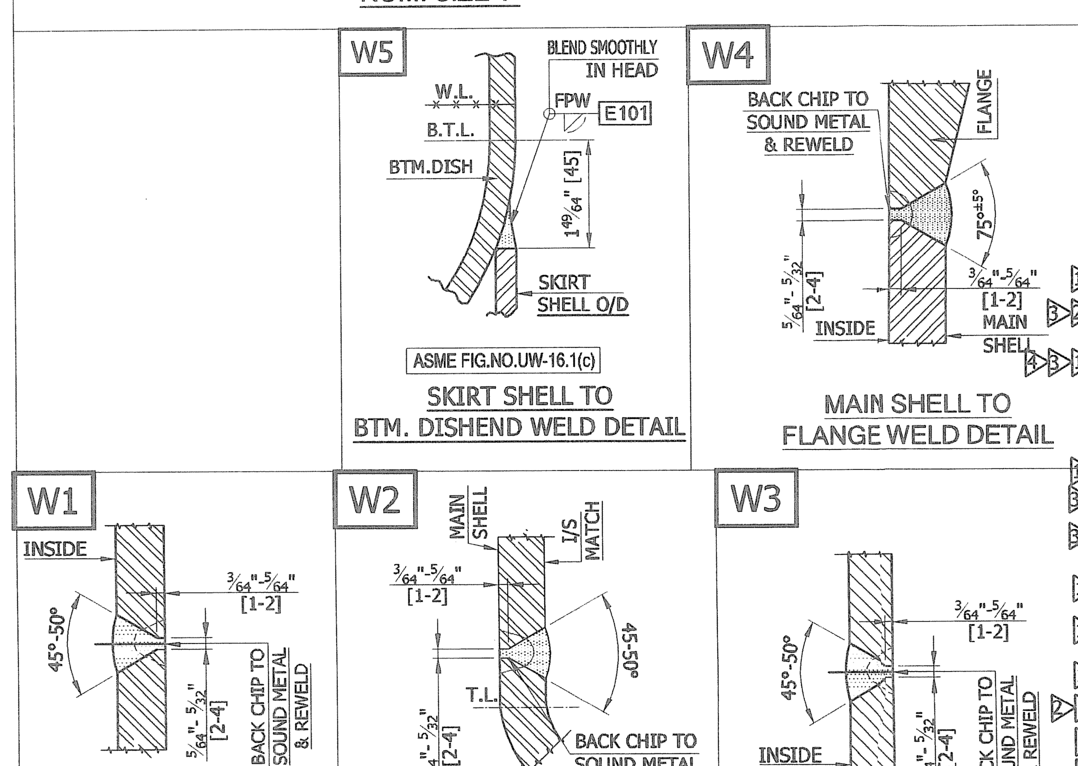

SKIRT SHELL TO BTM. DISHEND WELD DETAIL

MAIN SHELL TO FLANGE WELD DETAIL

L/S & C/S WELD DETAIL FOR MAIN SHELL & L/S WELD DETAIL FOR SKIRT SHELL

MAIN SHELL TO BTM.DISH END WELD DETAIL

L/S & C/S WELD DETAIL FOR SKIRT SHELL

DESIGN DATA

1	CONSTRUCTION CODE		ASME SECTION VIII DIV.1, EDITION 2019
	ASME 'U' STAMP REQUIREMENT		YES
	NATIONAL BOARD REGISTRATION		YES
	HYDROGEN SERVICE		NO
	CYCLIC SERVICE		NO
	SOUR SERVICE		YES
2	FLUID CIRCULATED / SERVICE		H2S
3	MAWP / MAEWP	Psig [kg/cm²]	150 [10.5461] (LIMITED BY NOZZ. M BLD. / FLG.) / 15
4	MAP (GOVERNING COMPONENT)	Psig [kg/cm²]	230 [16.1706] (LIMITED BY NOZZ. M BLD. / FLG.)
5	DESIGN PRESSURE (INT./EXT.)	Psig [kg/cm²]	105 [7.382] / FV
6	DESIGN TEMPERATURE (INT./EXT.)	°F (°C)	500 (260) / 300 (149)
7	OPERATING PRESSURE	Psig [kg/cm²]	10 [0.703]
8	OPERATING TEMPERATURE	°F (°C)	105 (40.5)
9	MDMT @ MAWP	°F (°C)	32 (0.0)
10	LOWEST ALLOWABLE MDMT @ MAWP	°F (°C)	32 (0.0)
11	SHOP HYDRO TEST PRESSURE BASED ON MAP CALCULATED UG-99(c) (HORIZONTAL)	Psig [kg/cm²]	312.913[22]
12	SITE HYDRO TEST PRESSURE BASED ON UG-99(b)	Psig [kg/cm²]	220.034[15.469]
13	CORROSION ALLOWANCE (VESSEL) (INTERNAL)	in (mm)	1/32"(0.8)
14	RADIOGRAPHY (SHELL / DISH)		100%/100%
15	WELD JOINT EFFICIENCY (SHELL/DISH)		1.0 / 1.0
16	POST WELD HEAT TREATMENT		EXEMPTED AS PER UHA-32
17	POST FORMING HEAT TREATMENT		EXEMPTED AS PER UHA-44
18	IMPACT TEST REQUIREMENT		N.A
19	INSULATION (TYPE / THK.)	in (mm)	NONE
20	FIRE PROOFING THK. (ON SKIRT)	in (mm)	NONE
21	WIND DESIGN AS PER		ASCE 7-16 EXP CATEGORY C RISK CATEGORY III KZT = 1
22	BASIC WIND SPEED	mph	101
23	SEISMIC DESIGN AS PER		ASCE 7-16 IMPORTANCE FACTOR, I=1.25 SITE CLASS D, SS=1.616, S1=0.859,Fa = 1.0Fv = 1.721,Sds = 1.077,Sd1 = 0.996, R = 3
24	CAPACITY	in³	83836
25	FLUID GRAVITY (LIQUID)		0.99 @ 105°F
26	PAINTING / CLEANING		AS PER A8KM-PP-000-500520-A
27	INSPECTION BY		ANUP / AP / AI
28	WEIGHT	EMPTY WEIGHT ~lb[kg]	~5976 [2711]
		OPERATING WEIGHT~lb[kg]	~11331 [5140]
		HYDRO TEST WEIGHT AT SHOP ~lb[kg]	~9032 [4097]

MATERIAL OF CONSTRUCTION

SHELL / DISH END	SA 240 GR 316L
SKIRT	SA 240 GR 316L / SA 516 GR 70
BASE PLATE & CHAIRS	SA 516 GR 70
NOZZLE NECKS & PIPE	SA 240 GR 316L/ SA 312 GR 316L
FLANGES (EXTERNAL)	SA 182 F 316L
FITTINGES	SA 403 WP 316L
BOLTS (EXTERNAL)	SA 193 GR B7M / SA 194 GR 2HM
INTERNALS (FIXED)	SS 316L
ANCHOR BOLTS	ASTM F1554 GR 36 (BY OTHER)

$ 4.5T SS 316 SPWD GASKET WITH GRAPHITE FILLER AND 3.2T SS 316 INNER & SS OUTER RING. (DIMENSIONS AS PER ASME B 16.20)

WET H2S

FOUNDATION LOAD (AT BASE) - ASD CASE

CONDITION	OPERATING	EMPTY
WIND SHEAR (lbf)	2548	1529
SESIMIC SHEAR (lbf)	5085	3559
WIND MOMENT (ft-lb)	44691	26814
SESIMIC MOMENT (ft-lb)	102252	71577

NOZZLE LOADING DATA

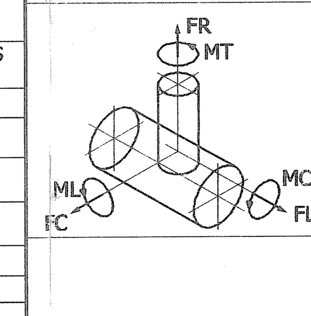

NOZZLE MARK	SIZE NPS(DN)	F_R (lbf)	F_C (lbf)	F_L (lbf)	M_C (lbf-ft)	M_L (lbf-ft)	M_T (lbf-ft)
**B1	6"(150)	1600	1200	1600	1600	2100	2400
*B2,B3,B4,S,L1,L2,D	2"(50)	630	470	630	210	270	310
**A	3"(80)	810	610	810	400	520	600

FOR HEAD NOZZLE MRESULTANT: √(ML2+MC2) AND FRESULTANT: √(FL2+FC2)
* NOZZLE LOADS ARE AS PER TABLE 5, A8KM-PP-000-50801-A FOR 300 CLASS FLANGE RATING
** NOZZLE LOADS ARE AS PER TABLE 5, A8KM-PP-000-50801-A FOR 150 CLASS FLANGE RATING

BILL OF MATERIAL

2 ## 11/64"[4.5]T SS 316 SPWD GASKET WITH GRAPHITE FILLER AND 1/8" [3.2]T SS 316 INNER & SS OUTER RING. (DIMENSIONS AS PER ASME B 16.20)

2 WELD JOINT NO.: A101, A102,C101, B101, B102, E101 TO E105

REV. NO.	SR. NO.	DESCRIPTION	QTY./ ITEM	MATERIAL	SIZE	WT. (kg)	REMARK
3					SUB TOTAL OF WEIGHT (Kg)	2260	
3	-2	LIFTING LUG	2	SA 516 GR 70	45T x 150W x 325 LG (REF. DETAIL)	34.4	
3	-1	LIFTING LUG PAD	2	SA 240 GR 316L	10T x 170 DEV.W x 220 LG	5.9	
3	05	**LIFTING LUG ASSLY**					
2	-5	LIFTING LUG	2	SA 240 GR 316L	10T x 65W x 75 LG	0	
2	-4	STUD WITH 2 NUT	44+5	SA 193 GR B7M/SA 194 GR 2HM	3/4" UNC x 185 LG (FULL THRD)	25	
2	-3	GASKET	1+2	##	NPS 30" ASME 150 CL ASME B 16.20	-	
1	-2	BLIND FLANGE	1	SA 182 F 316L	NPS 30" ASME 150 CL BL RF (tf=70)	340	ASME B16.47 SERIES-B
	-1	FLANGE	1	SA 182 F 316L	NPS 30 x BORE Ø742.95 x ASME 150 CL WN RF	80	ASME B16.47 SERIES-B
	04	**CONN. M ASSLY**					
1	-5	RIB PLATE	2	SA 516 GR 70	14T x 30.5W x 143 L	0.96	
1	-4	BTM. SUPPORT PLATE	1	SA 516 GR 70	14T x 150W x 76 L	1.25	
1	-3	TOP SUPPORT PLATE	1	SA 516 GR 70	14T x 150W x 208 L (REF. DETAIL)	3.43	
	-2	BOSS	1	SA 516 GR 70	ø115 x 75 (FINISH SIZE)	6	
1	-1	PLATE FOR TAILING LUG	1	SA 516 GR 70	14T x 208W x 300 L	7	
3	03	**TAILING LUG ASSLY**					
2	-7	EARTHING LUG	2	SS 304	8T x 50.8W x 127 LG	0.62	
3	-6	DELETED					
1	-5	SUPPORT RIB	8	SA 516 GR 70	20T x 132 W x 208 LG	35	
1	-4	TOP PLATE	4	SA 516 GR 70	40T x 133W x 178 LG	30	
	-3	BASE PLATE RING	1	SA 516 GR 70	32T x 1023 O/D x 641 I/D	126	
2	-2	BTM SKIRT SHELL	1	SA 516 GR 70	10T x 4155W x 2366 DEV. LG.	771	
2	-1	TOP SKIRT SHELL	1	SA 240 GR 316L	10T x 950W x 2366 DEV. LG.	180	
	02	**SKIRT SHELL ASSLY**					
	-2	BTM DISHED END	1	SA 240 GR 316L	10T(NOM.) x 985 B.DIA	62	
	-1	MAIN SHELL	1	SA 240 GR 316L	10T x 2898W x 2366 DEV.L	551	
	01	**MAIN SHELL ASSLY**					

NOZZLES AND CONNECTIONS

MARK	QTY.	SIZE NPS(DN)	PIPE SCH.	PIPE THK.	CLASS	TYPE	FACE	SERVICE	PROJ. FROM CL.	RF PAD T x OD	REMARK
SV1-SV2	2	2.5"(65)	40	0.2" [5.16]	-	-	-	SKIRT VENT	-	-	-
SO2	1	10"(250)	40	0.36" [9.27]	-	-	-	SKIRT INSPECTION OPENING	-	-	-
SO1	1	4"(100)	40	0.24"[6.02]	-	-	-	SKIRT OPENINING FOR NOZZLE 'B2'	-	-	-
				DELETED						-	-
LT1,LT2, LT3,LT4	4	50.8 I/D (2" I/D)	-	0.66" [16.67]	300	LWN	RF	LEVEL TRANSMITTER (18-LT-D272A/B) (LL LEVEL TRIP)	1'-11" [585]	-	-
L1/L2	2	50.8 I/D (2" I/D)	-	0.66" [16.67]	600	LWN	RF	LEVEL GAUGE (18-LI-D272C)	1'-11" [585]	-	-
M	1	30(750)	-	0.39" [10]	150	WN	RF	MAN WAY W/ BLIND & DAVIT	SEE DRG.		ASMEB16.7 SERIES-B
S	1	50.8 I/D (2" I/D)	-	0.66" [16.67]	600	LWN	RF	STEAM OUT	1'-11" [585]		
D	1	2(50)	80S	0.22"[5.54]	600	WN	RF	DRAIN	SEE DRG.	-	-
V	1	50.8 I/D (2" I/D)	-	0.66" [16.67]	300	LWN	RF	VENT	SEE DRG.	-	-
				DELETED						-	
B4	1	50.8 I/D (2" I/D)	-	0.66" [16.67]	600	LWN	RF	FUTURE PUMP MINIMUM FLOW W/ BLIND	1'-11" [585]	-	BLIND
B3	1	50.8 I/D (2" I/D)	-	0.66" [16.67]	600	LWN	RF	SPARE NOZZLE	1'-11" [585]	-	
B2	1	2(50)	80S	0.22"[5.54]	600	WN	RF	LIQUID OUTLET	SEE DRG.	-	VORTEX BREAKER
B1	1	6(150)	XXS	0.86"[21.95]	300	WN	RF	VAPOR OUTLET	SEE DRG.	-	
A	1	3(80)	XXS	0.6"[15.24]	600	WN	RF	FEED INLET	1'-11"[585]	DELETED	INLET BOX

CLASS / TYPE / FACE: ASME B16.5,B16.47-B FLANGE

AS BUILT DRAWING

THE ANUP ENGG. LTD. — Date & Signature, SATISHSINGH RAJPUT, Quality Department, 02/02/23

TPI — Noted, 02/02/2023 (BUREAU VERITAS (INDIA) PVT. LIMITED, SURVEYOR, AHMEDABAD)

REFERENCE DRAWING

AP DOC. NO.	DRG.NO.	SHT.No.	DESCRIPTION	REV.
EN207122-ANUP-9V3-00046	V-1264-TRANS-2021	1 OF 1	TRANSPORTATION DRAWING	1
EN207122-ANUP-9V3-00020	V-1264-FAD-2021	1 OF 1	EXTERNAL ATTACHMENT DRAWING	2
EN207122-ANUP-9V3-00073	V-1264-FAD-2021	4 OF 4	SKIRT TEMPLATE DRAWING	2
EN207122-ANUP-9V3-00028	V-1264-FAD-2021	3 OF 4	NAME PLATE AND GENERAL NOTES DETAILS DRAWING	4
EN207122-ANUP-9V3-00068	V-1264-FAD-2021	2 OF 4	DETAIL FABRICATION DRAWINGS	4

REVISIONS

REV. NO.	DATE	DESCRIPTION	BY	CHD.	APPD.
6	23-01-2023	AS BUILT DRAWING	GML	AAS	BMP
5	30-11-2022	DRAWING REVISED AS MARKED	SBL	AAS	BMP
4	17-09-2022	DRAWING REVISED AS PER CLIENT COMMENT AS MARK.	VAP	AAS	BMP
3	20-04-2022	DRAWING REVISED AS PER CLIENT COMMENT AS MARK.	VAP	KRK	BMP
2	01-01-2022	DRAWING REVISED AS PER CLIENT COMMENT AS MARK.	VAP	KRK	BMP
1	14-10-2021	DRAWING REVISED AS PER CLIENT COMMENT AS MARK.	VAP	KRK	BMP
0	29-07-2021	ISSUED FOR APPROVAL	VAP	-	BMP

EQUIPMENT OWNER

Air Products Manufacturing LLC

ENGINEERING & PROJECT MANAGEMENT

AIR PRODUCTS

CONTRACT NO :

THE ANUP ENGINEERING LTD.
AHMEDABAD

CLIENT:- WORLD ENERGY PARAMOUNT PARAMOUNT, CA | SHEET NO: 1 OF 4 | REV: 6

P.O.NO. : 4505426369 DATE 09.07.2021 | DRG. NO: V-1264-FAD-2021

DRN.	VAP	18-D-272 ARG2 AMINE REGEN REFLUX DRUM H2S RECOVERY UNIT	ITEM NO. 18-D-272
CHD.	KHK		
APPD.	BMP		
DATE	29-07-2021	GENERAL ARRANGEMENT DRAWING	QTY ONE
SCALE	1 : 19		

MFR'S SERIAL No.: V-1264 | AP DOCUMENT NUMBER EN207122-ANUP-9V3-00007 | SHEET NO. 1 OF 4 | REV. 6 | A1

MFR'S SERIAL NO. : V-1264

ORIGINAL FRAME SIZE 841 x 594 mm

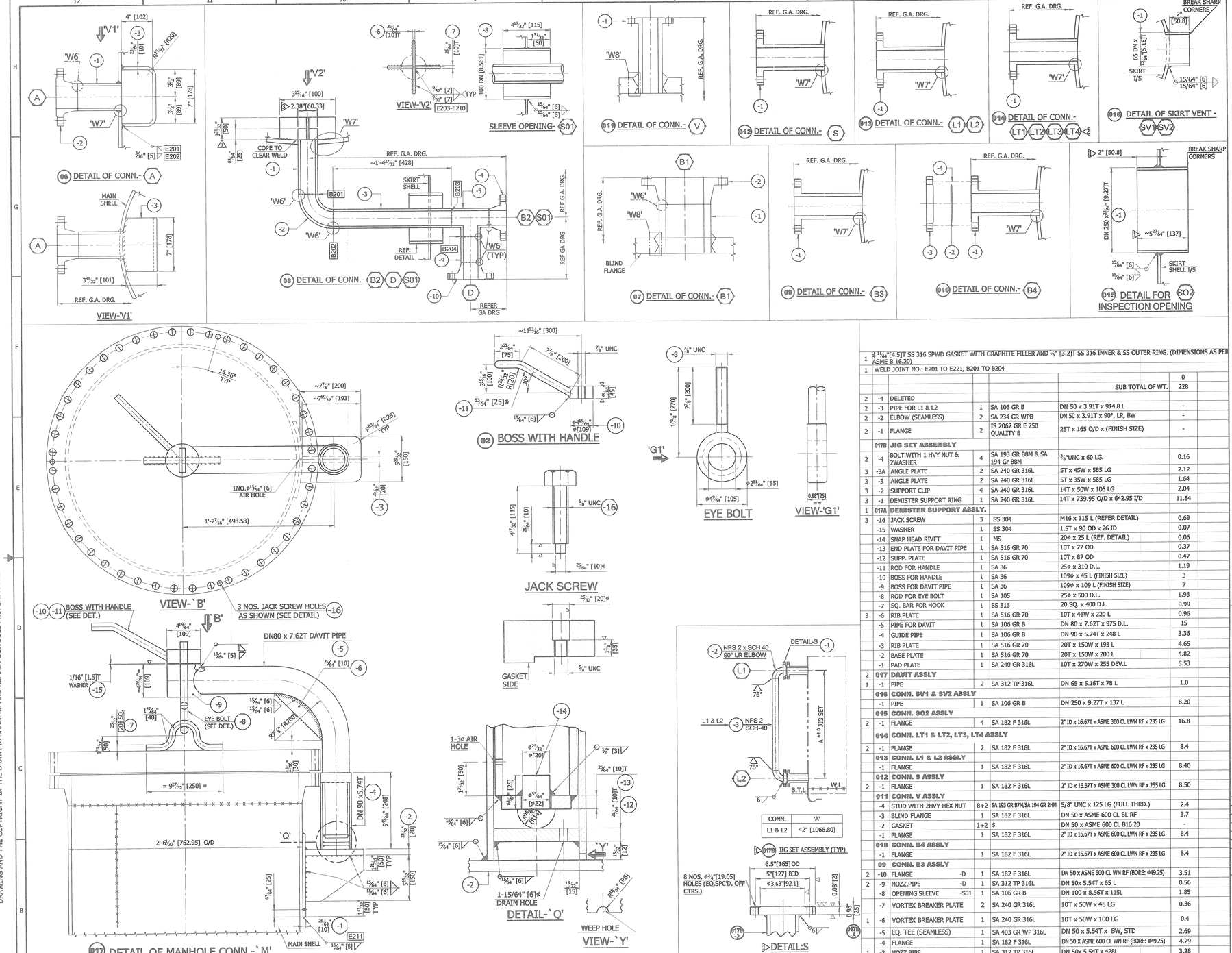

1		5/8"[4.5]T SS 316 SPWD GASKET WITH GRAPHITE FILLER AND 1/8" [3.2]T SS 316 INNER & SS OUTER RING. (DIMENSIONS AS PER ASME B 16.20)				
1		WELD JOINT NO.: E201 TO E221, B201 TO B204				
					0	
				SUB TOTAL OF WT.	228	
2	-4	DELETED				
2	-3	PIPE FOR L1 & L2	1	SA 106 GR B	DN 50 x 3.91T x 914.8 L	-
2	-2	ELBOW (SEAMLESS)	2	SA 234 GR WPB	DN 50 x 3.91T x 90°, LR, BW	-
2	-1	FLANGE	2	IS 2062 GR E 250 QUALITY B	25T x 165 O/D x (FINISH SIZE)	-
	017B	**JIG SET ASSEMBLY**				
2	-4	BOLT WITH 1 HVY NUT & 2WASHER	4	SA 193 GR B8M & SA 194 Gr B8M	3/8"UNC x 60 LG.	0.16
3	-3A	ANGLE PLATE	2	SA 240 GR 316L	5T x 45W x 585 LG	2.12
3	-3	ANGLE PLATE	2	SA 240 GR 316L	5T x 35W x 585 LG	1.64
3	-2	SUPPORT CLIP	4	SA 240 GR 316L	14T x 50W x 106 LG	2.04
3	-1	DEMISTER SUPPORT RING	1	SA 240 GR 316L	14T x 739.95 O/D x 642.95 I/D	11.84
1	017A	**DEMISTER SUPPORT ASSLY.**				
3	-16	JACK SCREW	3	SS 304	M16 x 115 L (REFER DETAIL)	0.69
	-15	WASHER	1	SS 304	1.5T x 90 OD x 26 ID	0.07
	-14	SNAP HEAD RIVET	1	MS	20ø x 25 L (REF. DETAIL)	0.06
	-13	END PLATE FOR DAVIT PIPE	1	SA 516 GR 70	10T x 77 OD	0.37
	-12	SUPP. PLATE	1	SA 516 GR 70	10T x 87 OD	0.47
	-11	ROD FOR HANDLE	1	SA 36	25ø x 310 D.L.	1.19
	-10	BOSS FOR HANDLE	1	SA 36	109ø x 45 L (FINISH SIZE)	3
	-9	BOSS FOR DAVIT PIPE	1	SA 36	109ø x 109 L (FINISH SIZE)	7
	-8	ROD FOR EYE BOLT	1	SA 105	25ø x 500 D.L.	1.93
	-7	SQ. BAR FOR HOOK	1	SS 316	20 SQ. x 400 D.L.	0.99
3	-6	RIB PLATE	1	SA 516 GR 70	10T x 46W x 220 L	0.96
	-5	PIPE FOR DAVIT	1	SA 106 GR B	DN 80 x 7.62T x 975 D.L.	15
	-4	GUIDE PIPE	1	SA 106 GR B	DN 90 x 5.74T x 248 L	3.36
	-3	RIB PLATE	1	SA 516 GR 70	20T x 150W x 193 L	4.65
	-2	BASE PLATE	1	SA 516 GR 70	20T x 150W x 200 L	4.82
	-1	PAD PLATE	1	SA 240 GR 316L	10T x 270W x 255 DEV.L	5.53
2	017	**DAVIT ASSLY**				
1	-1	PIPE	2	SA 312 TP 316L	DN 65 x 5.16T x 78 L	1.0
	016	**CONN. SV1 & SV2 ASSLY**				
	-1	PIPE	1	SA 106 GR B	DN 250 x 9.27T x 137 L	8.20
	015	**CONN. SO2 ASSLY**				
2	-1	FLANGE	4	SA 182 F 316L	2" ID x 16.67T x ASME 300 CL LWN RF x 235 LG	16.8
	014	**CONN. LT1 & LT2, LT3, LT4 ASSLY**				
2	-1	FLANGE	2	SA 182 F 316L	2" ID x 16.67T x ASME 600 CL LWN RF x 235 LG	8.4
	013	**CONN. L1 & L2 ASSLY**				
	-1	FLANGE	1	SA 182 F 316L	2" ID x 16.67T x ASME 600 CL LWN RF x 235 LG	8.40
	012	**CONN. S ASSLY**				
2	-1	FLANGE	1	SA 182 F 316L	2" ID x 16.67T x ASME 300 CL LWN RF x 255 LG	8.50
	011	**CONN. V ASSLY**				
	-4	STUD WITH 2HVY HEX NUT	8+2	SA 193 GR B7M/SA 194 GR 2HM	5/8" UNC x 125 LG (FULL THRD.)	2.4
	-3	BLIND FLANGE	1	SA 182 F 316L	DN 50 x ASME 600 CL BL RF	3.7
	-2	GASKET	1+2	$	DN 50 x ASME 600 CL B16.20	-
	-1	FLANGE	1	SA 182 F 316L	2" ID x 16.67T x ASME 600 CL LWN RF x 235 LG	8.4
	010	**CONN. B4 ASSLY**				
	-1	FLANGE	1	SA 182 F 316L	2" ID x 16.67T x ASME 600 CL LWN RF x 235 LG	8.4
	09	**CONN. B3 ASSLY**				
2	-10	FLANGE -D	1	SA 182 F 316L	DN 50 x ASME 600 CL WN RF (BORE: ø49.25)	3.51
2	-9	NOZZ.PIPE -D	1	SA 312 TP 316L	DN 50x 5.54T x 65 L	0.56
	-8	OPENING SLEEVE -S01	1	SA 106 GR B	DN 100 x 8.56T x 115L	1.85
	-7	VORTEX BREAKER PLATE	2	SA 240 GR 316L	10T x 50W x 45 LG	0.36
1	-6	VORTEX BREAKER PLATE	1	SA 240 GR 316L	10T x 50W x 100 LG	0.4
	-5	EQ. TEE (SEAMLESS)	1	SA 403 GR WP 316L	DN 50 x 5.54T x BW, STD	2.69
	-4	FLANGE	1	SA 182 F 316L	DN 50 X ASME 600 CL WN RF (BORE: ø49.25)	4.29
1	-3	NOZZ.PIPE	1	SA 312 TP 316L	DN 50x 5.54T x 428L	3.28
	-2	ELBOW (SEAMLESS)	1	SA 403 GR WP 316L	DN 50 x 5.54T x 90°, LR, BW	1.8
1	-1	NOZZ.PIPE	1	SA 312 TP 316L	DN 50x 5.54T x 1665L	12.5
	08	**CONN. B2 & D ASSLY**				
	-2	FLANGE	1	SA 182 F 316L	DN 150 X ASME 300 CL WN RF (BORE: ø124.38)	25.07
1	-1	NOZZ.PIPE	1	SA 312 TP 316L	DN 150 x 21.95T x 155 L	12.2
	07	**CONN. B1 ASSLY**				
3	-3	INLET BOX	1	SA 240 GR 316L	10T x 178 W x 385L	5.07
	-2	FLANGE	1	SA 182 F 316L	DN 80 X ASME 600 CL WN RF (BORE: ø58.42)	9.53
1	-1	NOZZ.PIPE	1	SA 312 TP 316L	DN 80 x 15.24T x 145L	2.3
	06	**CONN. A ASSLY**				
REV. NO	SR. NO	DESCRIPTION	QTY/ ITEM	MATERIAL	SIZE	WT (kg)	REMARK

BILL OF MATERIAL

NOZZLES WELD JOINT NUMBER

MARK	NOZZLE PIPE L/S	PIPE TO FLANGE	NOZZ.PIPE/ LWN TO MAIN SHELL/ BLIND COVER	R-PAD TO SHELL	REMARK
A	-	C201	D201	-	
B1	-	C202	D202	-	
B2	-	C203	D203	-	
B3	-	-	D204	-	
B4	-	-	D205	-	
V	-	-	D206	-	
D	-	C204	-	-	
S	-	-	D208	-	
M	-	C101	-	-	
L1	-	-	D210	-	
L2	-	-	D211	-	
LT1	-	-	D212	-	
LT2	-	-	D213	-	
LT3	-	-	D214	-	
LT4	-	-	D215	-	

REV. NO.	DATE	DESCRIPTION	BY	CHD.	APPD.
4	23-01-2023	AS BUILT DRAWING	GML	AAS	BMP
3	17-09-2022	DRAWING REVISED AS PER CLIENT COMMENT AS MARK. 3	VAP	JD	BMP
2	20-04-2022	DRAWING REVISED AS PER CLIENT COMMENT AS MARK. 2	VAP	KRK	DKB
1	01-01-2022	DRAWING REVISED AS PER CLIENT COMMENT AS MARK.	VAP	KRK	DKB
0	29-07-2021	ISSUED FOR APPROVAL	VAP	KRK	DKB

REVISIONS

EQUIPMENT OWNER

Air Products Manufacturing LLC

ENGINEERING & PROJECT MANAGEMENT

AIR PRODUCTS

CONTRACT NO :

THE ANUP ENGINEERING LTD.
AHMEDABAD

CLIENT:- WORLD ENERGY PARAMOUNT PARAMOUNT, CA | SHEET NO: 2 OF 4 | REV: 4
P.O.NO. : 4505426369 DATE 09.07.2021 | DRG. NO: V-1264-FAD-2021

DRN.	VAP	18-D-272 ARG2 AMINE REGEN REFLUX DRUM H2S RECOVERY UNIT	ITEM NO. 18-D-272
CHD.	KRK		
APPD.	DKB		
DATE	20-10-2021	NOZZLES DETAILS DRAWING	QTY ONE
SCALE	1 : 19		
MFR'S SERIAL No.: V-1264		AP DOCUMENT NUMBER EN207122-ANUP-9V3-00068	SHEET NO. 2 OF 4 · REV. 4 · A1

AS BUILT DRAWING
THE ANUP ENGG. LTD.
TPI

THIS DRAWING MUST NOT WITHOUT OUR CONSENT BE SHOWN TO ANY PERSON OUTSIDE THE RECIPIENT EMPLOY OR BE COPIED OR USED FOR THE PURPOSE OF MANUFACTURING ANY ARTICLE SHOWN IN THE DRAWING AND THE COPYRIGHT IN THE DRAWING SHALL BE AND REMAIN OUR SOLE PROPERTY. THIS DRAWING TOGETHER WITH ANY COPIES MADE BY THE RECIPIENT SHALL BE RETURNED ON DEMAND TO US.

ORIGINAL FRAME SIZE 841 x 594 mm

MFR'S SERIAL NO. : V-1264

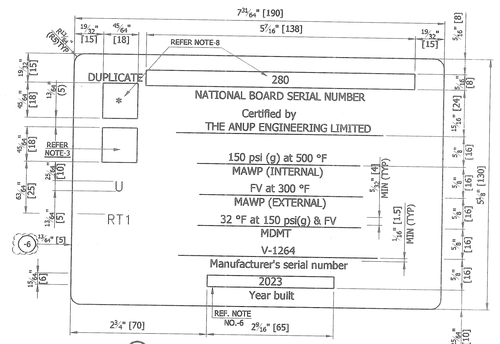

018 DETAIL OF ASME NAME PLATE △△

NOTES:-
1) ALL DIMENSIONS ARE IN mm UNLESS OTHERWISE SHOWN.
2) HEIGHT OF CHARACTERS SHALL BE AT LEAST 4 mm & SHALL BE ENGRAVED IN A BLACK ENAMELED BACKGROUND. CHARACTERS SHALL BE EITHER INDENTED OR RAISED AT LEAST 0.1 mm & SHALL BE LEGIBLE & READABLE.
3) CERTIFICATION MARK (U) TO BE HARD STAMPED IN PRESENCE OF AI AFTER OBTAINING HIS AUTHORIZATION.
4) NAME PLATE SHALL BE RIVETED TO BRACKET AS PER DRAWING.
5) BRACKET WITH NAME PLATE TO BE LOCATED AS MARKED IN DRG.
6) YEAR BUILT SHALL CORRESPOND TO DATE OF HYDROSTATIC TESTING & SHALL BE HARD PUNCHED AFTER SUCCESSFUL COMPLETION OF HYDRO TEST.
7) ALL HARD STAMPED FACE (BLOCK) SHALL BE RAISED FACE.
8) NATIONAL BOARD SYMBOL AND NATIONAL BOARD SERIAL NUMBER AS ADVISED BY HEAD-QUALITY SHALL BE HARD STAMPED IN PRESENCE OF AI AFTER OBTAINING HIS AUTHORIZATION.
9) DELETED

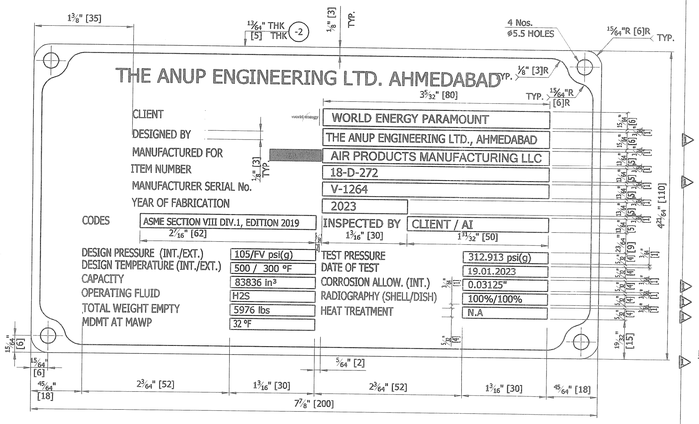

018 DETAIL OF MANUFACTURER NAME PLATE △△

NOTES:-
1) ALL LETTERS, BLOCKS AND BORDER SHALL BE OF RAISED POLISHED FACE.
2) BACK GROUND SHALL BE BLACK.
3) NAME PL. SHALL BE TACK WELDED TO THE BRACKET WHERE NOT POSSIBLE IT MAY BE RIVETED.
4) **TO BE FILLED AFTER HYDROTEST OF EQUIPMENT.

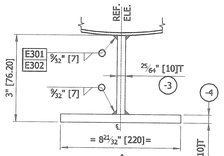

018 DETAIL OF NAME PL. BRACKET

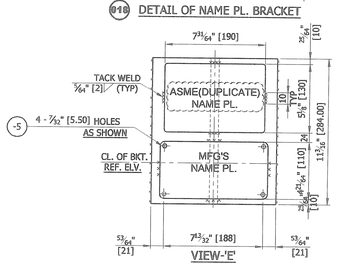

NOTE:
UNDERCUTTING OF SHELL SHALL BE AVOIDED WHEN WELDING BRACKET TO THE VESSEL

GENERAL NOTES:-

DESIGN
1. MECHANICAL DESIGN CALCULATION SHALL BE AS PER ASME SEC.VIII-DIV.1 ED. 2019.
2. CORROSSION ALLOWANCE IS 1/32" [0.8] MM
3. LIFTING LUGS ARE DESIGNED AS PER ASME BTH-1 AND DESIGN CATEGORY B - SERVICE CLASS 0

MATERIAL
1. ALL SS PLATES SHALL BE IN FULLY ANNELED AND PICKELED CONDITION.
2. ALL FORGING MATERIAL SHALL BE SUPPLIED IN SOLUTION ANNELED AND QUENCHED CONDITION.
3. MATERIAL CERTIFICATION SHALL BE AS FOLLOWS
   a. PRESSURE PARTS: EN 10204 TYPE 3.1 CERTIFICATE FOR AIRPRODUCTS APPROVED CONTRIES AND TYPE 3.2 FOR NON APPROVED CONTRIES.
   b. NON PRESSURE PARTS (DIRECTLY WELDED TO PRESSURE PARTS): EN 10204 TYPE 3.1 CERTIFICATE FOR AIRPRODUCTS APPROVED CONTRIES AND TYPE 3.2 FOR NON APPROVED CONTRIES.
4. POSITIVE MATERIAL IDENTIFICATION (PMI) TO BE PERFORMED FOR ALL PRESSURE CONTAINING COMPONENTS COMPONENTS IN ACCORDANCE WITH A8KM-PP-000-500512-A.
5. ALL NOZZLE FLANGES ARE AS PER ASME B 16.5-2017 FOR SIZES DN 600 (NPS 24) & BELOW AND AS PER ASME B 16.47-2017 FOR SIZES ABOVE DN 600 (NPS 24).
6. FLANGE FACING TO BE IN ACCORDANCE WITH ASME B 16.5 SURFACE FINISH: ROUGHNESS Ra 3.2 TO 6.3 µm (Ra 125 TO 250 µinch).
7. SPARE QUANTITY
   a. MANDATORY SPARE
   i. GASKET: 200%
   ii. FASTENERS: 10 % (MIN. 2)
8. ALL PRESSURE PARTS MATERIAL SHALL MEET THE REQUIREMENT OF TPS NO. LISTED BELOW.

SR.NO.	MATERIAL	TPS. NO.
1	SA-240 GR 316L	V-1264-68_SA240_TP316L_PL-REV-0
2	SA-182 F316L	V-1264-70_SA182_F316L_STDFORG-REV-0
3	SA-403 WP 316L	V-1264-70_SA403_GRWP316L-REV-01
4	SA-193 GR B7M	V-1264-70_SA193B7M_STUDS-REV-0
5	SA-194 GR 2HM	V-1264-70_SA1942HM_NUTS-REV-0

9. EXTERNAL SURFACE PREPARATION AND PAINTING SHALL BE AS PER A8KM-PP-000-500520-A AND APPROVED PROCEDURE PAINTING PROCEDURE (EN207122-ANUP-9V3-00015)

FABRICATION
1. ALL DIMENSIONS ARE IN ft-in (mm) UNLESS NOTED OTHERWISE.
2. ALL THICKNESSES SPECIFIED ON THE DRAWING ARE MINIMUM AFTER FORMING AND MACHINING.
3. ROLLING OF PLATES SHALL BE IN LONGITUDINAL DIRECTION OF PLATES.
4. ALL SHARP EDGES AND CORNERS SHALL BE ROUNDED OFF TO SMOOTH RADIUS.
5. RAW MATERIAL IDENTIFICATION SHALL BE CARRIED OUT AS PER APPROVED QAP.
6. WELDING TO BE DONE AS PER THE A8KM-PP-000-500550-A APPROVED WELDING PROCEDURE AND WELD TEST PLAN.
7. ALL BOLT HOLES OF THE NOZZLE FLANGE SHALL STRADDLE CENTERLINE OF THE EQUIPMENT.
8. ALL MACHINED SURFACES, SUCH AS FLANGE FACES, THREADED BOLT HOLES, THREADS, ETC. SHALL BE PROTECTED DURING THE HEAT TREATMENT.
9. ALL ATTACHMENTS DIRECTLY WELDED TO PRESSURE PARTS OF EQUIPMENT SHALL BE OF SAME MATERIAL AS THAT OF PRESSURE PART.
10. NOZZLES SHALL BE LOCATED SO THAT THE NOZZLE, NOZZLE TO VESSEL WELD, AND NOZZLE REINFORCEMENT ARE AT LEAST 2" (50 MM) FROM ALL PRESSURE CONTAINING SHELL AND HEAD WELDS. IF INTERSECTING OR COVERING PRESSURE CONTAINING WELDS CANNOT BE AVOIDED, THE NOZZLE SHALL BE FULLY REINFORCED AND LOW STRESS WELDING DETAILS USED (E.G., GRIND FILLETS TO A SMOOTH CONCAVE RADIUS). PRESSURE CONTAINING WELDS BENEAT REINFORCEMENT SHALL BE GROUND SMOOTH AND FLUSH WITH THE SHELL SURFACE. ALL PRESSURE CONTAINING WELDS SHALL BE 100 PERCENT RADIOGRAPHED AFTER FORMING AND NOZZLE INSTALLATION BUT BEFORE REINFORCING PAD INSTALLATION TO A MINIMUM OF 6 INCHES (150 MM) BEYOND THE NOZZLE TO VESSEL WELD OR THE LIMITS OF THE REINFORCING PAD.
11. THE FLATNESS TOLERANCE OF THE GASKET SEATING SURFACES OF SHELL BODY FLANGES SHALL BE IN ACCORDANCE WITH THE GASKET MANUFACTURER'S RECOMMENDATIONS OR THE TOLERANCE INDICATED IN ASME PCC-1 APPENDIX D, WHICHEVER IS MORE STRINGENT.FLATNESS CHECK SHALL BE PERFORMED AFTER COMPLETING ALL WELDS.
12. VESSEL TOLERANCES SHALL BE AS PER A8KM-PP-000-50801-A

INSPECTION AND TESTING
1. ALL PRESSURE BEARING BUTT WELD JOINTS SHALL BE 100% RT AS PER UW-11(a).
2. 100 % MT/PT SHALL BE PERFORMED FOR ALL WELDS.
3. WELDS JOINING NON-PRESSURE CONTAINING COMPONENTS TO PRESSURE CONTAINING COMPONENTS SHALL BE 100% LIQUID PENETRANT OR MAGNETIC PARTICLE EXAMINED (AFTER PWHT, WHEN PWHT IS REQUIRED). THIS APPLIES TO PERMANENT AND NON-PERMANENT (E.G., LIFTING LUGS, TRUNIONS, ETC.) ATTACHMENTS ON THE INSIDE AND OUTSIDE OF THE VESSEL.
4. WHEN TEMPORARY ATTACHMENTS ARE REMOVED, THE AREA SHALL BE GROUND FLUSH WITH THE SURROUNDING SHELL SURFACE AND LIQUID PENETRANT OR MAGNETIC PARTICLE EXAMINED.
5. APPLICABLE NDE AND INSPECTION SHALL BE AS PER APPROVED PROCEDURES
6. ALL TEMPORARY ATTACHMENTS SHALL BE REMOVED BEFORE HYDROSTATIC TESTING.
7. TEMPORARY ATTACHMENTS SHALL BE REMOVED FLUSH WITH THE VESSEL SHELL AND NONDESTRUCTIVELY EXAMINED [I.E., MAGNETIC PARTICLE EXAMINATIONOR DYE PENETRANT EXAMINATION (PT)], IN ADDITION TO VISUAL EXAMINATION, TO ENSURE NO CRACKS HAVE BEEN GENERATED.

HYDRO TEST
1. DELETED.
2. PRESSURE TESTING SHALL BE COMPLETED BEFORE PRIMERS, PAINT, OR OTHER COATINGS ARE APPLIED.
3. THE HYDROSTATIC TEST MEDIUM SHALL BE CLEAN, FRESH, POTABLE WATER.
4. THE WELDS OF WELDED ATTACHMENTS PROVIDED WITH VENT HOLES (E.G., REINFORCING PADS, SLIPON FLANGES) SHALL BE LEAK TESTED USING 15PSIG (1 KG/CM2 (G)) PNEUMATIC PRESSURE AND A BUBBLE FORMING SOLUTION PRIOR TO POSTWELD HEAT TREATMENT AND FINAL HYDROSTATIC TEST.
5. THE VESSEL SHALL BE DRAINED AND THOROUGHLY DRIED IMMEDIATELY UPON THE COMPLETION OF PRESSURE TESTING. THE PROCEDURE FOR DRAINING THE TEST FLUID SHALL PREVENT DEVELOPMENT OF VACUUM PRESSURE WITHIN THE VESSEL OR ITS INTERNALS. THE PROCEDURE SHALL PREVENT DAMAGE TO OR DISLOCATION OF THE INTERNALS.
6. THE HYDROSTATIC TEST PRESSURE SHALL BE HELD FOR AT LEAST 1 HR.
7. TEST WATER SHALL NOT BE IN CONTACT WITH AUSTENITIC STAINLESS STEEL FOR GREATER THAN 72 HOURS UNLESS TREATED WITH AN APPROPRIATE BIOCIDE.
8. VESSELS OR COMPONENTS MADE OF AUSTENITIC STAINLESS STEEL MATERIALS SHALL BE PERFORMED WITH WATER CONTAINING A MAXIMUM OF 50 PPM CHLORIDE.
9. THE INTERIOR OF THE VESSEL SHALL BE CLEANED IN ACCORDANCE WITHSECTION 4.6.1.2 OF A8K04-PP-000-50801-A & APPROVED CLEANING PROCEDURE

TRANSPORTATION
1. EQUIPMENT SHALL BE PURGED WITH NITROGEN AT 5 psig (G) PRESSURE.
2. ADDITIONAL INDICATIONS SUCH AS NORTH/SOUTH/EAST/WEST ALONG WITH CENTER OF GRAVITY
3. SHALL BE CLEARLY MARKED VESSELS SHALL BE NITROGEN PURGED, FILLED AND HAVE BLIND FLANGES, SERVICE GASKETS, AND FULL BOLTING ON ALL NOZZLES. VENDOR SHALL PROVIDE SPARE DRY NITROGEN BOTTLE.FOR ADDITIONAL REQUIREMENT PLEASE REFER PROJECT SPECIFICATIONA8KM-PP-000-50801-A SECTION 4.6.3 F. 1. I.
4. VERTICAL VESSELS ARE TO BE MARKED ON THE BASE AND FIRST ONE FOOT OF SKIRT, INDICATING THE NORTH, SOUTH, EAST, AND WEST COORDINATES. THE COORDINATES SHALL BE INDICATED WITH A PAINTED LINE AND LETTER FOR EACH, ACCORDING TO TIHE ORIENTATION SHOWN ON THE VESSEL DRAWINGS.
5. THE CENTER OF GRAVITY SHALL BE MARKED ON ALL VERTICAL VESSELS BY PAINTING A CONTINUOUS 3 INCH WIDE CIRCUMFERENTIAL STRIPE. THE LETTERS CG AND SHIPPING WEIGHT IN TONS SHALL BE PAINTED AT 2 LOCATIONS DIAMETRICALLY OPPOSITE AND ADJACENT TO THE STRIPE. THE LOCATION OF TIHE CENTER OF GRAVITY SPECIFIED ON THE VESSEL FABRICATION DRAWINGS IS THAT OF THE VESSEL AS FABRICATED
6. VESSELS OR SECTION OF VESSELS SHALL BE CLEARLY IDENTIFIED BY PAINTING OR DYE STENCILING THE PO NUMBER AND THE VESSEL EQUIPMENT NUMBER IN A CONSPICUOUS LOCATION ON THE SHELL HEAD OR SUPPORT.

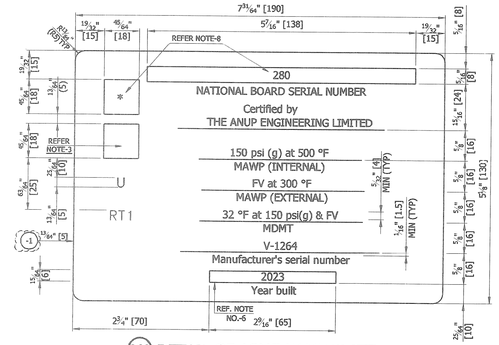

018 DETAIL OF ASME NAME PLATE △

NOTES:-
1) ALL DIMENSIONS ARE IN mm UNLESS OTHERWISE SHOWN.
2) HEIGHT OF CHARACTERS SHALL BE AT LEAST 4 mm & SHALL BE ENGRAVED IN A BLACK ENAMELED BACKGROUND. CHARACTERS SHALL BE EITHER INDENTED OR RAISED AT LEAST 0.1 mm & SHALL BE LEGIBLE & READABLE.
3) CERTIFICATION MARK (U) TO BE HARD STAMPED IN PRESENCE OF AI AFTER OBTAINING HIS AUTHORIZATION.
4) NAME PLATE SHALL BE RIVETED TO BRACKET AS PER DRAWING.
5) BRACKET WITH NAME PLATE TO BE LOCATED AS MARKED IN DRG.
6) YEAR BUILT SHALL CORRESPOND TO DATE OF HYDROSTATIC TESTING & SHALL BE HARD PUNCHED AFTER SUCCESSFUL COMPLETION OF HYDRO TEST.
7) ALL HARD STAMPED FACE (BLOCK) SHALL BE RAISED FACE.
8) NATIONAL BOARD SYMBOL AND NATIONAL BOARD SERIAL NUMBER AS ADVISED BY HEAD-QUALITY SHALL BE HARD STAMPED IN PRESENCE OF AI AFTER OBTAINING HIS AUTHORIZATION.

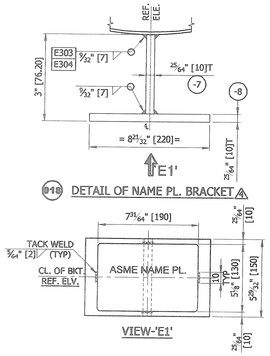

018 DETAIL OF NAME PL. BRACKET △

NOTE:
UNDERCUTTING OF SHELL SHALL BE AVOIDED WHEN WELDING BRACKET TO THE VESSEL

APPLICABLE STANDARDS

SR. NO.	STD. NO.	DESCRIPTION	REV. NO.
1	A8KM-PP-000-53007-D	VESSEL NAMEPLATE BRACKET	0
2	A8KM-PP-000-53026-D	VESSEL VORTEX BREAKERS	0A
3	A8KM-PP-000-53008-D	VESSEL GROUNDING LUG	0
4	A8KM-PP-000-53021-D	VESSEL VERTICAL MANWAY DAVITS	0
5	A8KM-PP-000-53027-D	VESSEL INTERNAL RUNGS	0
6	A8KM-PP-000-530006-D	SKIRT OPENING VERTICAL VESSELS	0A
7	A8KM-PP-000-53007-D	VESSEL NAMEPLATE BRACKET	0
8	A8KM-PP-000-530001-D	MIST ELIMINATOR DETAILS	0A
9	A8KM-PP-000-530029-D	SKIRT ATTACHMENT	0A

REFERENCE SPECIFICATIONS

SR. NO.	SPEC. NO.	DESCRIPTION	REV. NO.
1	A8KM-PP-000-500550-A	WELDING/NDE REQUIREMENTS FOR EQUIPMENT	0A
2	A8KM-18-088-540321-A	MECHANICAL EQUIPMENT DATA SHEET FOR 18-X-261	D
3	A8KM-PP-000-500512-A	POSITIVE MATERIAL IDENTIFICATION (PMI)	0
4	A8KM-PP-000-500520-A	PAINTING	0D
5	A8KM-PP-000-50005-A	DESIGN OF LIFTING COMPONENTS FOR MECHANICAL EQUIPMENT	0
6	A8KM-PP-000-500540-A	GALVANIZING	0A
7	A8KM-PP-000-50801-A	DESIGN AND FABRICATION SPECIFICATION FOR VESSELS ASME CODE SECTION VIII, DIVISIONS 1 AND 2.	0
8	A8KM-PP-000-50840-A	DESIGN AND FABRICATION SPECIFICATION FOR PRESSURE VESSEL INTERNALS	0

AS BUILT DRAWING

THE ANUP ENGG. LTD.

REV. NO.	DATE	DESCRIPTION	BY	CHD.	APPD.
4	23-01-2023	AS BUILT DRAWING	GML	AAS	BMP
3	17-09-2022	DRAWING REVISED AS PER CLIENT COMMENT AS MARK △	VAP	JD	BMP
2	20-04-2022	DRAWING REVISED AS PER CLIENT COMMENT AS MARK △	VAP	KRK	DKB
1	01-01-2022	DRAWING REVISED AS PER CLIENT COMMENT AS MARK	VAP	KRK	BMP
0	29-07-2021	ISSUED FOR APPROVAL	VAP	KRK	BMP

REVISIONS

EQUIPMENT OWNER
Air Products Manufacturing LLC

ENGINEERING & PROJECT MANAGEMENT
AIR PRODUCTS

CONTRACT NO :

THE ANUP ENGINEERING LTD.
AHMEDABAD

CLIENT:- WORLD ENERGY PARAMOUNT PARAMOUNT, CA | SHEET NO: 3 OF 4 | REV: 4
P.O.NO. : 4505426369 DATE 09.07.2021 | DRG. NO: V-1264-FAD-2021

DRN.	VAP	18-D-272 ARG2 AMINE REGEN REFLUX DRUM H2S RECOVERY UNIT	ITEM NO. 18-D-272
CHD.	-		
APPD.	BMP		
DATE	20-10-2021	NAME PLATE AND GENERAL NOTES DETAILS DRAWING	QTY ONE
SCALE	1 : 19		
MFR'S SERIAL No.: V-1264		AP DOCUMENT NUMBER EN207122-ANUP-9V3-00028	SHEET NO. 3 OF 4 · REV. 4 · A1

REV NO.	SR. NO.	DESCRIPTION	QTY/ ITEM	MATERIAL	SIZE	WT. (kg)	REMARK
4	WELD JOINT NO.: E301 TO E304						
					SUB TOTAL OF WEIGHT (KG)	6	
4	-8	NAME PLATE BRACKET PLT.-2	1	SA 240 GR 316L	10T x 220W x 150 LG.	2.65	
4	-7	NAME PLATE BRACKET PLT.-1	1	SA 240 GR 316L	10T x 66.2W x 150 LG.	0.8	
4	-6	ASME DUPLICATE NAME PLATE	1	SS 304	5T x 130W x 190 LG	0.99	
4	-5	RIVET	8	ALLUMINIUM	ø5 x 20 LG	-	
	-4	NAME PLATE BRACKET PLT.-2	1	SA 240 GR 316L	10T x 220W x 284 LG.	3	
	-3	NAME PLATE BRACKET PLT.-1	1	SA 240 GR 316L	10T x 66.2W x 284 LG.	1.02	
	-2	MFG'S NAME PLATE	1	SS 304	5T x 110W x 200 LG	0.88	
	-1	ASME NAME PLATE	1	SS 304	5T x 130W x 190 LG	0.99	
	018	NAME PLATE ASSLY					

BILL OF MATERIAL

THIS DRAWING MUST NOT WITHOUT OUR CONSENT BE SHOWN TO ANY PERSON OUTSIDE THE RECIPIENT EMPLOY OR BE COPIED OR USED FOR THE PURPOSE OF MANUFACTURING ANY ARTICLE SHOWN IN THE DRAWING AND THE COPYRIGHT IN THE DRAWING SHALL BE AND REMAIN OUR SOLE PROPERTY. THIS DRAWING TOGETHER WITH ANY COPIES MADE BY THE RECIPIENT SHALL BE RETURNED ON DEMAND TO US.

ORIGINAL FRAME SIZE 841 x 594 mm.

MFR'S SERIAL NO. : V-1264

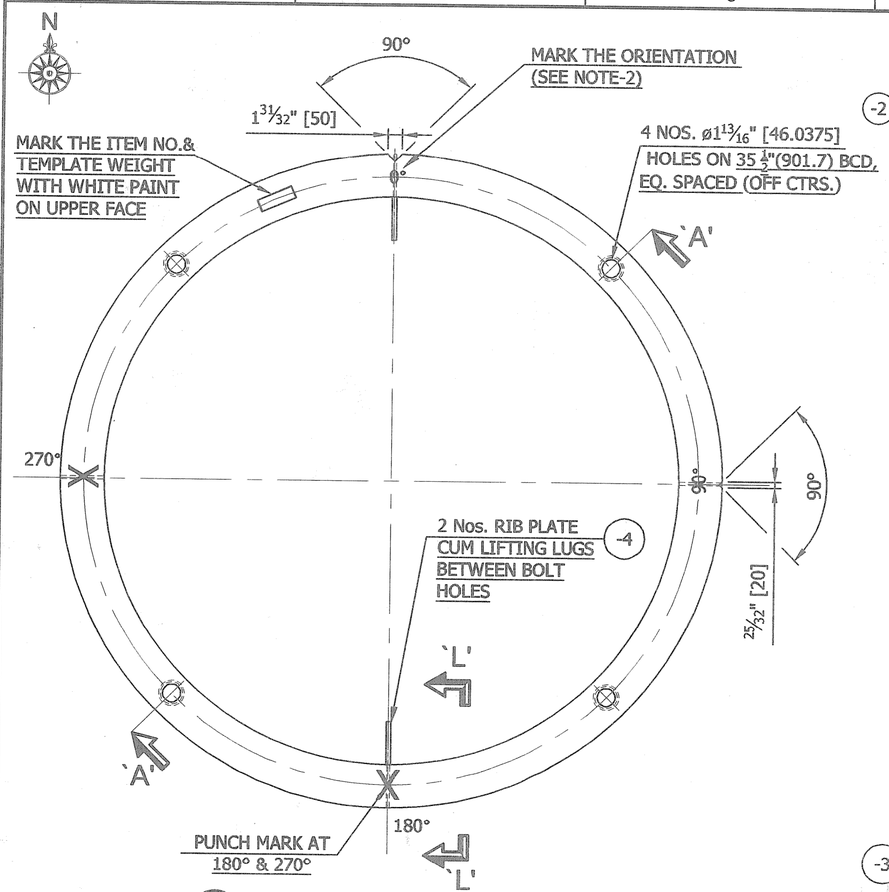

019 DETAIL OF TEMPLATE

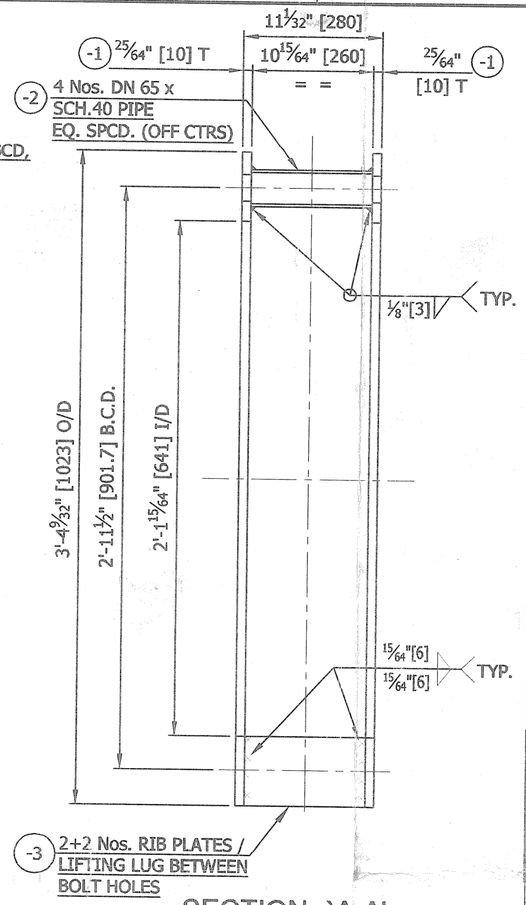

SECTION- `A-A'

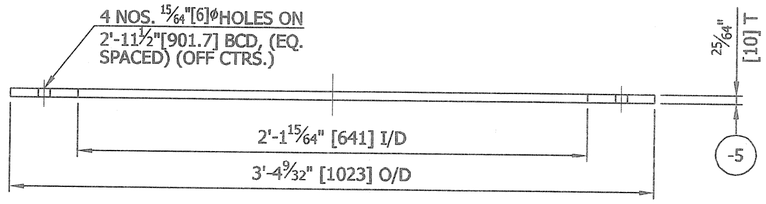

019 DETAIL OF GAUGE PLATE

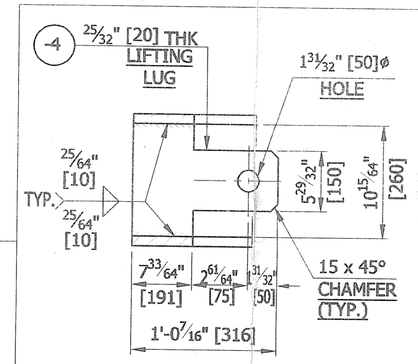

SECTION-'L-L'

NOTES:-

1. ALL DIMENSIONS ARE IN mm.
2. ORIENTATION MARK 0°, 90° & ITEM NO. & TEMPLATE WEIGHT TO BE MARKED BY WHITE PAINT ON THE TOP SURFACE OF THE TEMPLATE & PUNCH MARK AT 180° & 270° ON THE TOP SURFACE OF TEMPLATE.
3. THE ORIENTATION 0° MEANS PLANT NORTH.
4. GAUGE PLATE NOT TO BE SUPPLIED.
5. EXTERNAL SURFACE OF TEMPLATE SHALL BE CLEANED BY WIRE BRUSH & PAINTED WITH ONE COAT OF RUST PREVENTIVE COATING OF RED OXIDE.
6. ALL THE HOLES IN TEMPLATE & BASE RING OF COLUMN SHALL BE DRILLED TOGETHER USING THE SAME GAUGE PLATE. THE CONCENTRICITY BETWEEN TOP & BOTTOM RINGS TO BE CHECKED BY HOLE PIN GAUGE.
7. TEMPLATE SHALL BE REINFORCED FOR TRANSPORTATION, INSTALLATION AND ADJUST EASILY FOR SITE ASSEMBLY.
8. TOLERANCE ON BOLT HOLE SPACING SHALL BE +1.0 mm, HEIGHT OF TEMPLATE SHALL BE ±3 mm & B.C.D. SHALL BE ±3 mm.
9. WELD SEAM SHALL BE GROUND FLUSH ON SURFACE OF TEMPLATE & GAUGE PLATE.

REV. NO.	SR. NO.	DESCRIPTION	QTY./ ITEM	MATERIAL	SIZE	WT. (kg)	REMARK
					SUB TOTAL OF WEIGHT (KG)	217	
	-5	GAUGE PLATE	1	IS 2062 GR E250 QUALITY B	10T x 1023 O/D x 641 I/D	39	
	-4	PLATE FOR LIFTING LUG	2	IS 2062 GR E250 QUALITY B	20T x 260W x 316 L (AS PER DET.)	26	
	-3	RIB PLATE	2	IS 2062 GR E250 QUALITY B	10T x 191W x 260 LG	8	
	-2	PIPE	4	SA 106 GR B	DN 65 x SCH.40 x 260 L	65	
	-1	TOP & BOTTOM RING	2	IS 2062 GR E250 QUALITY B	10T x 1023 O/D x 641 I/D	79	
	019	TEMPLATE & GAUGE PLATE ASSLY					

BILL OF MATERIAL

AS BUILT DRAWING

THE ANUP ENGG. LTD.

Noted 02/02/2023

TPI

REV. NO.	DATE	DESCRIPTION	BY	CHD.	APPD.
2	23-01-2023	AS BUILT DRAWING	GML	AAS	BMP
1	18-05-2022	DRAWING REVISED AS PER CLIENT COMMENT AS MARKED AS ISSUE FOR APPROVAL	GML	KRK	BMP
0	21-01-2022	ISSUED FOR APPROVAL	VWU	HCR/KRK	BMP

REVISIONS

OWNER

Air Products Manufacturing LLC

ENGINEERING & PROJECT MANAGEMENT

AIR PRODUCTS

CONTRACT NO :

THE ANUP ENGINEERING LTD.
AHMEDABAD

CLIENT:- WORLD ENERGY PARAMOUNT PARAMOUNT, CA | SHEET NO: 4 OF 4 | REV: 0

P.O.NO. : 4505426369 DATE 09.07.2021 | DRG. NO: V-1264-FAD-2021

DRN.	VWU	18-D-272 ARG2 AMINE REGEN REFLUX DRUM H2S RECOVERY UNIT	ITEM NO. 18-D-272
CHD.	HCR / KRK		
APPD.	BMP		
DATE	21-10-2021	SKIRT TEMPLATE DRAWING	QTY ONE
SCALE	1 : 19		

MFR'S SERIAL No.: V-1264

AP DOCUMENT NUMBER: 1 EN207122-ANUP-9V3-00073

SHEET NO. 4 OF 4 | REV. 0 1 2 | A3

MFR'S SERIAL NO. : V-1264

THIS DRAWING MUST NOT WITHOUT OUR CONSENT BE SHOWN TO ANY PERSON OUTSIDE THE RECIPIENT EMPLOY OR BE COPIED OR USED FOR THE PURPOSE OF MANUFACTURING ANY ARTICLE SHOWN IN THE DRAWING AND THE COPYRIGHT IN THE DRAWING SHALL BE AND REMAIN OUR SOLE PROPERTY. THIS DRAWING TOGETHER WITH ANY COPIES MADE BY THE RECIPIENT SHALL BE RETURNED ON DEMAND TO US.

ORIGINAL FRAME SIZE 841 X 594 (mm)

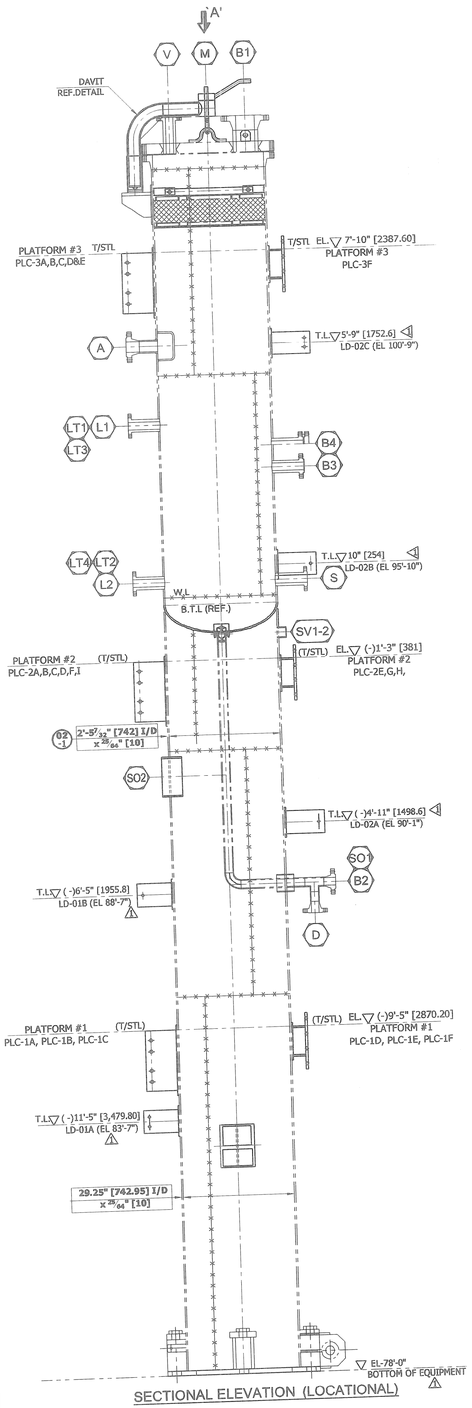

SECTIONAL ELEVATION (LOCATIONAL)

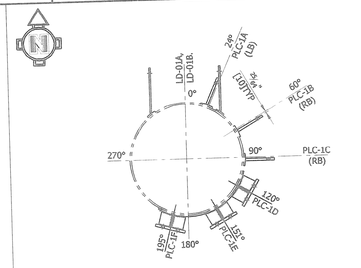

ORIENTATION PLAN VIEW-'A' PLATFORM #1 (T/STL 85' 7")

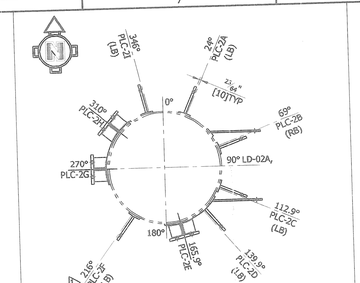

ORIENTATION PLAN VIEW-'A' PLATFORM #2 (T/STL 93' 9")

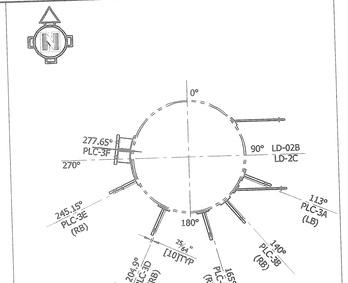

ORIENTATION PLAN VIEW-'A' PLATFORM #3 (T/STL 102' 10")

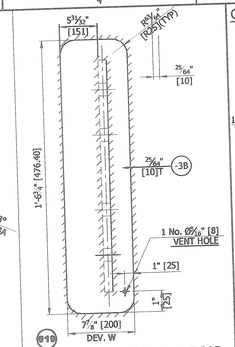

DETAIL OF PLATFORM CLEAT PAD (PLC-2F)

GENERAL NOTES :

1) ALL DIMENSIONS ARE IN mm UNLESS OTHERWISE SHOWN.
2) IF ANY ATTACHMENT LIKE REINFORCEMENT PADS, INTERNALS, CLEATS ETC. SHALL PREFERABLY BE AWAY FROM THE MAIN SEAMS. IN CASE IT IS UNAVOIDABLE, THE MAIN SEAM PORTION COMING UNDER THE ATTACHMENT PLUS 150MM LENGTH ON BOTH SIDES SHALL BE GROUND FLUSH, FULLY RADIOGRAPHED AND DYE PENETRANT EXAMINED BEFORE WELDING OF ANY SUCH ATTACHMENT.
3) TO CUT SUITABLE NOTCH IN CLEAT TO AVOID FOULING WITH WELD SEAM.

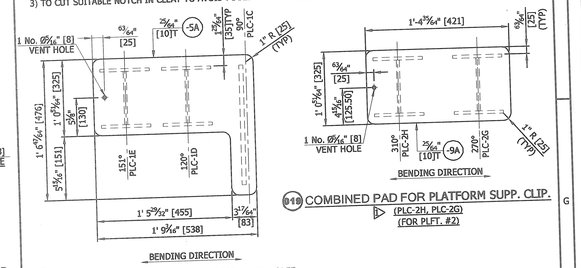

010 COMBINED PAD FOR PLATFORM SUPP. CLIP. (PLC-2H, PLC-2G) (FOR PLFT. #2)

010 COMBINED PAD FOR PLATFORM SUPP. CLIP. (PLC-1D,E, PLC-1C) (FOR PLFT. #1)

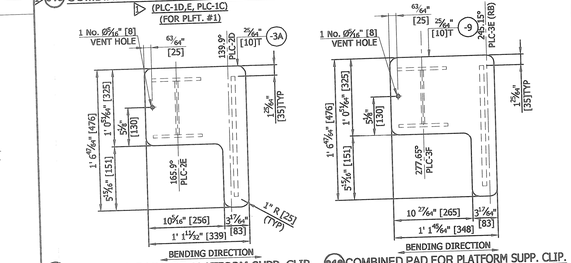

010 COMBINED PAD FOR PLATFORM SUPP. CLIP. (PLC-2E, PLC-2D) (FOR PLFT. #2)

010 COMBINED PAD FOR PLATFORM SUPP. CLIP. (PLC-3E, PLC-3F) (FOR PLFT. #3)

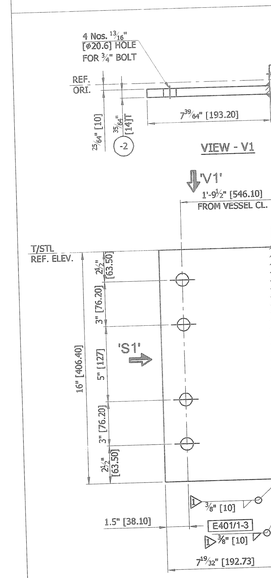

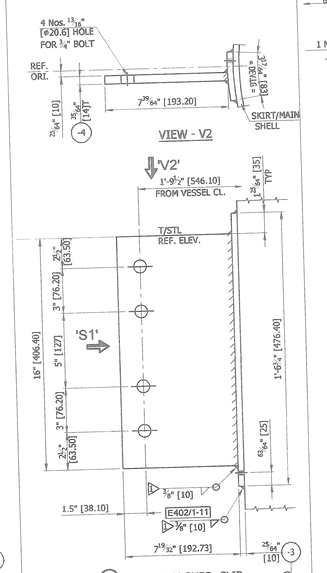

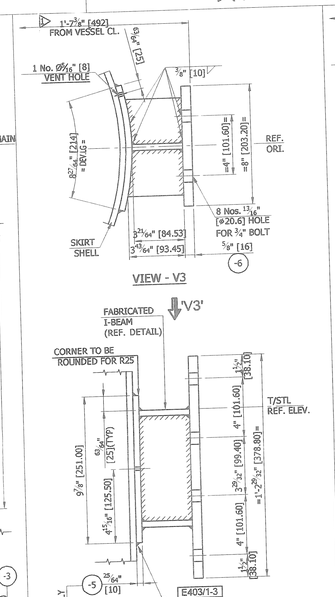

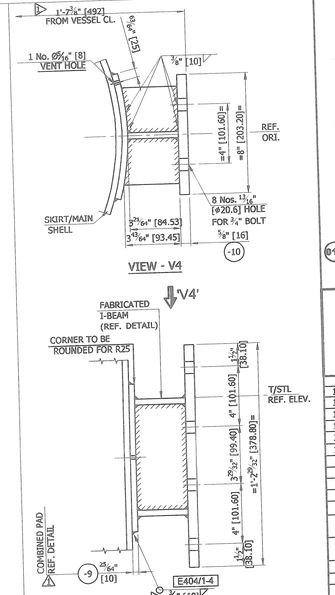

AS BUILT DRAWING

THE ANUP ENGG. LTD.

TPI

WELD JOINT NO.: E401 TO E408					SUB TOTAL OF WEIGHT (KG)	309	
1	-1	PAD PLATE (LD-01A)	2	SA 516 GR 70	10T x 62 DEV.W x 203 L	1.98	
1	-2	LADDER CLEAT (LD-01A)	2	SA 516 GR 70	10T x 152.4W x ~312 LG. (REF. DETAIL)	7.46	
1	-3	PAD PLATE (LD-01B)	2	SA 516 GR 70	10T x 62 DEV.W x 203 L	1.98	
1	-4	LADDER CLEAT (LD-01B)	2	SA 516 GR 70	10T x 152.4W x ~312 LG. (REF. DETAIL)	7.46	
1	-5	PAD PLATE (LD-02A, LD-02B)	3	SA 240 GR 316L	10T x 62 DEV.W x 203 L	2.97	
1	-5A	PAD PLATE (LD-02B)	1	SA 240 GR 316L	10T x 170 DEV.W x 203 L	2.7	
1	-6	LADDER CLEAT (LD-02A,LD-02B)	4	SA 516 GR 70	10T x 152.4W x ~337 LG. (REF. DETAIL)	16.12	
1	-7	PAD PLATE (LD-02C)	2	SA 240 GR 316L	10T x 152.4W x ~337 LG. (REF. DETAIL)	8.06	
1	-8	LADDER CLEAT (LD-02C)	2	SA 516 GR 70	10T x 62 DEV.W x 203 L	1.98	
	020	**LADDER SUPPORT CLIP. ASSLY.**					
	-12	PLATE FOR I-BEAM (PLC-2E,G,H)(PLC-3F)	4	SA 516 GR 70	10T x 181W x 93.45 LG. (CUT TO SUIT) (REF. DETAIL)	5.24	
	-11	PLATE FOR I-BEAM (PLC-2E,G,H)(PLC-3F)	8	SA 516 GR 70	10T x 165W x ~93.45 LG. (CUT TO SUIT) (REF. DETAIL)	9.6	
	-10	SUPP.PLATE (PLC-2E,G,H)(PLC-3F)	4	SA 516 GR 70	16T x 203.2W x 378.8 LG.	24	
1	-9A	COMBINED RF PAD FOR (PLC-2H, PLC-2G)	1	SA 516 GR 70	10T x 325W x 421 DEV.L (REF. DETAIL)	11	
1	-9	COMBINED RF PAD FOR (PLC-3E, PLC-3F)	1	SA 240 GR 316L	10T x 348 DEV. W x 476 L (REF. DETAIL)	13	
	-8	PLATE FOR I-BEAM (PLC-1D,E,F)	3	SA 516 GR 70	10T x 181W x 93.45 LG. (CUT TO SUIT) (REF. DETAIL)	4	
	-7	PLATE FOR I-BEAM (PLC-1D,E,F)	6	SA 516 GR 70	10T x 165W x ~93.45 LG. (CUT TO SUIT) (REF. DETAIL)	7.2	
	-6	SUPP.PLATE (PLC-1D,E,F)	3	SA 516 GR 70	16T x 203.2W x 378.8 LG.	18	
1	-5A	COMBINED RF PAD FOR (PLC-1D,E, PLC-1C)	1	SA 516 GR 70	10T x 538 DEV. W x 476 L (REF. DETAIL)	20	
1	-5	PAD PLATE (PLC-1F)	1	SA 516 GR 70	10T x 214 DEV.W x 251L	4.22	
	-4	CLEAT FOR (PLC-2A,B,C,D,F,I) (PLC-3A,B,C,D,E)	11	SA 516 GR 70	14T x 193.2W x 406.4 LG.(REF. DETAIL)	70	
1	-3B	PAD PLATE - (PLC-2F)	1	SA 240 GR 316L	10T x200 DEV.W x 477 L	7.5	
1	-3A	COMBINED RF PAD FOR (PLC-2E, PLC-2D)	1	SA 516 GR 70	10T x 339 DEV. W x 476L (REF. DETAIL)	12	
1	-3	PAD PLATE - (PLC-2A,B,C,I) (PLC-3A,B,C,D)	8	SA 240 GR 316L	10T x 83 DEV.W x 477 L	28	
	-2	CLEAT FOR -(PLC-1A TO 1C)	3	SA 516 GR 70	14T x 193.2W x 406.4 LG.(REF. DETAIL)	19	
1	-1	PAD PLATE -(PLC-1A, PLC-1B)	2	SA 516 GR 70	10T x 83 DEV.W x 477 L	6	
	010	**PLATFORM SUPPORT ASSLY.**					

REV. NO.	SR. NO.	DESCRIPTION	QTY./ ITEM	MATERIAL	SIZE	WT. (kg)	REMARK

BILL OF MATERIAL

REV. NO.	DATE	DESCRIPTION	BY	CHD.	APPD.
2	23-01-2023	AS BUILT DRAWING	GML	AAS	BMP
1	30-11-2022	ISSUED FOR APPROVAL	SBL	AAS	BMP
0	17-09-2022	ISSUED FOR APPROVAL	VAP	RCP	BMP

REVISIONS

EQUIPMENT OWNER: Air Products Manufacturing LLC

ENGINEERING & PROJECT MANAGEMENT: AIR PRODUCTS

CONTRACT NO :

THE ANUP ENGINEERING LTD. AHMEDABAD

CLIENT:- WORLD ENERGY PARAMOUNT PARAMOUNT, CA | SHEET NO: 1 OF 1 | REV: 1

P.O.NO. : 4505426369 DATE 09.07.2021 | DRG. NO: V-1264-FAD-2021

DRN.	VAP	18-D-272 ARG2 AMINE REGEN REFLUX DRUM	ITEM NO. 18-D-272
CHD.	-	H2S RECOVERY UNIT	
APPD.	BMP		
DATE	01-09-2022	EXTERNAL ATTACHMENT DRAWING	QTY ONE
SCALE	1 : 19		

MFR'S SERIAL No.: V-1264 | AP DOCUMENT NUMBER EN207122-ANUP-9V3-00020 | SHEET NO. 1 OF 1 | REV. 0 1 2 | A1

MFR'S SERIAL NO. : V-1264

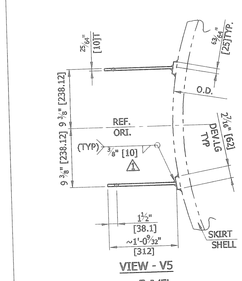

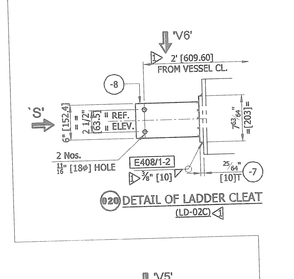

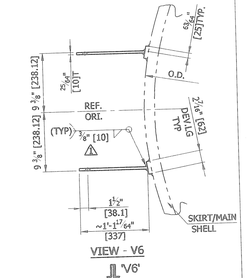

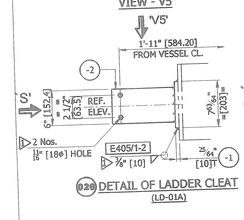

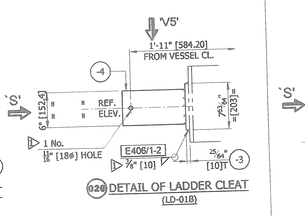

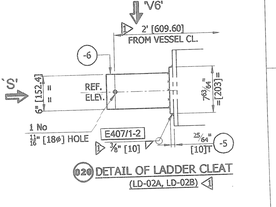

020 DETAIL OF LADDER CLEAT (LD-02C)

020 DETAIL OF LADDER CLEAT (LD-01A)

020 DETAIL OF LADDER CLEAT (LD-01B)

020 DETAIL OF LADDER CLEAT (LD-02A, LD-02B)

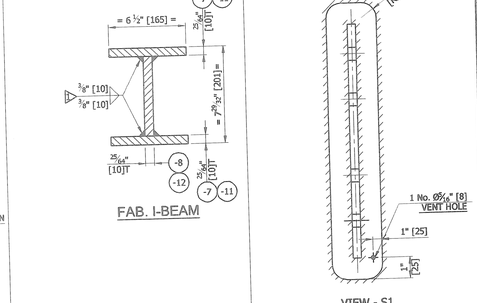

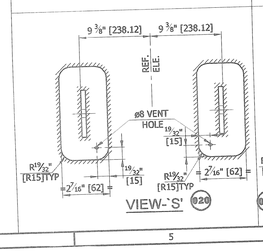

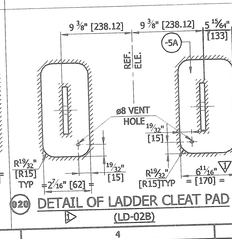

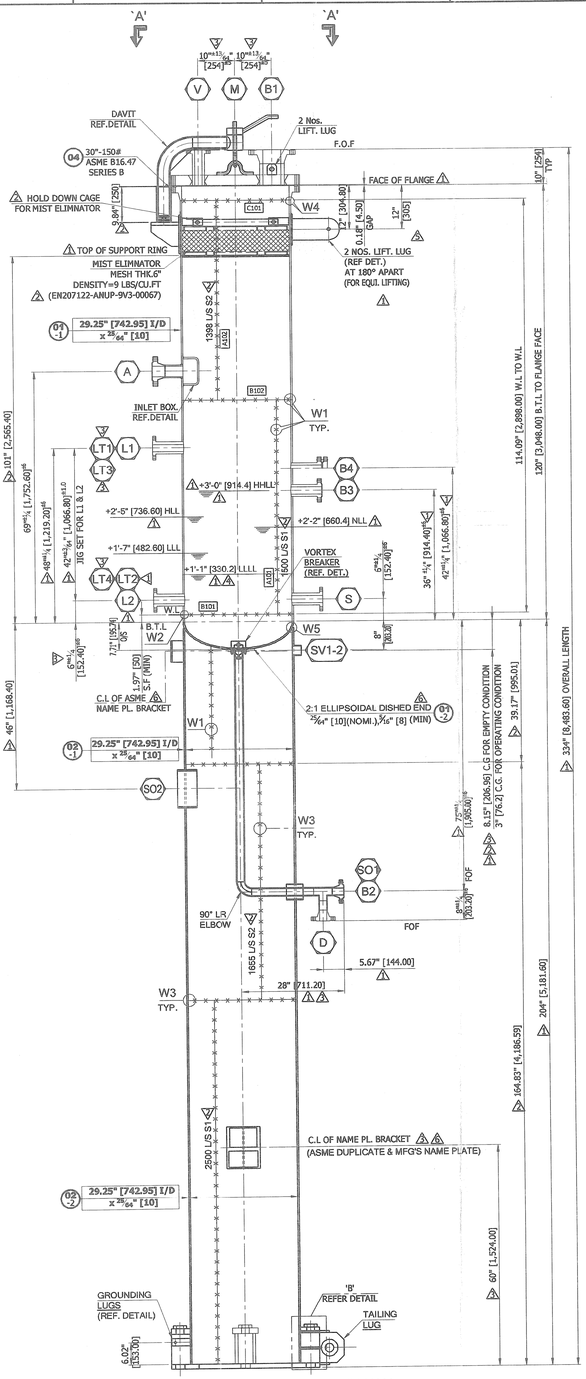

SECTIONAL ELEVATION (LOCATIONAL)

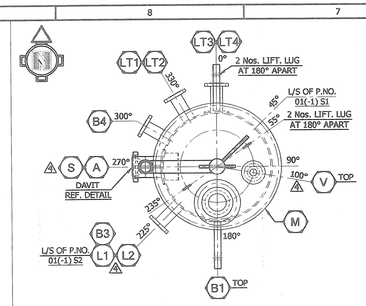

ORIENTATION PLAN VIEW -'A-A'
(FOR MAIN SHELL & TOP HEAD)

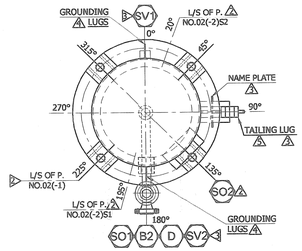

ORIENTATION PLAN VIEW -'A-A'
(FOR SKIRT SHELL & BTM. HEAD)

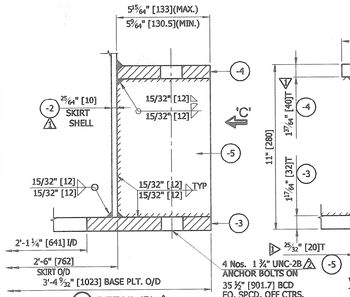

DETAIL-'B'

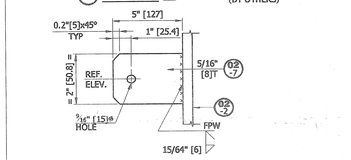

DETAIL OF GROUNDING LUG

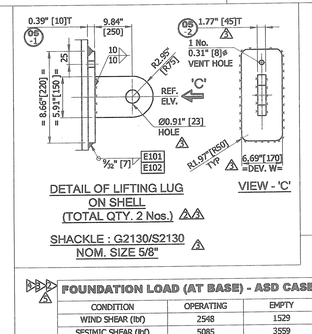

DETAIL OF LIFTING LUG ON SHELL
(TOTAL QTY. 2 Nos.)

SHACKLE : G2130/S2130
NOM. SIZE 5/8"

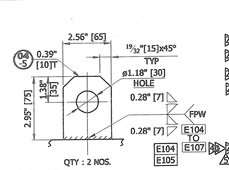

DET. OF LIFTING LUG ON BLIND FLANGE

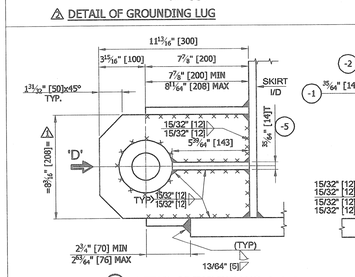

DETAIL OF TAILING LUG

SHACKLE : G2130/S2130
NOM. SIZE 1"

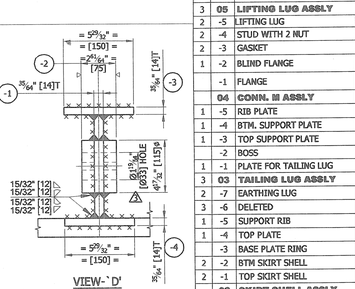

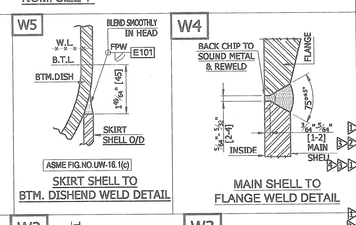

SKIRT SHELL TO BTM. DISHEND WELD DETAIL

MAIN SHELL TO FLANGE WELD DETAIL

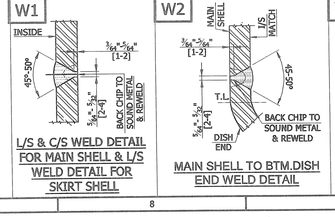

L/S & C/S WELD DETAIL FOR MAIN SHELL & L/S WELD DETAIL FOR SKIRT SHELL

MAIN SHELL TO BTM.DISH END WELD DETAIL

L/S & C/S WELD DETAIL FOR SKIRT SHELL

DESIGN DATA

1	CONSTRUCTION CODE		ASME SECTION VIII DIV.1, EDITION 2019
	ASME 'U' STAMP REQUIREMENT		YES
	NATIONAL BOARD REGISTRATION		YES
	HYDROGEN SERVICE		NO
	CYCLIC SERVICE		NO
	SOUR SERVICE		YES
2	FLUID CIRCULATED / SERVICE		H2S
3	MAWP / MAEWP	Psig [kg/cm²]	150 [10.5461] (LIMITED BY NOZZ. M BLD. / FLG.) / 15
4	MAP (GOVERNING COMPONENT)	Psig [kg/cm²]	230 [16.1706] (LIMITED BY NOZZ. M BLD. / FLG.)
5	DESIGN PRESSURE (INT./EXT.)	Psig [kg/cm²]	105 [7.382] / FV
6	DESIGN TEMPERATURE (INT./EXT.)	°F (°C)	500 (260) / 300 (149)
7	OPERATING PRESSURE	Psig [kg/cm²]	10 [0.703]
8	OPERATING TEMPERATURE	°F (°C)	105 (40.5)
9	MDMT @ MAWP	°F (°C)	32 (0.0)
10	LOWEST ALLOWABLE MDMT @ MAWP	°F (°C)	32 (0.0)
11	SHOP HYDRO TEST PRESSURE BASED ON MAP CALCULATED UG-99(c) (HORIZONTAL)	Psig [kg/cm²]	312.913[22]
12	SITE HYDRO TEST PRESSURE BASED ON UG-99(b)	Psig [kg/cm²]	220.034[15.469]
13	CORROSION ALLOWANCE (VESSEL) (INTERNAL)	in (mm)	1/32"(0.8)
14	RADIOGRAPHY (SHELL / DISH)		100%/100%
15	WELD JOINT EFFICIENCY (SHELL/DISH)		1.0 / 1.0
16	POST WELD HEAT TREATMENT		EXEMPTED AS PER UHA-32
17	POST FORMING HEAT TREATMENT		EXEMPTED AS PER UHA-44
18	IMPACT TEST REQUIREMENT		N.A
19	INSULATION (TYPE / THK.)	in (mm)	NONE
20	FIRE PROOFING THK. (ON SKIRT)	in (mm)	NONE
21	WIND DESIGN AS PER		ASCE 7-16 EXP CATEGORY C RISK CATEGORY III KZT = 1
22	BASIC WIND SPEED	mph	101
23	SEISMIC DESIGN AS PER		ASCE 7-16 IMPORTANCE FACTOR, I=1.25 SITE CLASS D, SS=1.516, S1=0.859,Fa = 1.0Fv = 1.721,Sds = 1.077,Sd1 = 0.996, R = 3
24	CAPACITY	in³	83836
25	FLUID GRAVITY (LIQUID)		0.99 @ 105°F
26	PAINTING / CLEANING		AS PER A8KM-PP-000-500520-A
27	INSPECTION BY		AMUP / AP / AI
28	WEIGHT — EMPTY WEIGHT ~lb[kg]		~5976 [2711]
	WEIGHT — OPERATING WEIGHT~lb[kg]		~11331 [5140]
	WEIGHT — HYDRO TEST WEIGHT AT SHOP ~lb[kg]		~9032 [4097]

MATERIAL OF CONSTRUCTION

SHELL / DISH END	SA 240 GR 316L
SKIRT	SA 240 GR 316L / SA 516 GR 70
BASE PLATE & CHAIRS	SA 516 GR 70
NOZZLE NECKS & PIPE	SA 240 GR 316L/ SA 312 GR 316L
FLANGES (EXTERNAL)	SA 182 F 316L
FITTINGES	SA 403 WP 316L
BOLTS (EXTERNAL)	SA 193 GR B7M / SA 194 GR 2HM
INTERNALS (FIXED)	SS 316L
ANCHOR BOLTS	ASTM F1554 GR 36 (BY OTHER)

4.5T SS 316 SPWD GASKET WITH GRAPHITE FILLER AND 3.2T SS 316 INNER & SS OUTER RING. (DIMENSIONS AS PER ASME B 16.20)

WET H2S

FOUNDATION LOAD (AT BASE) - ASD CASE

CONDITION	OPERATING	EMPTY
WIND SHEAR (lbf)	2548	1529
SESIMIC SHEAR (lbf)	5085	3559
WIND MOMENT (ft-lb)	44691	26814
SESIMIC MOMENT (ft-lb)	102252	71577

NOZZLE LOADING DATA

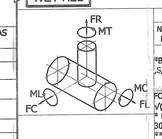

NOZZLE MARK	SIZE NPS(DN)	F_R (lbf)	F_C (lbf)	F_L (lbf)	M_C (lbf-ft)	M_L (lbf-ft)	M_T (lbf-ft)
**B1	6"(150)	1600	1200	1600	1600	2100	2400
*B2,B3,B4 ,S,L1,L2,D	2"(50)	630	470	630	210	270	310
**A	3"(80)	810	610	810	400	520	600

FOR HEAD NOZZLE MRESULTANT: V(ML2+MC2) AND FRESULTANT: V(FL2+FC2)
* NOZZLE LOADS ARE AS PER TABLE 5, A8KM-PP-000-50801-A FOR 300 CLASS FLANGE RATING
** NOZZLE LOADS ARE AS PER TABLE 5, A8KM-PP-000-50801-A FOR 150 CLASS FLANGE RATING

BILL OF MATERIAL

REV. NO.	SR. NO.	DESCRIPTION				QTY/ ITEM	MATERIAL			SIZE	W1. (kg)	REMARK
										SUB TOTAL OF WEIGHT (Kg)	2260	
2		# # 1/16"[4.5]T SS 316 SPWD GASKET WITH GRAPHITE FILLER AND 1/8" [3.2]T SS 316 INNER & SS OUTER RING. (DIMENSIONS AS PER ASME B 16.20)										
2		WELD JOINT NO.: A101, A102,C101, B101, B102, E101 TO E105										
3	-2	LIFTING LUG			2	SA 516 GR 70				45T x 150W x 325 LG (REF. DETAIL)	34.4	
3	-1	LIFTING LUG PAD			2	SA 240 GR 316L				10T x 170 DEV.W x 220 LG	5.9	
3	05	LIFTING LUG ASSLY										
2	-5	LIFTING LUG			2	SA 240 GR 316L				10T x 65W x 75 LG	0	
2	-4	STUD WITH 2 NUT			44+5	SA 193 GR B7M/SA 194 GR 2HM				3/4" UNC x 185 LG (FULL THRD)	25	
2	-3	GASKET			1+2	##				NPS 30" ASME 150 CL ASME B 16.20	-	
1	-2	BLIND FLANGE			1	SA 182 F 316L				NPS 30" ASME 150 CL BL RF (tf=70)	340	ASME B16.47 SERIES-B
1	-1	FLANGE			1	SA 182 F 316L				NPS 30 x BORE 8742.95 x ASME 150 CL WN RF	80	ASME B16.47 SERIES-B
1	04	CONN. III ASSLY										
1	-5	RIB PLATE			2	SA 516 GR 70				14T x 30.5W x 143 L	0.96	
1	-4	BTM. SUPPORT PLATE			1	SA 516 GR 70				14T x 150W x 76 L	1.25	
1	-3	TOP SUPPORT PLATE			1	SA 516 GR 70				14T x 150W x 208 L (REF. DETAIL)	3.43	
	-2	BOSS			1	SA 516 GR 70				ø115 x 75 (FINISH SIZE)	6	
1	-1	PLATE FOR TAILING LUG			1	SA 516 GR 70				14T x 208W x 300 L	7	
3	03	TAILING LUG ASSLY										
2	-7	EARTHING LUG			2	SS 304				8T x 50.8W x 127 LG	0.62	
3	-6	DELETED										
1	-5	SUPPORT RIB			8	SA 516 GR 70				20T x 132 W x 208 LG	35	
1	-4	TOP PLATE			4	SA 516 GR 70				40T x 133W x 178 LG	30	
	-3	BASE PLATE RING			1	SA 516 GR 70				32T x 1023 O/D x 641 I/D	126	
2	-2	BTM SKIRT SHELL			1	SA 516 GR 70				10T x 4155W x 2366 DEV. LG.	771	
2	-1	TOP SKIRT SHELL			1	SA 240 GR 316L				10T x 950W x 2366 DEV. LG.	180	
	02	SKIRT SHELL ASSLY										
	-2	BTM DISHED END			1	SA 240 GR 316L				10T(NOM.) x 985 B.DIA	62	
	-1	MAIN SHELL			1	SA 240 GR 316L				10T x 2898W x 2366 DEV.L	551	
	01	MAIN SHELL ASSLY										
		DELETED										
		DELETED										
SV1-SV2	2	2.5"(65)	40	0.2" [5.16]	-	-	-	SKIRT VENT	-	-	-	
SO2	1	10"(250)	40	0.36" [9.27]	-	-	-	SKIRT INSPECTION OPENING	-	-	-	
SO1	1	4"(100)	40	0.24"[6.02]	-	-	-	SKIRT OPENINING FOR NOZZLE 'B2'	-	-	-	
LT1,LT2, LT3,LT4	4	50.8 I/D (2" I/D)	-	0.65" [16.67]	300	LWN	RF	LEVEL TRANSMITTER (18-LT-D272A/B) (LL LEVEL TRIP)	1'-11" [585]	-	-	
L1/L2	2	50.8 I/D (2" I/D)	-	0.65" [16.67]	600	LWN	RF	LEVEL GAUGE (18-LI-D272C)	1'-11" [585]	-	-	
M	1	30(750)	-	0.39" [10]	150	WN	RF	MAN WAY W/ BLIND & DAVIT	SEE DRG.		ASME B16.47 SERIES-B	
S	1	50.8 I/D (2" I/D)	-	0.65" [16.67]	600	LWN	RF	STEAM OUT	1'-11" [585]			
D	1	2(50)	80S	0.22"[5.54]	600	WN	RF	DRAIN	SEE DRG.	-	-	
V	1	50.8 I/D (2" I/D)	-	0.65" [16.67]	300	LWN	RF	VENT	SEE DRG.	-	-	
B4	1	50.8 I/D (2" I/D)	-	0.65" [16.67]	600	LWN	RF	FUTURE PUMP MINIMUM FLOW W/ BLIND	1'-11" [585]	-	BLIND	
B3	1	50.8 I/D (2" I/D)	-	0.65" [16.67]	600	LWN	RF	SPARE NOZZLE	1'-11" [585]	-		
B2	1	2(50)	80S	0.22"[5.54]	600	WN	RF	LIQUID OUTLET	SEE DRG.	-	VORTEX BREAKER	
B1	1	6(150)	XXS	0.88"[21.95]	300	WN	RF	VAPOR OUTLET	SEE DRG.	-		
A	1	3(80)	XXS	0.6"[15.24]	600	WN	RF	FEED INLET	1'- 11"[585]	DELETED	INLET BOX	

NOZZLES AND CONNECTIONS

MARK	QTY.	SIZE NPS(DN)	SCH.	THK.	CLASS	TYPE	FACE	SERVICE	PROJ. FROM CL.	RF PAD T x OD	REMARK
		PIPE			ASME B16.5,B16.47-B FLANGE						

AS BUILT DRAWING

Reviewed

THE ANUP ENGG. LTD.

AI

EN207122-ANUP-9V3-00046	V-1264-TRANS-2021	1 OF 1	TRANSPORTATION DRAWING	1
EN207122-ANUP-9V3-00020	V-1264-FAD-2021	1 OF 1	EXTERNAL ATTACHMENT DRAWING	2
EN207122-ANUP-9V3-00073	V-1264-FAD-2021	4 OF 4	SKIRT TEMPLATE DRAWING	2
EN207122-ANUP-9V3-00028	V-1264-FAD-2021	3 OF 4	NAME PLATE AND GENERAL NOTES DETAILS DRAWING	4
EN207122-ANUP-9V3-00068	V-1264-FAD-2021	2 OF 4	DETAIL FABRICATION DRAWINGS	4
AP DOC. NO.	DRG.NO.	SHT.No.	DESCRIPTION	REV.

REFERENCE DRAWING

REV. NO.	DATE	DESCRIPTION	BY	CHD.	APPD.
6	23-01-2023	AS BUILT DRAWING	GML	AAS	BMP
5	30-11-2022	DRAWING REVISED AS MARKED	SBL	AAS	BMP
4	17-09-2022	DRAWING REVISED AS PER CLIENT COMMENT AS MARK.	VAP	AAS	BMP
3	20-04-2022	DRAWING REVISED AS PER CLIENT COMMENT AS MARK.	VAP	KRK	BMP
2	01-01-2022	DRAWING REVISED AS PER CLIENT COMMENT AS MARK.	VAP	KRK	BMP
1	14-10-2021	DRAWING REVISED AS PER CLIENT COMMENT AS MARK.	VAP	KRK	BMP
0	29-07-2021	ISSUED FOR APPROVAL	-	VAP	BMP

REVISIONS

EQUIPMENT OWNER

Air Products Manufacturing LLC

ENGINEERING & PROJECT MANAGEMENT

AIR PRODUCTS

CONTRACT NO :

THE ANUP ENGINEERING LTD.
AHMEDABAD

CLIENT:- WORLD ENERGY PARAMOUNT PARAMOUNT, CA
P.O.NO. : 4505426369 DATE 09.07.2021
SHEET NO: 1 OF 4 REV: 6
DRG. NO: V-1264-FAD-2021

DRN.	VAP
CHD.	KHK
APPD.	BMP
DATE	29-07-2021
SCALE	1 : 19

18-D-272 ARG2 AMINE REGEN REFLUX DRUM
H2S RECOVERY UNIT

ITEM NO. 18-D-272

GENERAL ARRANGEMENT DRAWING

QTY ONE

MFR'S SERIAL No.: V-1264
AP DOCUMENT NUMBER EN207122-ANUP-9V3-00007
SHEET NO. 1 OF 4
REV. 0 1 2 3 4 5 6
A1

MFR'S SERIAL NO. : V-1264

THIS DRAWING MUST NOT WITHOUT OUR CONSENT BE SHOWN TO ANY PERSON OUTSIDE THE RECIPIENT EMPLOY OR BE COPIED OR USED FOR THE PURPOSE OF MANUFACTURING ANY ARTICLE SHOWN IN THE DRAWING AND THE COPYRIGHT IN THE DRAWING SHALL BE AND REMAIN OUR SOLE PROPERTY. THIS DRAWING TOGETHER WITH ANY COPIES MADE BY THE RECIPIENT SHALL BE RETURNED ON DEMAND TO US.

ORIGINAL FRAME SIZE 841 x 594 mm

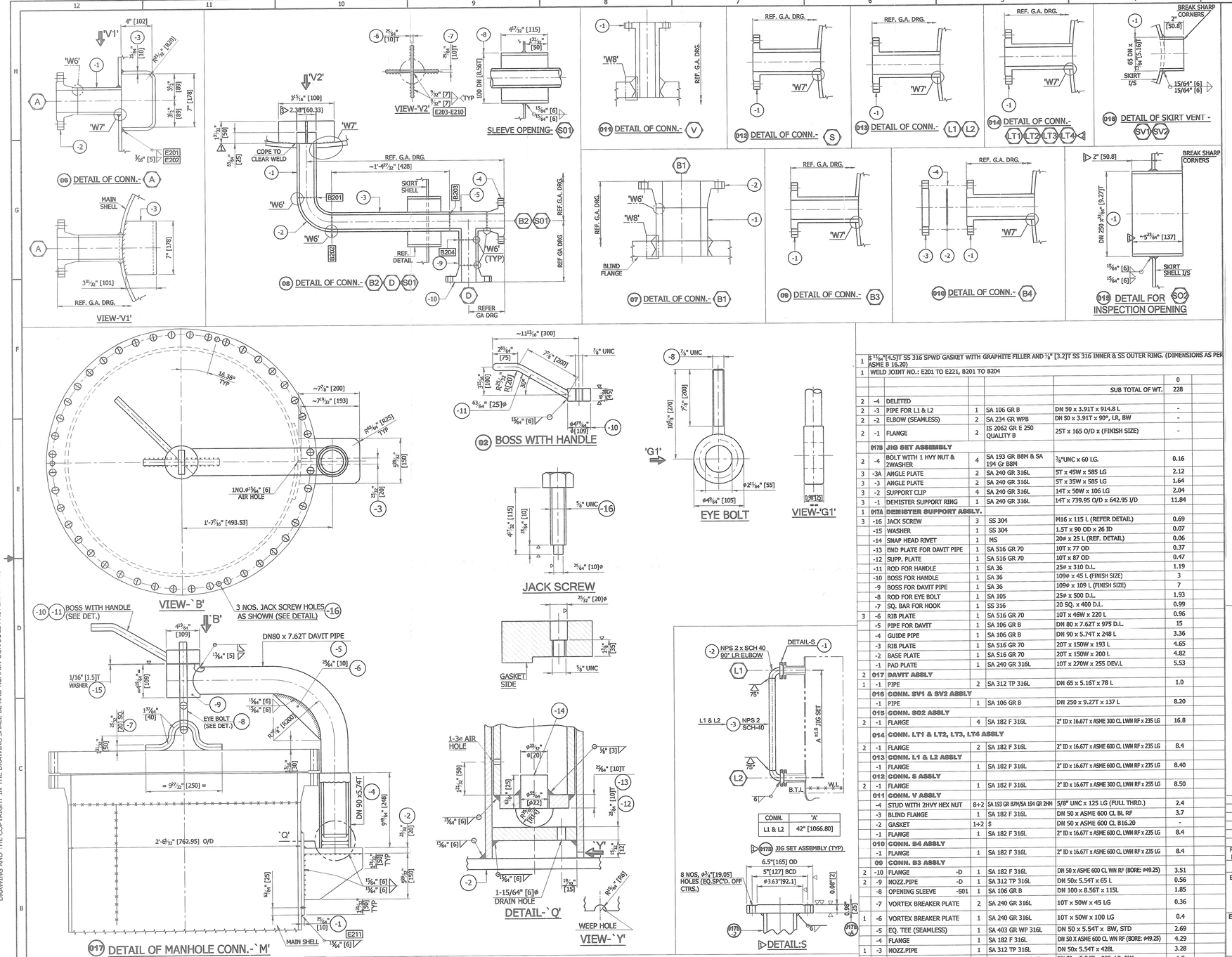

1		5 11/64"[4.5]T SS 316 SPWD GASKET WITH GRAPHITE FILLER AND 1/8" [3.2]T SS 316 INNER & SS OUTER RING. (DIMENSIONS AS PER ASME B 16.20)					
1		WELD JOINT NO.: E201 TO E221, B201 TO B204					
					SUB TOTAL OF WT.	0 228	
2	-4	DELETED					
2	-3	PIPE FOR L1 & L2	1	SA 106 GR B	DN 50 x 3.91T x 914.8 L	-	
2	-2	ELBOW (SEAMLESS)	2	SA 234 GR WPB	DN 50 x 3.91T x 90°, LR, BW	-	
2	-1	FLANGE	2	IS 2062 GR E 250 QUALITY B	25T x 165 O/D x (FINISH SIZE)	-	
	017B	**JIG SET ASSEMBLY**					
2	-4	BOLT WITH 1 HVY NUT & 2WASHER	4	SA 193 GR B8M & SA 194 Gr B8M	3/8"UNC x 60 LG.	0.16	
3	-3A	ANGLE PLATE	2	SA 240 GR 316L	5T x 45W x 585 LG	2.12	
3	-3	ANGLE PLATE	2	SA 240 GR 316L	5T x 35W x 585 LG	1.64	
3	-2	SUPPORT CLIP	4	SA 240 GR 316L	14T x 50W x 106 LG	2.04	
3	-1	DEMISTER SUPPORT RING	1	SA 240 GR 316L	14T x 739.95 O/D x 642.95 I/D	11.84	
1	017A	**DEMISTER SUPPORT ASSLY.**					
3	-16	JACK SCREW	3	SS 304	M16 x 115 L (REFER DETAIL)	0.69	
	-15	WASHER	1	SS 304	1.5T x 90 OD x 26 ID	0.07	
	-14	SNAP HEAD RIVET	1	MS	20Ø x 25 L (REF. DETAIL)	0.06	
	-13	END PLATE FOR DAVIT PIPE	1	SA 516 GR 70	10T x 77 OD	0.37	
	-12	SUPP. PLATE	1	SA 516 GR 70	10T x 87 OD	0.47	
	-11	ROD FOR HANDLE	1	SA 36	25Ø x 310 D.L.	1.19	
	-10	BOSS FOR HANDLE	1	SA 36	109Ø x 45 L (FINISH SIZE)	3	
	-9	BOSS FOR DAVIT PIPE	1	SA 36	109Ø x 109 L (FINISH SIZE)	7	
	-8	ROD FOR EYE BOLT	1	SA 105	25Ø x 500 D.L.	1.93	
	-7	SQ. BAR FOR HOOK	1	SS 316	20 SQ. x 400 D.L.	0.99	
3	-6	RIB PLATE	1	SA 516 GR 70	10T x 46W x 220 L	0.96	
	-5	PIPE FOR DAVIT	1	SA 106 GR B	DN 80 x 7.62T x 975 D.L.	15	
	-4	GUIDE PIPE	1	SA 106 GR B	DN 90 x 5.74T x 248 L	3.36	
	-3	RIB PLATE	1	SA 516 GR 70	20T x 150W x 193 L	4.65	
	-2	BASE PLATE	1	SA 516 GR 70	20T x 150W x 200 L	4.82	
	-1	PAD PLATE	1	SA 240 GR 316L	10T x 270W x 255 DEV.L	5.53	
2	017	**DAVIT ASSLY**					
1	-1	PIPE	2	SA 312 TP 316L	DN 65 x 5.16T x 78 L	1.0	
	016	**CONN. SV1 & SV2 ASSLY**					
	-1	PIPE	1	SA 106 GR B	DN 250 x 9.27T x 137 L	8.20	
	015	**CONN. SO2 ASSLY**					
2	-1	FLANGE	4	SA 182 F 316L	2" ID x 16.67T x ASME 300 CL LWN RF x 235 LG	16.8	
	014	**CONN. LT1 & LT2, LT3, LT4 ASSLY**					
2	-1	FLANGE	2	SA 182 F 316L	2" ID x 16.67T x ASME 600 CL LWN RF x 235 LG	8.4	
	013	**CONN. L1 & L2 ASSLY**					
	-1	FLANGE	1	SA 182 F 316L	2" ID x 16.67T x ASME 600 CL LWN RF x 235 LG	8.40	
	012	**CONN. S ASSLY**					
2	-1	FLANGE	1	SA 182 F 316L	2" ID x 16.67T x ASME 300 CL LWN RF x 255 LG	8.50	
	011	**CONN. V ASSLY**					
	-4	STUD WITH 2HVY HEX NUT	8+2	SA 193 GR B7M/SA 194 GR 2HM	5/8" UNC x 125 LG (FULL THRD.)	2.4	
	-3	BLIND FLANGE	1	SA 182 F 316L	DN 50 x ASME 600 CL BL RF	3.7	
	-2	GASKET	1+2	$	DN 50 x ASME 600 CL B16.20	-	
	-1	FLANGE	1	SA 182 F 316L	2" ID x 16.67T x ASME 600 CL LWN RF x 235 LG	8.4	
	010	**CONN. B4 ASSLY**					
	-1	FLANGE	1	SA 182 F 316L	2" ID x 16.67T x ASME 600 CL LWN RF x 235 LG	8.4	
	09	**CONN. B3 ASSLY**					
2	-10	FLANGE -D	1	SA 182 F 316L	DN 50 x ASME 600 CL WN RF (BORE: ø49.25)	3.51	
2	-9	NOZZ.PIPE -D	1	SA 312 TP 316L	DN 50x 5.54T x 65 L	0.56	
	-8	OPENING SLEEVE -S01	1	SA 106 GR B	DN 100 x 8.56T x 115L	1.85	
	-7	VORTEX BREAKER PLATE	2	SA 240 GR 316L	10T x 50W x 45 LG	0.36	
1	-6	VORTEX BREAKER PLATE	1	SA 240 GR 316L	10T x 50W x 100 LG	0.4	
	-5	EQ. TEE (SEAMLESS)	1	SA 403 GR WP 316L	DN 50 x 5.54T x BW, STD	2.69	
	-4	FLANGE	1	SA 182 F 316L	DN 50 X ASME 600 CL WN RF (BORE: ø49.25)	4.29	
1	-3	NOZZ.PIPE	1	SA 312 TP 316L	DN 50x 5.54T x 428L	3.28	
	-2	ELBOW (SEAMLESS)	1	SA 403 GR WP 316L	DN 50 x 5.54T x 90°, LR, BW	1.8	
1	-1	NOZZ.PIPE	1	SA 312 TP 316L	DN 50x 5.54T x 1665L	12.5	
	08	**CONN. B2 & D ASSLY**					
	-2	FLANGE	1	SA 182 F 316L	DN 150 X ASME 300 CL WN RF (BORE: ø124.38)	25.07	
1	-1	NOZZ.PIPE	1	SA 312 TP 316L	DN 150 x 21.95T x 155 L	12.2	
	07	**CONN. B1 ASSLY**					
3	-3	INLET BOX	1	SA 240 GR 316L	10T x 178 W x 385L	5.07	
	-2	FLANGE	1	SA 182 F 316L	DN 80 X ASME 600 CL WN RF (BORE: ø58.42)	9.53	
1	-1	NOZZ.PIPE	1	SA 312 TP 316L	DN 80 x 15.24T x 145L	2.3	
	06	**CONN. A ASSLY**					
REV. NO	SR. NO	DESCRIPTION	QTY/ ITEM	MATERIAL	SIZE	WT (kg)	REMARK

BILL OF MATERIAL

NOZZLES WELD JOINT NUMBER

MARK	NOZZLE PIPE I/S	PIPE TO FLANGE	NOZZ.PIPE/ LWN TO MAIN SHELL/ BLIND COVER	R-PAD TO SHELL	REMARK
A	-	C201	D201	-	
B1	-	C202	D202	-	
B2	-	C203	D203	-	
B3	-	-	D204	-	
B4	-	-	D205	-	
V	-	-	D206	-	
D	-	C204	-	-	
S	-	-	D208	-	
M	-	C101	-	-	
L1	-	-	D210	-	
L2	-	-	D211	-	
LT1	-	-	D212	-	
LT2	-	-	D213	-	
LT3	-	-	D214	-	
LT4	-	-	D215	-	

REV. NO.	DATE	DESCRIPTION	BY	CHD.	APPD.
4	23-01-2023	AS BUILT DRAWING	GML	AAS	BMP
3	17-09-2022	DRAWING REVISED AS PER CLIENT COMMENT AS MARK.	VAP	JD	BMP
2	20-04-2022	DRAWING REVISED AS PER CLIENT COMMENT AS MARK.	VAP	KRK	DKB
1	01-01-2022	DRAWING REVISED AS PER CLIENT COMMENT AS MARK.	VAP	KRK	DKB
0	29-07-2021	ISSUED FOR APPROVAL	VAP	KRK	DKB

REVISIONS

EQUIPMENT OWNER

Air Products Manufacturing LLC

ENGINEERING & PROJECT MANAGEMENT

AIR PRODUCTS

CONTRACT NO :

THE ANUP ENGINEERING LTD.
AHMEDABAD

CLIENT:- WORLD ENERGY PARAMOUNT PARAMOUNT, CA | SHEET NO: 2 OF 4 | REV: 4

P.O.NO. : 4505426369 DATE 09.07.2021 | DRG. NO: V-1264-FAD-2021

DRN.	VAP	18-D-272 ARG2 AMINE REGEN REFLUX DRUM H2S RECOVERY UNIT	ITEM NO. 18-D-272
CHD.	KRK		
APPD.	DKB		
DATE	20-10-2021	NOZZLES DETAILS DRAWING	QTY ONE
SCALE	1 : 19		

MFR'S SERIAL No.: V-1264 | AP DOCUMENT NUMBER EN207122-ANUP-9V3-00068 | SHEET NO. 2 OF 4 | REV. 4 | A1

AS BUILT DRAWING

THE ANUP ENGG. LTD.

Reviewed

MFR'S SERIAL NO. : V-1264

ORIGINAL FRAME SIZE 841 x 594 mm

THIS DRAWING MUST NOT WITHOUT OUR CONSENT BE SHOWN TO ANY PERSON OUTSIDE THE RECIPIENT EMPLOY OR BE COPIED OR USED FOR THE PURPOSE OF MANUFACTURING ANY ARTICLE SHOWN IN THE DRAWING AND THE COPYRIGHT IN THE DRAWING SHALL BE AND REMAIN OUR SOLE PROPERTY. THIS DRAWING TOGETHER WITH ANY COPIES MADE BY THE RECIPIENT SHALL BE RETURNED ON DEMAND TO US.

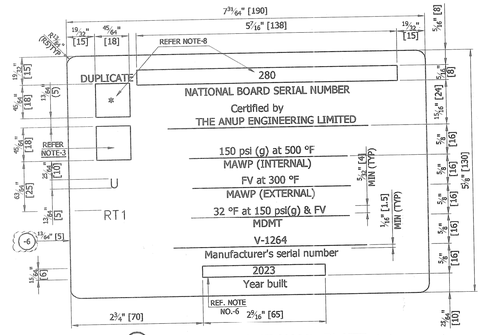

018 DETAIL OF ASME NAME PLATE △△

NOTES:-
1) ALL DIMENSIONS ARE IN mm UNLESS OTHERWISE SHOWN.
2) HEIGHT OF CHARACTERS SHALL BE AT LEAST 4 mm & SHALL BE ENGRAVED IN A BLACK ENAMELED BACKGROUND. CHARACTERS SHALL BE EITHER INDENTED OR RAISED AT LEAST 0.1 mm & SHALL BE LEGIBLE & READABLE.
3) CERTIFICATION MARK(%) TO BE HARD STAMPED IN PRESENCE OF AI AFTER OBTAINING HIS AUTHORIZATION.
4) NAME PLATE SHALL BE RIVETED TO BRACKET AS PER DRAWING.
5) BRACKET WITH NAME PLATE TO BE LOCATED AS MARKED IN DRG.
6) YEAR BUILT SHALL CORRESPOND TO DATE OF HYDROSTATIC TESTING & SHALL BE HARD PUNCHED AFTER SUCCESSFUL COMPLETION OF HYDRO TEST.
7) ALL HARD STAMPED FACE (BLOCK) SHALL BE RAISED FACE.
8) NATIONAL BOARD SYMBOL AND NATIONAL BOARD SERIAL NUMBER AS ADVISED BY HEAD-QUALITY SHALL BE HARD STAMPED IN PRESENCE OF AI AFTER OBTAINING HIS AUTHORIZATION.
9) DELETED

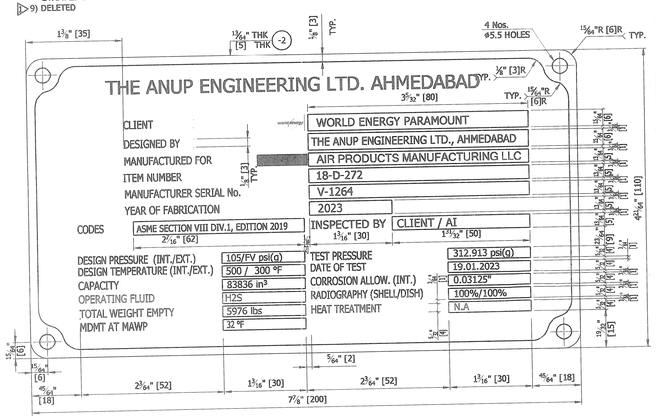

018 DETAIL OF MANUFACTURER NAME PLATE △△

NOTES:-
1) ALL LETTERS, BLOCKS AND BORDER SHALL BE OF RAISED POLISHED FACE.
2) BACK GROUND SHALL BE BLACK.
3) NAME PL. SHALL BE TACK WELDED TO THE BRACKET WHERE NOT POSSIBLE IT MAY BE RIVETED.
4) **TO BE FILLED AFTER HYDROTEST OF EQUIPMENT.

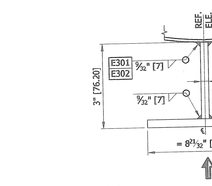

018 DETAIL OF NAME PL. BRACKET

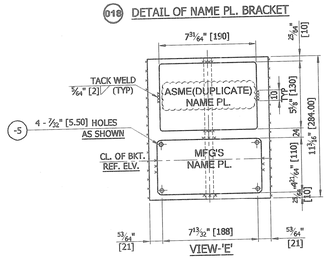

NOTE:
UNDERCUTTING OF SHELL SHALL BE AVOIDED WHEN WELDING BRACKET TO THE VESSEL

GENERAL NOTES:-

DESIGN
1. MECHANICAL DESIGN CALCULATION SHALL BE AS PER ASME SEC.VIII-DIV.1 ED. 2019.
2. CORROSION ALLOWANCE IS 1/32" [0.8] MM
3. LIFTING LUGS ARE DESIGNED AS PER ASME BTH-1 AND DESIGN CATEGORY B - SERVICE CLASS 0

MATERIAL
1. ALL SS PLATES SHALL BE IN FULLY ANNELED AND PICKELED CONDITION.
2. ALL FORGING MATERIAL SHALL BE SUPPLIED IN SOLUTION ANNELED AND QUENCHED CONDITION.
3. MATERIAL CERTIFICATION SHALL BE AS FOLLOWS
   a. PRESSURE PARTS: EN 10204 TYPE 3.1 CERTIFICATE FOR AIRPRODUCTS APPROVED CONTRIES AND TYPE 3.2 FOR NON APPROVED CONTRIES.
   b. NON PRESSURE PARTS (DIRECTLY WELDED TO PRESSURE PARTS): EN 10204 TYPE 3.1 CERTIFICATE FOR AIRPRODUCTS APPROVED CONTRIES AND TYPE 3.2 FOR NON APPROVED CONTRIES.
4. POSITIVE MATERIAL IDENTIFICATION (PMI) TO BE PERFORMED FOR ALL PRESSURE CONTAINING COMPONENTS COMPONENTS IN ACCORDANCE WITH A8KM-PP-000-500512-A.
5. ALL NOZZLE FLANGES ARE AS PER ASME B 16.5-2017 FOR SIZES DN 600 (NPS 24) & BELOW AND AS PER ASME B 16.47-2017 FOR SIZES ABOVE DN 600 (NPS 24).
6. FLANGE FACING TO BE IN ACCORDANCE WITH ASME B 16.5 SURFACE FINISH: ROUGHNESS Ra 3.2 TO 6.3 µm (Ra 125 TO 250 µinch).
7. SPARE QUANTITY
   a. MANDATORY SPARE
   i. GASKET: 200%
   ii. FASTENERS: 10 % (MIN. 2)
8. ALL PRESSURE PARTS MATERIAL SHALL MEET THE REQUIREMENT OF TPS NO. LISTED BELOW.

SR.NO.	MATERIAL	TPS. NO.
1	SA-240 GR 316L	V-1264-58_SA240_TP316L_PL-REV-0
2	SA-182 F316L	V-1264-70_SA182_F316L_STDFORG-REV-0
3	SA-403 WP 316L	V-1264-70_SA403_GRWP316L-REV-01
4	SA-193 GR B7M	V-1264-70_SA193B7M_STUDS-REV-0
5	SA-194 GR 2HM	V-1264-70_SA1942HM_NUTS-REV-0

9. EXTERNAL SURFACE PREPARATION AND PAINTING SHALL BE AS PER A8KM-PP-000-500520-A AND APPROVED PROCEDURE PAINTING PROCEDURE (EN207122-ANUP-9V3-00015)

FABRICATION
1. ALL DIMENSIONS ARE IN ft-in (mm) UNLESS NOTED OTHERWISE.
2. ALL THICKNESSES SPECIFIED ON THE DRAWING ARE MINIMUM AFTER FORMING AND MACHINING.
3. ROLLING OF PLATES SHALL BE IN LONGITUDINAL DIRECTION OF PLATES.
4. ALL SHARP EDGES AND CORNERS SHALL BE ROUNDED OFF TO SMOOTH RADIUS.
5. RAW MATERIAL IDENTIFICATION SHALL BE CARRIED OUT AS PER APPROVED QAP.
6. WELDING TO BE DONE AS PER THE A8KM-PP-000-500550-A APPROVED WELDING PROCEDURE AND WELD TEST PLAN.
7. ALL BOLT HOLES OF THE NOZZLE FLANGE SHALL STRADDLE CENTERLINE OF THE EQUIPMENT.
8. ALL MACHINED SURFACES, SUCH AS FLANGE FACES, THREADED BOLT HOLES, THREADS, ETC. SHALL BE PROTECTED DURING THE HEAT TREATMENT.
9. ALL ATTACHMENTS DIRECTLY WELDED TO PRESSURE PARTS OF EQUIPMENT SHALL BE OF SAME MATERIAL AS THAT OF PRESSURE PART.
10. NOZZLES SHALL BE LOCATED SO THAT THE NOZZLE, NOZZLE TO VESSEL WELD, AND NOZZLE REINFORCEMENT ARE AT LEAST 2" (50 MM) FROM ALL PRESSURE CONTAINING SHELL AND HEAD WELDS. IF INTERSECTING OR COVERING PRESSURE CONTAINING WELDS CANNOT BE AVOIDED, THE NOZZLE SHALL BE FULLY REINFORCED AND LOW STRESS WELDING DETAILS USED (E.G., GRIND FILLETS TO A SMOOTH CONCAVE RADIUS). PRESSURE CONTAINING WELDS BENEAT REINFORCEMENT SHALL BE GROUND SMOOTH AND FLUSH WITH THE SHELL SURFACE. ALL PRESSURE CONTAINING WELDS SHALL BE 100 PERCENT RADIOGRAPHED AFTER FORMING AND NOZZLE INSTALLATION BUT BEFORE REINFORCING PAD INSTALLATION TO A MINIMUM OF 6 INCHES (150 MM) BEYOND THE NOZZLE TO VESSEL WELD OR THE LIMITS OF THE REINFORCING PAD.
11. THE FLATNESS TOLERANCE OF THE GASKET SEATING SURFACES OF SHELL BODY FLANGES SHALL BE IN ACCORDANCE WITH THE GASKET MANUFACTURER'S RECOMMENDATIONS OR THE TOLERANCE INDICATED IN ASME PCC-1 APPENDIX D, WHICHEVER IS MORE STRINGENT.FLATNESS CHECK SHALL BE PERFORMED AFTER COMPLETING ALL WELDS.
12. VESSEL TOLERANCES SHALL BE AS PER A8KM-PP-000-50801-A

INSPECTION AND TESTING
1. ALL PRESSURE BEARING BUTT WELD JOINTS SHALL BE 100% RT AS PER UW-11(a).
2. 100 % MT/PT SHALL BE PERFORMED FOR ALL WELDS.
3. WELDS JOINING NON-PRESSURE CONTAININIG COMPONENTS TO PRESSURE CONTAINING COMPONENTS SHALL BE 100% LIQUID PENETRANT OR MAGNETIC PARTICLE EXAMINED (AFTER PWHT, WHEN PWHT IS REQUIRED). THIS APPLIES TO PERMANENT AND NON-PERMANENT (E.G., LIFTING LUGS, TRUNIONS, ETC.) ATTACHMENTS ON THE INSIDE AND OUTSIDE OF THE VESSEL.
4. WHEN TEMPORARY ATTACHMENTS ARE REMOVED, THE AREA SHALL BE GROUND FLUSH WITH THE SURROUNDING SHELL SURFACE AND LIQUID PENETRANT OR MAGNETIC PARTICLE EXAMINED.
5. APPLICABLE NDE AND INSPECTION SHALL BE AS PER APPROVED PROCEDURES
6. ALL TEMPORARY ATTACHMENTS SHALL BE REMOVED BEFORE HYDROSTATIC TESTING.
7. TEMPORARY ATTACHMENTS SHALL BE REMOVED FLUSH WITH THE VESSEL SHELL AND NONDESTRUCTIVELY EXAMINED [I.E., MAGNETIC PARTICLE EXAMINATIONOR DYE PENETRANT EXAMINATION (PT)], IN ADDITION TO VISUAL EXAMINATION, TO ENSURE NO CRACKS HAVE BEEN GENERATED.

HYDRO TEST
1. DELETED.
2. PRESSURE TESTING SHALL BE COMPLETED BEFORE PRIMERS, PAINT, OR OTHER COATINGS ARE APPLIED.
3. THE HYDROSTATIC TEST MEDIUM SHALL BE CLEAN, FRESH, POTABLE WATER.
4. THE WELDS OF WELDED ATTACHMENTS PROVIDED WITH VENT HOLES (E.G, REINFORCING PADS, SLIPON FLANGES) SHALL BE LEAK TESTED USING 15PSIG (1 KG/CM2 (G)) PNEUMATIC PRESSURE AND A BUBBLE FORMING SOLUTION PRIOR TO POSTWELD HEAT TREATMENT AND FINAL HYDROSTATIC TEST.
5. THE VESSEL SHALL BE DRAINED AND THOROUGHLY DRIED IMMEDIATELY UPON THE COMPLETION OF PRESSURE TESTING. THE PROCEDURE FOR DRAINING THE TEST FLUID SHALL PREVENT DEVELOPMENT OF VACUUM PRESSURE WITHIN THE VESSEL OR ITS INTERNALS. THE PROCEDURE SHALL PREVENT DAMAGE TO OR DISLOCATION OF THE INTERNALS.
6. THE HYDROSTATIC TEST PRESSURE SHALL BE HELD FOR AT LEAST 1 HR.
7. TEST WATER SHALL NOT BE IN CONTACT WITH AUSTENITIC STAINLESS STEEL FOR GREATER THAN 72 HOURS UNLESS TREATED WITH AN APPROPRIATE BIOCIDE.
8. VESSELS OR COMPONENTS MADE OF AUSTENITIC STAINLESS STEEL MATERIALS SHALL BE PERFORMED WITH WATER CONTAINING A MAXIMUM OF 50 PPM CHLORIDE.
9. THE INTERIOR OF THE VESSEL SHALL BE CLEANED IN ACCORDANCE WITHSECTION 4.6.1.2 OF A8KM-PP-000-50801-A & APPROVED CLEANING PROCEDURE

TRANSPORTATION
1. EQUIPMENT SHALL BE PURGED WITH NITROGEN AT 5 psig (G) PRESSURE.
2. ADDITIONAL INDICATIONS SUCH AS NORTH/SOUTH/EAST/WEST ALONG WITH CENTER OF GRAVITY
3. SHALL BE CLEARLY MARKED VESSELS SHALL BE NITROGEN PURGED, FILLED AND HAVE BLIND FLANGES, SERVICE GASKETS, AND FULL BOLTING ON ALL NOZZLES. VENDOR SHALL PROVIDE SPARE DRY NITROGEN BOTTLE.FOR ADDITIONAL REQUIREMENT PLEASE REFER PROJECT SPECIFICATIONA8KM-PP-000-50801-A SECTION 4.6.3 F. 1. I.
4. VERTICAL VESSELS ARE TO BE MARKED ON THE BASE AND FIRST ONE FOOT OF SKIRT, INDICATING THE NORTH, SOUTH, EAST, AND WEST COORDINATES. THE COORDINATES SHALL BE INDICATED WITH A PAINTED LINE AND LETTER FOR EACH, ACCORDING TO THE ORIENTATION SHOWN ON THE VESSEL DRAWINGS.
5. THE CENTER OF GRAVITY SHALL BE MARKED ON ALL VERTICAL VESSELS BY PAINTING A CONTINUOUS 3 INCH WIDE CIRCUMFERENTIAL STRIPE. THE LETTERS CG AND SHIPPING WEIGHT IN TONS SHALL BE PAINTED AT 2 LOCATIONS DIAMETRICALLY OPPOSITE AND ADJACENT TO THE STRIPE. THE LOCATION OF THE CENTER OF GRAVITY SPECIFIED ON THE VESSEL FABRICATION DRAWINGS IS THAT OF THE VESSEL AS FABRICATED
6. VESSELS OR SECTION OF VESSELS SHALL BE CLEARLY IDENTIFIED BY PAINTING OR DYE STENCILING THE PO NUMBER AND THE VESSEL EQUIPMENT NUMBER IN A CONSPICUOUS LOCATION ON THE SHELL HEAD OR SUPPORT.

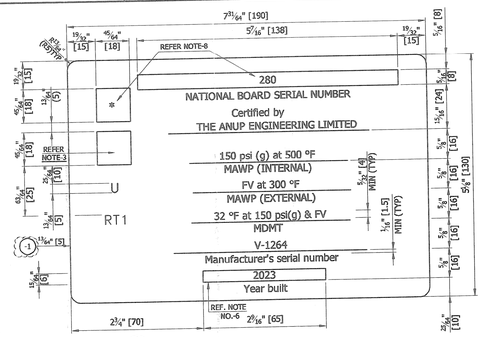

018 DETAIL OF ASME NAME PLATE △

NOTES:-
1) ALL DIMENSIONS ARE IN mm UNLESS OTHERWISE SHOWN.
2) HEIGHT OF CHARACTERS SHALL BE AT LEAST 4 mm & SHALL BE ENGRAVED IN A BLACK ENAMELED BACKGROUND. CHARACTERS SHALL BE EITHER INDENTED OR RAISED AT LEAST 0.1 mm & SHALL BE LEGIBLE & READABLE.
3) CERTIFICATION MARK(%) TO BE HARD STAMPED IN PRESENCE OF AI AFTER OBTAINING HIS AUTHORIZATION.
4) NAME PLATE SHALL BE RIVETED TO BRACKET AS PER DRAWING.
5) BRACKET WITH NAME PLATE TO BE LOCATED AS MARKED IN DRG.
6) YEAR BUILT SHALL CORRESPOND TO DATE OF HYDROSTATIC TESTING & SHALL BE HARD PUNCHED AFTER SUCCESSFUL COMPLETION OF HYDRO TEST.
7) ALL HARD STAMPED FACE (BLOCK) SHALL BE RAISED FACE.
8) NATIONAL BOARD SYMBOL AND NATIONAL BOARD SERIAL NUMBER AS ADVISED BY HEAD-QUALITY SHALL BE HARD STAMPED IN PRESENCE OF AI AFTER OBTAINING HIS AUTHORIZATION.

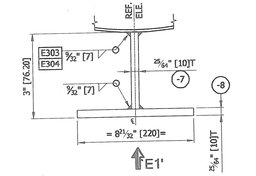

018 DETAIL OF NAME PL. BRACKET △

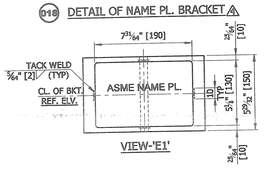

NOTE:
UNDERCUTTING OF SHELL SHALL BE AVOIDED WHEN WELDING BRACKET TO THE VESSEL

4	WELD JOINT NO.: E301 TO E304					
				SUB TOTAL OF WEIGHT (KG)	6	
4	-8	NAME PLATE BRACKET PLT.-2	1	SA 240 GR 316L	10T x 220W x 150 LG.	2.65
4	-7	NAME PLATE BRACKET PLT.-1	1	SA 240 GR 316L	10T x 66.2W x 150 LG.	0.8
4	-6	ASME DUPLICATE NAME PLATE	1	SS 304	5T x 130W x 190 LG	0.99
4	-5	RIVET	8	ALLUMINIUM	ø5 x 20 LG	-
	-4	NAME PLATE BRACKET PLT.-2	1	SA 240 GR 316L	10T x 220W x 284 LG.	3
	-3	NAME PLATE BRACKET PLT.-1	1	SA 240 GR 316L	10T x 66.2W x 284 LG.	1.02
	-2	MFG'S NAME PLATE	1	SS 304	5T x 110W x 200 LG	0.88
	-1	ASME NAME PLATE	1	SS 304	5T x 130W x 190 LG	0.99
	018	NAME PLATE ASSLY				

REV NO.	SR. NO.	DESCRIPTION	QTY/ ITEM	MATERIAL	SIZE	WT. (kg)	REMARK

BILL OF MATERIAL

APPLICABLE STANDARDS

SR. NO.	STD. NO.	DESCRIPTION	REV. NO.
1	A8KM-PP-000-53007-D	VESSEL NAMEPLATE BRACKET	0
2	A8KM-PP-000-53026-D	VESSEL VORTEX BREAKERS	0A
3	A8KM-PP-000-53008-D	VESSEL GROUNDING LUG	0
4	A8KM-PP-000-53021-D	VESSEL VERTICAL MANWAY DAVITS	0
5	A8KM-PP-000-53027-D	VESSEL INTERNAL RUNGS	0
6	A8KM-PP-000-530006-D	SKIRT OPENING VERTICAL VESSELS	0A
7	A8KM-PP-000-53007-D	VESSEL NAMEPLATE BRACKET	0
8	A8KM-PP-000-530001-D	MIST ELIMINATOR DETAILS	0A
9	A8KM-PP-000-530029-D	SKIRT ATTACHMENT	0A

REFERENCE SPECIFICATIONS

SR. NO.	SPEC. NO.	DESCRIPTION	REV. NO.
1	A8KM-PP-000-500550-A	WELDING/NDE REQUIREMENTS FOR EQUIPMENT	0A
2	A8KM-18-088-540321-A	MECHANICAL EQUIPMENT DATA SHEET FOR 18-X-261	0
3	A8KM-PP-000-500512-A	POSITIVE MATERIAL IDENTIFICATION (PMI)	0
4	A8KM-PP-000-500520-A	PAINTING	0D
5	A8KM-PP-000-50005-A	DESIGN OF LIFTING COMPONENTS FOR MECHANICAL EQUIPMENT	0
6	A8KM-PP-000-500540-A	GALVANIZING	0A
7	A8KM-PP-000-50801-A	DESIGN AND FABRICATION SPECIFICATION FOR VESSELS ASME CODE SECTION VIII, DIVISIONS 1 AND 2	0
8	A8KM-PP-000-50840-A	DESIGN AND FABRICATION SPECIFICATION FOR PRESSURE VESSEL INTERNALS	0

AS BUILT DRAWING

THE ANUP ENGG. LTD.

Reviewed 29/01/23 AI

REV. NO.	DATE	DESCRIPTION	BY	CHD.	APPD.
4	23-01-2023	AS BUILT DRAWING	GML	AAS	BMP
3	17-09-2022	DRAWING REVISED AS PER CLIENT COMMENT AS MARK △	VAP	JD	BMP
2	20-04-2022	DRAWING REVISED AS PER CLIENT COMMENT AS MARK △	VAP	KRK	DKB
1	01-01-2022	DRAWING REVISED AS PER CLIENT COMMENT AS MARK.	VAP	KRK	BMP
0	29-07-2021	ISSUED FOR APPROVAL	VAP	KRK	BMP

REVISIONS

EQUIPMENT OWNER
Air Products Manufacturing LLC

ENGINEERING & PROJECT MANAGEMENT
AIR PRODUCTS

CONTRACT NO :

THE ANUP ENGINEERING LTD.
AHMEDABAD

CLIENT:- WORLD ENERGY PARAMOUNT PARAMOUNT, CA
SHEET NO: 3 OF 4
REV: 4
P.O.NO. : 4505426369 DATE 09.07.2021
DRG. NO: V-1264-FAD-2021

DRN.	VAP
CHD.	-
APPD.	BMP
DATE	20-10-2021
SCALE	1 : 19
MFR'S SERIAL No.:	V-1264

18-D-272 ARG2 AMINE REGEN REFLUX DRUM
H2S RECOVERY UNIT

ITEM NO. 18-D-272

NAME PLATE AND GENERAL NOTES DETAILS DRAWING

QTY ONE

AP DOCUMENT NUMBER EN207122-ANUP-9V3-00028
SHEET NO. 3 OF 4
REV. 4
A1

MFR'S SERIAL NO. : V-1264

THIS DRAWING MUST NOT WITHOUT OUR CONSENT BE SHOWN TO ANY PERSON OUTSIDE THE RECIPIENT EMPLOY OR BE COPIED OR USED FOR THE PURPOSE OF MANUFACTURING ANY ARTICLE SHOWN IN THE DRAWING AND THE COPYRIGHT IN THE DRAWING SHALL BE AND REMAIN OUR SOLE PROPERTY. THIS DRAWING TOGETHER WITH ANY COPIES MADE BY THE RECIPIENT SHALL BE RETURNED ON DEMAND TO US.

ORIGINAL FRAME SIZE 841 X 594 mm