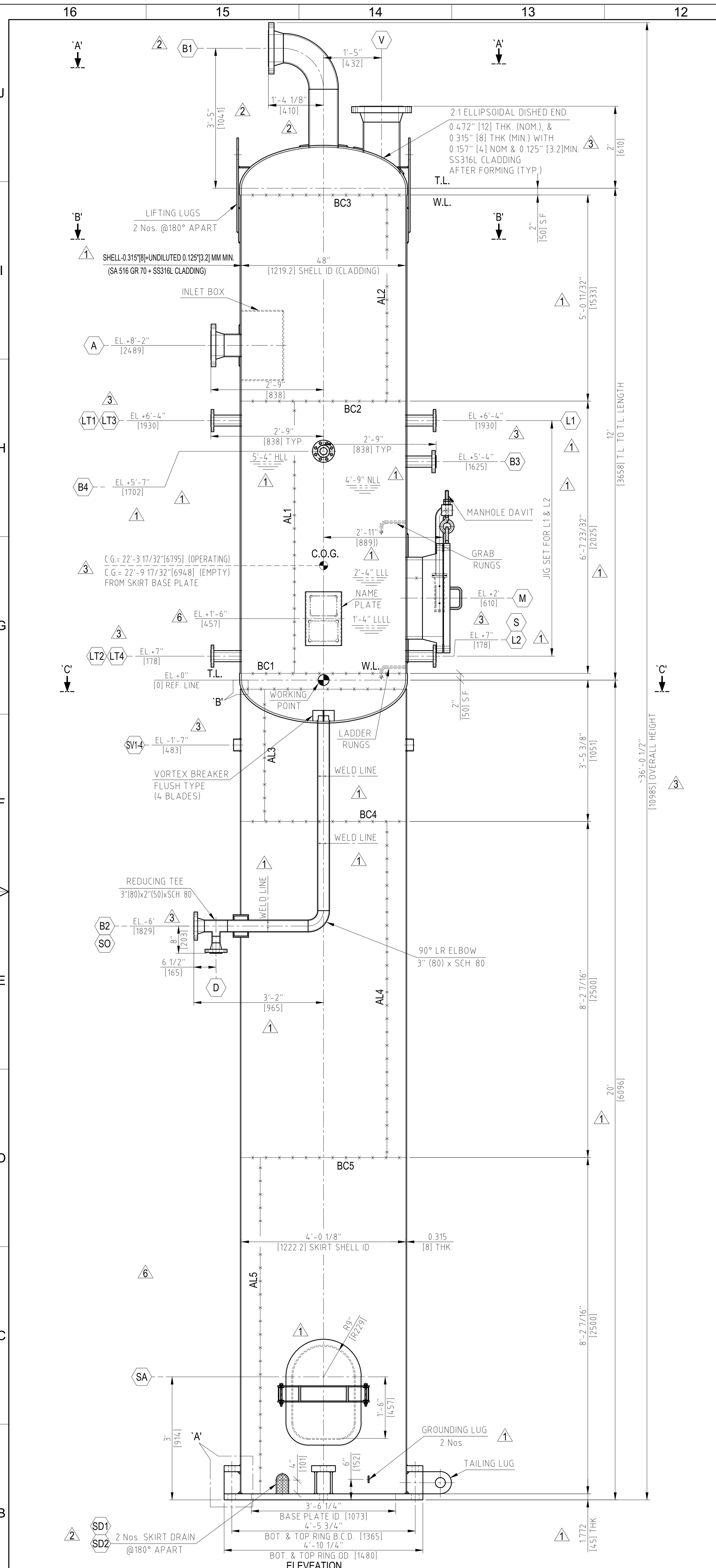

ELEVATION

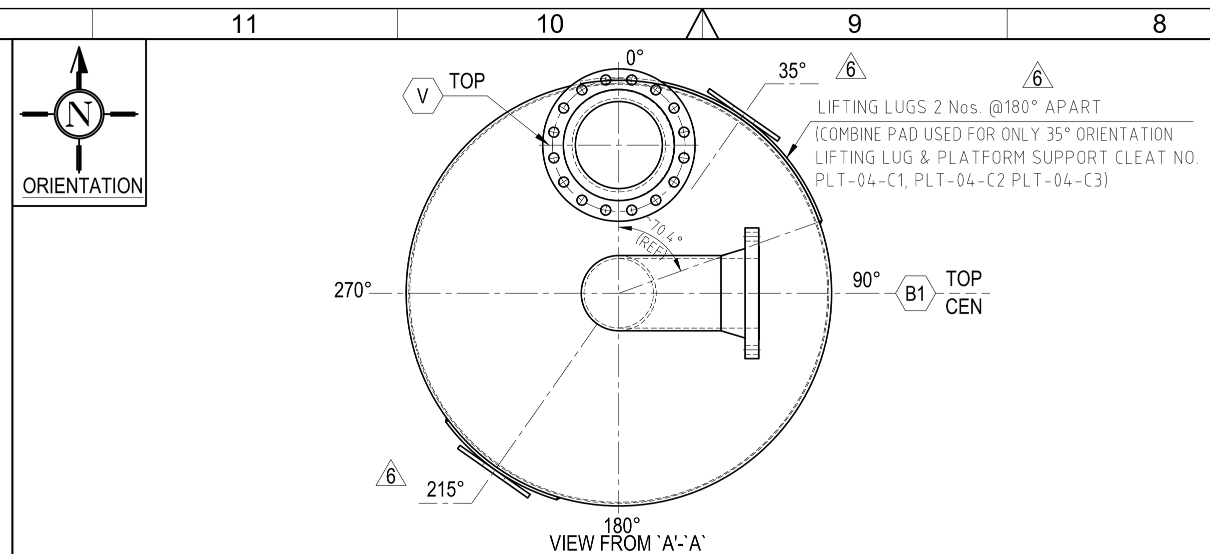

VIEW FROM `A'-`A'

NOZZLE ORIENTATION VIEW

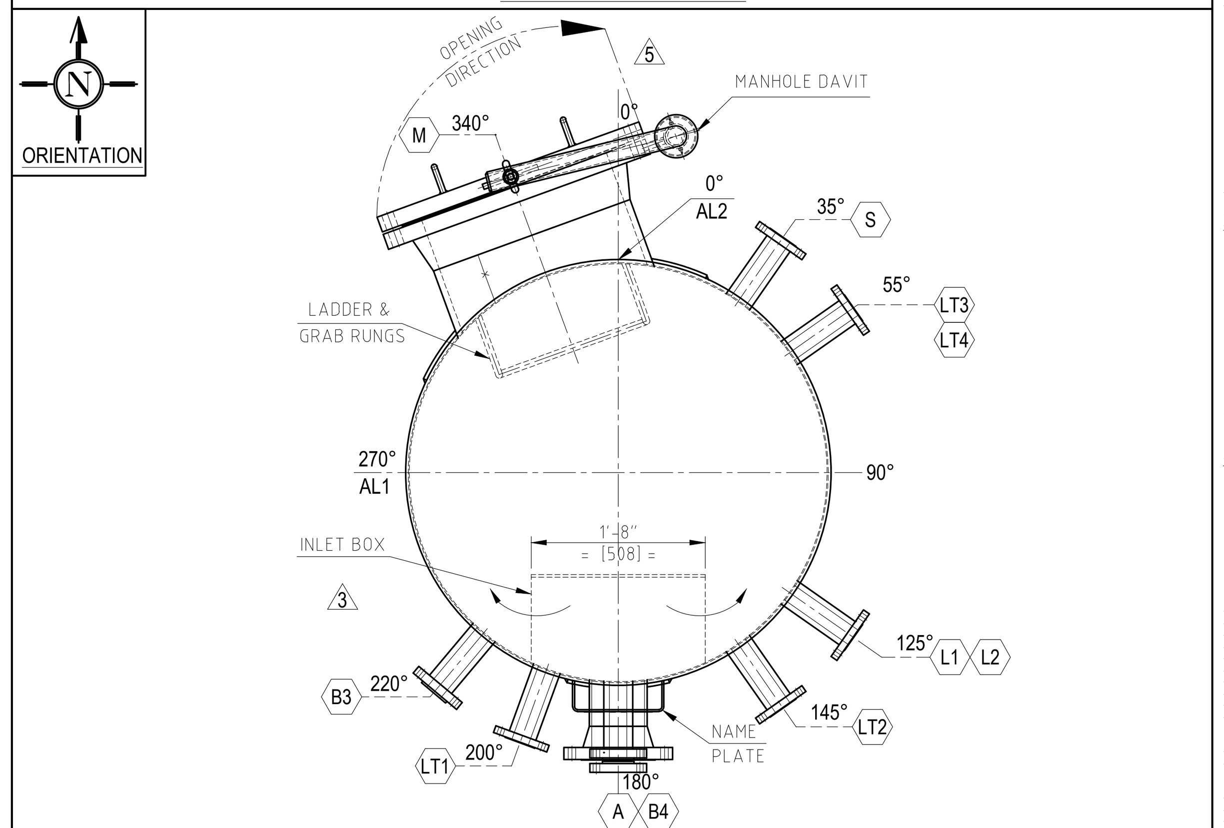

VIEW FROM `B'-`B'

NOZZLE ORIENTATION VIEW

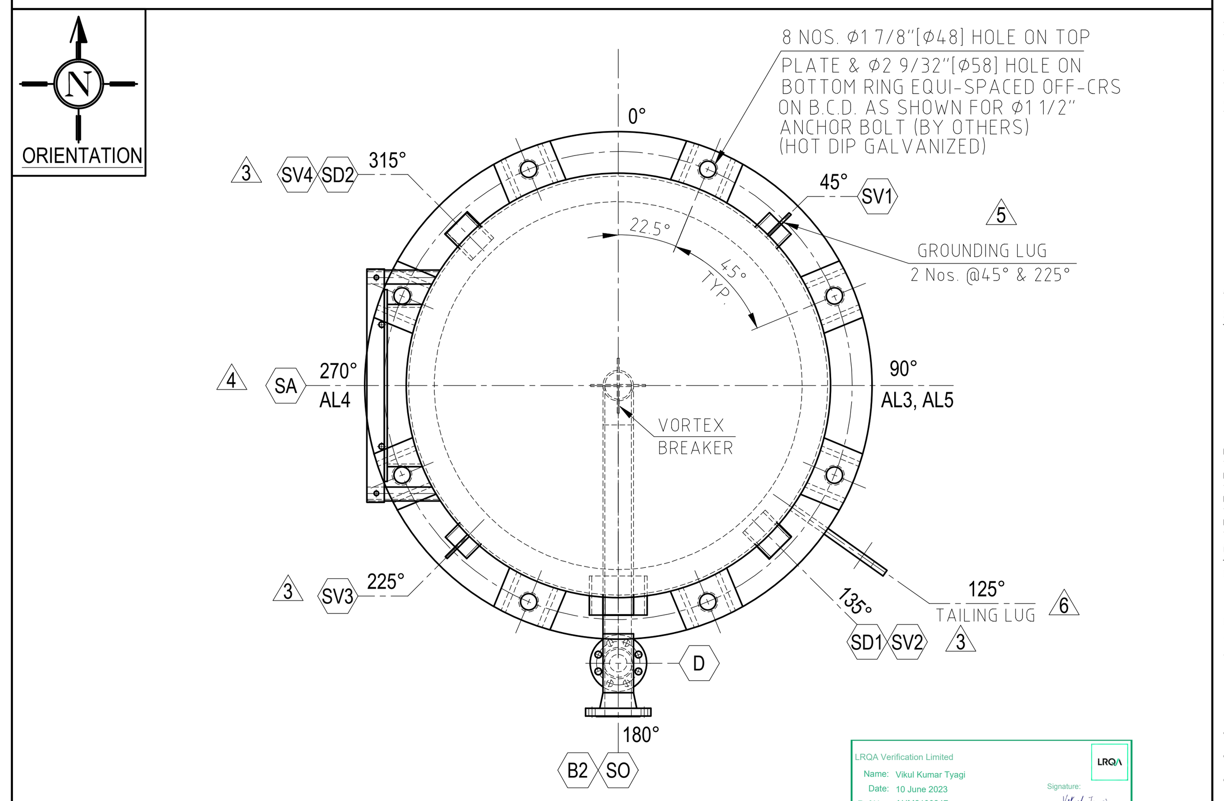

VIEW FROM `C'-`C'

NOZZLE ORIENTATION VIEW

1. GENERAL NOTES :

1.1 ALL DIMENSIONS ARE IN INCHES /(MM), UNLESS OTHERWISE SPECIFIED.
1.2 THE BOLT HOLES OF THE NOZZLE AND GIRTH FLANGES SHALL ALWAYS STRADDLE THE PRINCIPAL CENTER LINE OF THE VESSEL OR THEIR PARALLEL LINES.
1.3 FOR NOZZLES LOCATED ON THE SHELL, PROJECTIONS ARE GIVEN FROM THE EQUIPMENT CENTER LINE TO FLANGE FACE AND FOR NOZZLES LOCATED ON HEADS, PROJECTIONS ARE SHOWN FROM HEAD TL TO FLANGE FACE, UNLESS OTHERWISE SHOWN
1.4 FLANGE DIMENSIONS FOR NOZZLES UPTO 24" SHALL BE AS PER ASME B16.5. FOR NOZZLES LARGER THAN 24", FLANGE DIMENSIONS SHALL BE AS PER ASME B16.47 SERIES A, UNLESS OTHERWISE SPECIFIED.
1.5 GASKET SEATING SURFACE OF BODY FLANGE/NOZZLE FLANGE SHALL HAVE FINISH OF RA 125- 250 MICRO-INCH FOR SPWD GASKETS (REFER B16.5 PARA. 6.4..5.3)
1.6 NOZZLE NECKS UP TO NPS 12 SHOULD BE FROM SEAMLESS PIPE. NOZZLE GRATER THAN NPS 12 SHOULD BE FABRICATED FROM PLATE.
1.7 INSIDE CORNERS OF NOZZLE NECKS SHALL BE ROUNDED OFF TO A RADIUS OF 1/8" (3 MM) UNLESS OTHERWISE SHOWN. ALL OTHER SHARP CORNERS SHALL BE ROUNDED OFF TO A SUITABLE RADIUS.
1.8 UNLESS OTHERWISE SPECIFIED ALL NOZZLES SHALL BE FLUSH WITH THE INSIDE SURFACE.
1.9 STUDS BOLTS AND NUTS UP TO 1" DIAMETER SHALL BE THREADED AS PER UNC 2A/2B. ABOVE 1" FASTENERS SHALL BE 8 UN 2A/2B.
1.10 STUDS SHALL BE THREADED TO FULL LENGTH.
1.11 STUDS SHALL EXTEND A MINIMUM OF 8 MM BEYOND EACH NUT.
1.12 STUD BOLTS SHALL BE PROVIDED WITH TWO HEAVY SERIES HEXAGONAL NUTS.
1.13 UNCOATED BOLTS AND NUTS SHALL BE COATED WITH A SUITABLE THREAD LUBRICANT TO PREVENT CORROSION DURING TRANSPORTATION AND STORAGE. THE LUBRICANT SHALL BE EASILY REMOVABLE WITH MINERAL SPIRITS OR A SOLVENT.
1.14 NECESSARY CARE TO BE TAKEN DURING HANDLING,WELDING AND FABRICATION OF VESSEL TO AVOID SCRATCHES,PIN HOLES, BLOW HOLES, BENT MARK FROM INSIDE/OUTSIDE OF VESSEL.
1.15 PADS OF INTERNAL & EXTERNAL ATTACHMENT SHALL HAVE ROUNDED CORNERS OF MIN. RADIUS 1"[25] MM.
1.16 PRESSURE RELIEF DEVICES ARE NOT IN PRAJ SCOPE OF SUPPLY. DESIGN FOR OVER PRESSURE PROTECTION AS PER UG-125 IS IN CLIENT SCOPE
1.17 MANWAY M OF NPS 24 (~554 mm ID) CAN BE USED AS INSPECTION OPENING AS PER UG-46(a) △2
1.18 NOZZLE D OF SIZE NPS 2 CAN BE USED AS DRAIN AS PER UG-25
1.19 TOLERANCES SHALL BE IN ACCORDANCE WITH ASME SEC VIII DIV.1 AND AS PER FIG 2 OF SPECIFICATION A8KM-PP-000-50801-A_0
1.20 THE OUT OF ROUNDNESS FOR SHELL SHALL MEASURED WITH THE FOLLOWING TEMPLATE

ITEM	'R' inch [mm]	'L' inch [mm]	DEVIATION inch [mm]
DISHED ENDS	TO SUIT 2:1 ELLIPSOIDAL PROFILE	21.81" [554]	±0.22 [5.6]
MAIN SHELL	24" [610]	29.33" [845]	±0.263 [6.3]
NOZZLE M	10.9" [277]	8.4" [213]	±0.142 [3.6] △5

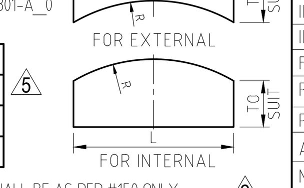

1.21 FLANGE RATING WERE REVISED TO #300 TO MEET UG-44(b) REQUIREMENTS . PIPING LOADS FOR THESE NOZZLES SHALL BE AS PER #150 ONLY △2
1.22 FLANGE RATING WERE REVISED TO #600 TO MEET UG-44(b) REQUIREMENTS . PIPING LOADS FOR THESE NOZZLES SHALL BE AS PER #300 ONLY

2. MATERIAL:

2.1 ALL PRESSURE BEARING COMPONENTS SHALL CONFORM TO ASME SECTION II PART A (ED.2019) AND SUPPLIED WITH TEST CERTIFICATE ACCORDING TO EN 10204:3.1/3.2. AS PER SPEC-ENG-MQ042 OTHER MATERIAL/NON PRESSURE PARTS SHALL HAVE EN10204 TYPE 3.1 CERTIFICATION EXCEPT SPECIFIC APPROVAL FROM CLIENT △3
2.2 ALL CARBON STEEL PLATE AND FORGING MATERIAL SHOULD BE IN NORMALIZED CONDITION. △4
2.3 PLATE HAVING THICKNESS 12MM AND ABOVE SHALL BE ULTRASONICALLY EXAMINED IN ACCORDANCE WITH SA-578.
2.4 ALL FORGINGS SHALL BE EXAMINED ULTRASONICALLY IN ACCORDANCE WITH SA-388
2.5 PLATES, PIPES & FITTINGS ARE EXEMPTED FROM IMPACT AS PER UG-20 (f). FLANGES ARE EXEMPTED FROM IMPACT TESTED AS PER UCS-66 (c), FITTINGS ARE EXEMPTED FROM IMPACT TEST AS PER UCS-66 (a). FASTENERS ARE EXEMPTED FROM IMPACT TEST AS PER NOTE (c) OF FIG.-UCS-66 △2
2.6 SHELL AND HEAD CLADDING MATERIAL SHALL BE 1/8"[3.2mm] MIN. THK. INTEGRALLY BONDED CLAD PER SA-264 (SA-516-70 + SA-240-316L). INTEGRALLY CLAD PLATE SHALL BE EXAMINED IN ACCORDANCE WITH SA-578 LEVEL C. △2

3. WELDING:

3.1 ALL WELDING SHALL BE CARRIED OUT AS PER APPROVED WELD PROCEDURE..
3.2 ALL SHELL AND HEAD JOINTS SHALL BE FULL PENETRATION WELDS WITH BACK CHIPPING TO SOUND METAL AND RE WELDED FROM OTHER SIDE. FOR THOSE JOINTS WHICH ARE INACCESSIBLE FOR BACK CHIPPING, THE ROOT RUN SHALL BE CARRIED OUT BY GTAW WELD..
3.3 ALL NOZZLE TO SHELL WELDS SHALL BE 100% PENETRATION GROOVE WELDS.
3.4 WELDING OF VESSEL INTERNALS ATTACHED TO A PRESSURE BOUNDARY COMPONENT SHALL BE CONTINUOUS ON ALL SURFACES TO ELIMINATE CORROSION POCKETS.
3.5 THE SKIRT ATTACHMENT WELD SHALL HAVE COMPLETE FUSION FOR THE ENTIRE LENGTH OF THE WELD AND SHALL BE FREE FROM UNDERCUT, OVERLAP, OR ABRUPT RIDGES OR VALLEYS.
3.6 ALL TACK WELDS SHALL BE DONE BY QUALIFIED WELDER ONLY.
3.7 TEMPORARY ATTACHMENTS SHALL BE REMOVED FLUSH WITH THE VESSEL SHELL AND NONDESTRUCTIVELY EXAMINED [I.E., MAGNETIC PARTICLE EXAMINATION (MT) OR DYE PENETRANT.
3.8 ALL TEMPORARY ATTACHMENTS SHALL BE REMOVED BEFORE HYDROSTATIC TESTING
3.9 ALL SURFACES DAMAGED DURING FABRICATION SHALL BE TREATED FOR RESTORING THICKNESS AS PER UW-42.
3.10 ALL WELDS, BOTH PRESSURE CONTAINING AND WELDS TO PRESSURE PARTS, SHALL HAVE A SMOOTH CONTOUR. SMOOTH MEANS THAT THE CONTOUR OF WELD MUST MERGE SMOOTHLY INTO THE BASE METAL WITH NO SHARP CHANGE IN METAL SURFACE. THERE SHALL BE NO SHARP RIDGES OR HOLLOWS.
3.11 ALL L-SEAM /C-SEAM WELDING SHALL BE PREFERABLY BE CARRIED OUT USING SAW ONLY. SMAW/GTAW CAN BE EMPLOYED ONLY IF SAW IS NOT FEASIBLE. ANYWAY SMAW/ GTAW WELDING OR REPAIR SHALL BE CARRIED OUT USING WEAVING TECHNIQUE WITH SMOOTH FINISH AND WITHOUT ANY DISCONTINUITIES PEAK AND VALLEYS.
3.12 ALL WELDS SHALL BE SUFFICIENTLY CLEANED AND FREE OF SCALE OR PAINT BEFORE PRESSURE TESTING TO PERMIT PROPER EXAMINATION FOR DEFECTS.
3.13 PLATE LAYOUTS SHALL BE ARRANGED SO THAT LONGITUDINAL AND CIRCUMFERENTIAL WELD SEAMS CLEAR ALL NOZZLES, MANWAYS, AND THEIR REINFORCING PADS BY 2 INCHES (50 MM) MINIMUM, MEASURED FROM WELD EDGE TO WELD EDGE.. WHEN INTERFERENCES ARE UNAVOIDABLE ON A SEAM JOINT, GROUND FLUSH WELD JOINT AND CARRY OUT FULL RADIOGRAPHIC EXAMINATION OF THE WELD JOINTS FOR A MINIMUM LENGTH OF TWICE THE OVERLAPPED LENGTH. △1
3.14 RADIOGRAPHIC EXAMINATION OF WELD SEAMS IS NOT REQUIRED IF SINGLE PLATE EDGE-TYPE ATTACHMENTS (E.G., TRAY SUPPORT RINGS, DOWNCOMER BOLTING BARS, STIFFENING RINGS, INSULATION SUPPORT RINGS, LADDER, PLATFORM, OR PIPE SUPPORT CLIPS) CROSS WELD SEAMS. △1
3.15 LONGITUDINAL SEAM OFFSET SHALL BE THE GREATER OF FIVE TIMES THE PLATE THICKNESS OR 150 MM (6 IN).

4. RADIOGRAPHIC EXAMINATION :

4.1 NDE OF WELDS SHALL BE PERFORMED AS PER APPROVED QUALITY PLAN.
4.2 FOR PRESSURE PARTS BASE MATERIAL :-
a) ALL LONG SEAMS AND CIR. SEAMS IN THE SHELL SHALL BE SPOT RADIOGRAPHED AS PER UW -11 (b). △3
b) DELETED. △2
c) DISHED END TO SHELL JOINT SHOULD BE ADDITIONALLY SPOT RADIOGRAPHED TO MEET REQUIREMENTS OF UW-11(a)(5)(b).
d) ALL NOZZLE PIPE TO FLANGE JOINTS THAT EXCEEDS NPS 10 OR 1-1/8" (29) WALL THICKNESS SHALL BE SPOT RADIOGRAPHED △3
e) LONG SEAMS OF PLATE FABRICATED NOZZLES SHALL BE FULLY RADIOGRAPHED.
4.3 AUTOMATED ULTRASONIC TESTING CAN BE PERFORM IN LIEU OF RT AS PER UW-51.

5. PENETRANT TEST / MPT PT/MPT SHALL BE AS PER APPROVED QAP : THE FOLLOWING SHALL BE EXAMINED BY THE PT/MPT METHOD.

5.1 ROOT RUN , BACK CHIP AND FINAL RUN OF WELDS (WHERE BACK CHIP IS APPLICABLE , PT/MPT AFTER ROOT RUN IS NOT NECESSARY ; HOWEVER PT/MPT WILL BE PERFORMED AFTER BACK CHIPPING)
5.2 OUTSIDE AND INSIDE SURFACES OF DISHED END STRAIGHT FACE & KNUCKLE ZONE AFTER COLD FORMING..
5.3 ALL NOZZLE TO SHELL WELDS SHALL BE DP OR MP CHECKED AT ROOT RUN AND FINAL WELD.
5.4 ALL WELDING EDGES SHALL BE CHECKED BY MP EXAMINATION FOR DETECTION OF CRACKS, LAMINATIONS OR SEGREGATIONS.
5.5 WELDS ATTACHING VERTICAL VESSEL SUPPORTS (E.G., SKIRTS, LUGS, LEGS, ETC.)
5.6 WELDS ATTACHING VESSEL LIFTING (I.E., ERECTION) LUGS
5.7 WELDS ATTACHING MANWAY DAVITS
5.8 LOAD BEARING APPURTENANCES

6. AIR TEST:

6.1 REINFORCING PAD ATTACHMENT WELDS AND ACCESSIBLE SURFACES OF INSIDE NOZZLE TO VESSEL WALL WELDS SHALL BE TESTED FOR THE ABSENCE OF LEAKS WITH A GAUGE PRESSURE OF 15 PSIG (100 KPA) DRY AIR OR NITROGEN AND BUBBLE FORMING SOLUTION. THIS TEST SHALL BE PERFORMED BEFORE THE FINAL HYDROSTATIC TEST
6.2 HOLES IN REINFORCING PADS SHALL BE PLUGGED WITH ROOM TEMPERATURE VULCANIZING (RTV) SILICONE SEALER OR RUST PREVENTATIVE GREASE THAT IS COMPATIBLE WITH THE BASE MATERIAL.

7. TESTING :

7.1 HYDRO TEST WILL BE CARRIED OUT IN HORIZONTAL POSITION AT SHOP.
7.2 HYDROTEST SHOULD BE CARRIED OUT AS PER UG-99(C). △2
7.3 MINIMUM METAL TEMPERATURE DURING HYDROTEST SHALL BE AT LEAST 30 DEG F (17 DEG C) ABOVE THE MINIMUM DESIGN METAL TEMPERATURE OF THE VESSEL.
7.4 ALL BOLTING AND WASHERS, USED FOR TESTING, SHALL BE PROPERLY LUBRICATED FOR ASSEMBLY BEFORE THE INITIAL PRESSURE TEST.
7.5 BEFORE APPLICATION OF THE TEST PRESSURE, THE TEST WATER AND THE VESSEL MATERIAL SHALL BE PERMITTED TO EQUALIZE TO APPROXIMATELY THE SAME TEMPERATURE. △2
7.6 FOR CS + SS CLADDED EQUIPMENTS , WATER USED FOR THE HYDROTESTING WOULD BE POTABLE QUALITY (LESS THAN 50 PPM) THE TEST PRESSURE SHALL BE HELD FOR A MINIMUM PERIOD OF ONE HOUR.
7.7 AFTER COMPLETION OF THE HYDROSTATIC TEST, THE VESSEL SHALL BE DRAINED, DRIED INCLUDING DRYING INTERNALS, AND CLOSED AS QUICKLY AS PRACTICABLE.
7.8 AFTER COMPLETION OF ALL TESTING AND INSPECTION, THE TEST WATER SHALL BE COMPLETELY REMOVED BY DRAINING AND MOPPING, OR ALL WETTED SURFACES SHALL BE FLUSHED WITH COLD CONDENSATE OR DEMINERALIZED WATER.
7.9 TEMPORARY CS PLATE BLIND FLANGES SHALL BE USED FOR NOZZLES FLANGES DURING HYDROTEST WITH ORIGINAL SIZE BOLTS,NUTS & WASHER.
7.10 TEST GASKETS SHALL BE OF THE SAME TYPE AND MATERIAL AS THE SERVICE GASKETS.
7.11 IN ANY CASE HYDROTEST PRESSURE SHOULD NOT EXCEED 360 PSI (g) (25.31 KG/CM2(g)). △2
7.12 WELDING, BURNING OR GRINDING, INCLUDING COSMETIC GRINDING OF PRESSURE RETAINING WELDS, SHALL NOT BE PERFORMED ON VESSELS THAT HAVE BEEN PRESSURE TESTED UNLESS APPROVED BY PURCHASER. THIS INCLUDES BUT SHALL NOT BE LIMITED TO WELDS FOR SHIPPING ATTACHMENTS, REFRACTORY OR INSULATION CLIPS, STIFFENERS, SPIDERS, OR GRINDING FOR SURFACE PREPARATION.
7.13 THE INTERIOR OF THE VESSEL SHALL BE CLEANED IN ACCORDANCE WITH SECTION 4.6.1.2 OF A8KM-PP-000-50801-A △2

8. SURFACE PREPARATION & PAINTING:

8.1 SURFACE SHALL BE CLEAN & FREE FROM RUST,OIL,DIRT,SCALE,OXIDES AND OTHER FOREIGN MATERIAL DETRIMENTAL TO WELDING.
8.2 NO SURFACE SHALL BE PAINTED BEFORE COMPLETION OF THE INSPECTION NDE AND HYDROTEST.
8.3 ALL TEMPORARY SHIPPING COMPONENTS, INCLUDING BOLTING, COVERS, CLIPS, SUPPORTS, BRACES, ETC., SHALL BE PAINTED BRIGHT ORANGE OR BRIGHT YELLOW TO FACILITATE IDENTIFICATION FOR REMOVAL IN THE FIELD. △2
8.4 PAINTING SHALL BE CARRIED OUT AS PER APPROVED PAINT PROCEDURE (EN207122-PRAJ-9V3-00007) & BELOW TABLE

TAG NO	EXTERNAL SURFACE	SURFACE PREPARATION	PAINT SYSTEM	PRIMER COAT (DFT)	INTERMEDITE Coat (DFT)	FINISH COAT (DFT)	FINAL SHADE	FINAL DFT
18-D-271	C.S (VESSEL & SKIRTS)	SSPC SP-10	1	INTERZINC 22 (2.5-4 MILS) (65-100μm)	INTERGARD 475 (4-6 MILS) (100-150μm)	INTERTHANE 990 (2-3 MILS) (50-75μm)	LIGHT GREY (RAL 7035)	215- 325 μm (8.5-13 mils)

9. IDENTIFICATION & MARKING :

9.1 THE TANGENT LINE SHALL BE PUNCH-MARKED INSIDE AND OUTSIDE OF THE VESSEL AT 0, 90, 180, AND 270 ANGLE POSITION POINTS.
9.2 ALL VESSELS USING A POSITIVE PRESSURE INERT INTERNAL ATMOSPHERE SHALL HAVE THE FOLLOWING NOTICE PAINTED ON TWO SIDES OF THE SHELL AND INSULATION COVERING, IF PRESENT, IN THREE-INCH (75MM) HIGH LETTERS VISIBLE IN THE SHIPPING POSITION FROM GRADE. "CAUTION - UNDER INERT ATMOSPHERE - DO NOT OPEN WITHOUT PROPER PRECAUTIONS"
9.3 ALL VESSELS SHALL HAVE THEIR CENTERS OF GRAVITY (EMPTY CONDITION AS PER GA DRAWING) MARKED. THE LETTERS CG AND SHIPPING WEIGHT IN lbs SHALL BE PAINTED AT 2 LOCATIONS DIAMETRICALLY OPPOSITE AND ADJACENT TO THE C.G. MARK. △6
9.4 VERTICAL VESSELS ARE TO BE MARKED ON THE BASE AND FIRST ONE FOOT OF SKIRT, INDICATING THE NORTH, SOUTH, EAST, AND WEST COORDINATES. THE COORDINATES SHALL BE INDICATED WITH A PAINTED LINE AND LETTER FOR EACH, ACCORDING TO THE ORIENTATION SHOWN ON THE BUYER VESSEL DRAWINGS. THE MARKINGS SHALL BE MADE ON THE SHELL NEAR THE BOTTOM TANGENT LINE IF THE VESSEL DOES NOT HAVE A SKIRT

10. SHIPPING:

△2
10.1 PREPARATION FOR SHIPPING SHALL BE IN ACCORDANCE WITH AP SPECIFICATIONS 4WGN - 10001.
10.2 ALL VESSEL OPENINGS SHALL BE CLOSED AND SEALED IMMEDIATELY AFTER COMPLETION OF CLEANING AND DRYING.
10.3 VESSELS WITH STAINLESS STEEL INTERNAL CLADDING SHALL BE NITROGEN PURGED, FILLED AND HAVE BLIND FLANGES, SERVICE GASKETS, AND FULL BOLTING ON ALL NOZZLES. SPARE DRY NITROGEN BOTTLE SHOULD BE PROVIDED FOR OVERSEA TRANSPORTATION. △2
10.4 VESSEL SHOULD BE SHRINK WRAPPED FOR SHIPMENT OVER OCEAN AND LAND.
10.5 ALL PARTS TO BE PROTECTED FROM DAMAGE AND CORROSION DURING STORAGE AT SITE FOR A POSSIBLE MAXIMUM TIME OF 12 MONTHS.
10.6 SPARE GASKETS AND BUILDING HARDWARE SHALL BE WRAPPED IN A WATERTIGHT BARRIER MATERIAL AND ENCLOSED IN PLYWOOD CONTAINERS.
10.7 MACHINED SURFACES, FLANGE FACES, THREADED SURFACES, AND OTHER FINISHED OR DELICATE PARTS SHALL BE WELL-GREASED AND PROTECTED AGAINST RUSTING AND DAMAGE DURING SHIPMENT.
10.8 THE OPENING IN THE SKIRT SHALL BE PROVIDED WITH TEMPORARY PIPE GUIDE OR SPIDER (WOOD "CHOCK") TO LOCATE THE PIPING DURING SHIPMENT. PERMANENT 'SPIDER' S ARE PROHIBITED.
10.9 EQUIPMENT ERECTION SHALL BE CONDUCTED IN SUCH A MANNER THAT THE LOADS IN THE LUG WEAK AXIS ARE MINIMAL, WITH A MAXIMUM OUT OF PLANE SLING ANGLE OF 3 DEGREES. A SPREADER BEAM OR A TWO-CRANE LIFT CAN BE USED DURING ERECTION TO SATISFY THIS REQUIREMENT △2
10.10 FOLLOWING NOTICE SHOULD BE PAINTED ON TWO SIDES OF THE SHELL IN 3" HIGH LETTERS VISIBLE IN SHIPPING POSITION FROM GRADE. "CAUTION - UNDER INERT ATMOSPHERE - DO NOT OPEN WITHOUT PROPER PRECAUTIONS"
10.11 EQUIPMENT SHALL BE FILLED WITH NITROGEN AT SLIGHTLY POSITIVE PRESSURE (7 PSIG (0.5 Kg/cm2 g) APPROX.) PRIOR TO DESPATCH. A DIAPHRAGM-TYPE PRESSURE GAUGE WITH FULL SCALE READING OF 1 BAR G (15 PSIG) SHALL BE PROVIDED TO MONITOR THE PURGE PRESSURE. A PRESSURIZATION CONNECTION (WITH SELF-SEALING OR MANUAL VALVE) SHALL BE PROVIDED △6
10.12 PLATFORM SUPPORT CLIP & LADDER CLIP HEX BOLT (BOM PART NO 505,509,513,518,521,524,527,530) SHALL BE LOOSE SUPPLIED. △5

11. SPARES :

11.1 ALL BLIND FLANGED NOZZLES INCLUDING MANWAYS & HANDHOLES SHALL BE PROVIDED WITH 10% FASTENERS PER SIZE (MIN. 2 SETS) AND 2 NOS. GASKETS PER NOZZLE.

DESIGN DATA

DESIGN CODE : ASME Section VIII, Div. 1, Edition 2019 + NB REGISTRATION + U STAMP

DESCRIPTION		UNITS	
OPERATING PRESSURE		psi (g)	15 PSI(g)@105 Deg.F △1
OPERATING TEMPERATURE		°F	105
DESIGN PRESSURE (INT/EXT)		psi (g)	105 / 15
DESIGN TEMPERATURE (INT/EXT)		°F	500 / 300 △1
MDMT AT MAWP		°F	32 AT 168.9 psi (g) △1
HYDROTEST PRESSURE (SHOP) UG-99(c)		psi (g) [kg/cm²(g)]	283.921 [19.96] REF. NOTE NO. 7 △1
HYDROTEST PRESSURE (SITE) UG-99(b)		psi (g)	219.565 △1
MAWP (INT.)		psi (g)	168.9 AT 500°F (LIMITED BY STANDARD FLANGE)
MAWP (EXT.)		psi (g)	15 AT 300°F △5
MAPnc		psi (g)	219.7 △1
CORROSION ALLOWANCE (INT/EXT)		inch/ (mm)	0 [0] / 0 [0] (MINIMUM 1/8" [3.2mm] CLAD), SUPPORT SKIRT - 0.059"[1.5mm]
NDT	RADIOGRAPHY		REFER NOTE NO. 4 (RT-4)
	DPT/MPT		YES, REFER NOTE NO. 5
JOINT EFFICIENCY (SHELL / DISH END)			0.85 / 1.0
PWHT			NO, EXEMPTED AS PER UCS-56
PFHT			EXEMPTED, AS PER UCS-79
IMPACT TEST			NO, REFER NOTE 2.5
INSULATION THK / TYPE (BY OTHERS)		inch/ (mm)	N.A.
FIRE PROOFING FOR SUPPORT			NA
PROCESS FLUID			--
PROCESS FLUID SPECIFIC GRAVITY			1.02 @105°F △1
ADDITIONAL LOADINGS AS PER UG-22			a,b,c,d,f,j
NB REGISTRATION			YES
VESSEL IN SOUR WATER SERVICE			YES
SERVICE (LETHAL OR NON LETHAL)			NON LETHAL
INSPECTION AUTHORITY			AI / TPI
ASME STAMPING			YES WITH 'U' DESIGNATOR
FABRICATED		lbs/Kg.	10225 / 4640
EMPTY		lbs/Kg.	17960 / 8150
OPERATING		lbs/Kg.	22105 / 10030
SHOP HYDROTEST		lbs/Kg.	20850 / 9460 △3
FIELD HYDROTEST		lbs/Kg.	27800 / 12610
SHIPPING		lbs/Kg.	10225 / 4640
ERECTION		lbs/Kg.	17960 / 8150

WIND	SPEED	101 MPH	RISK CATAGORY - III			
	DESIGN CODE	ASCE-7-2016	EXPOSURE CATEGORY-C			
SEISMIC	DESIGN CODE	ASCE 7 -2016 △1	SITE CLASS `D` R=3.0 △1	IMPORTANCE FACTOR 1.25	Ss 1.616	S1 0.869 △1

NOZZLE SCHEDULE

NOZZLE NO.	SIZE NPS / (DN)	THK. / SCH. INCH (mm) △7	ASME B16.5 TYPE - FACING	ASME B16.5 RATING	PROJ. FROM ℄ / T/L	R/F.PAD OD INCH (mm) x THK. INCH (mm)	SERVICE	REMARK
A	6 (150)	SCH. 80/0.431" (10.97)	WN-RF #	300 CL	SEE DRG	13.77"(350) x 0.393"(10)	FEED INLET W/ INLET BOX △5	WELD OVERLAY
B1	8 (200)	SCH. 80 / 0.5"(12.7)	WN-RF #	300 CL	SEE DRG	13.77"(350) x 0.393"(10)	VAPOR OUTLET	WELD OVERLAY
B2	3 (80)	SCH. 80 / 0.3"(7.62)	WN-RF #	300 CL	SEE DRG	7.086"(180) x 0.393"(10)	LIQUID OUTLET W/ VORTEX BREAKER	WELD OVERLAY
B3	2 (50)	0.653" (16.6)	LWN-RF ##	600 CL	SEE DRG	-- △1	SPARE NOZZLE	WELD OVERLAY
B4	2 (50)	0.653" (16.6)	LWN-RF ##	600 CL	SEE DRG	--	FUTURE PUMP MINIMUM FLOW W/BLIND	WELD OVERLAY
V △1	10 (250)	SCH. 80/0.594"(15.09)	WN-RF #	300 CL	SEE DRG	16.73"(425) x 0.393"(10)	VENT	WELD OVERLAY
D	2 (50)	SCH. 80 / 0.218"(5.54)	WN-RF ##	600 CL	SEE DRG	--	DRAIN	WELD OVERLAY
S	2 (50)	0.653" (16.6) △7	LWN-RF ##	600 CL	SEE DRG	--	STEAM OUT	WELD OVERLAY
M	24 (600)	0.708" (18)	WN-RF	150 CL	SEE DRG	37.40"(950) x 0.393"(10)	MANWAY W/ BLIND & DAVIT	CLADDING+WELD OVERLAY
L1	2 (50)	0.653" (16.6)	LWN-RF ##	600 CL	SEE DRG	--	LEVEL GAUGE	WELD OVERLAY
L2 △1	2 (50)	0.653" (16.6)	LWN-RF ##	600 CL	SEE DRG	--	LEVEL GAUGE △3	WELD OVERLAY
LT1	2 (50)	0.653" (16.6)	LWN-RF	300 CL	SEE DRG	--	LEVEL TRANSMITTER	WELD OVERLAY
LT2	2 (50)	0.653" (16.6)	LWN-RF	300 CL	SEE DRG	--	LEVEL TRANSMITTER	WELD OVERLAY
LT3	2 (50)	0.653" (16.6)	LWN-RF	300 CL	SEE DRG	--	LEVEL TRANSMITTER △5	WELD OVERLAY
LT4	2 (50)	0.653" (16.6)	LWN-RF	300 CL	SEE DRG	--	LEVEL TRANSMITTER	WELD OVERLAY
SA	--	0.314" (8) △7	--	--	SEE DRG	--	SKIRT MANWAY	
SO	6 (150)	SCH. 80/0.431" (10.97)	--	--	SEE DRG	--	SKIRT OPENING FOR NOZZLE B2	
SV1-SV4	3 (80)	SCH. 80 / 0.3"(7.62)	--	--	SEE DRG	--	SKIRT VENT W/ BANDING	

#REFER NOTE 1.21 ## REFER NOTE 1.22

REFERENCE PRAJ DRAWING /DOCUMENTS:-

DESCRIPTIONS	DRAWING/DOCUMENT NO.	CLIENT DOCUMENT NO.
MECHANICAL DESIGN CALCULATIONS FOR 18-D-271 ARG1 AMINE REGEN REFLUZ DRUM	E-22064-ME-11-CAL-0001	EN207122-PRAJ-9V3-00012
FABRICATION DETAILS DRAWING FOR 18-D-271 ARG1 AMINE REGEN REFLUZ DRUM	E-22064-ME-11-WFD-0001	EN207122-PRAJ-9V3-00035
MANHOLE DETAILS DRAWING FOR 18-D-271 ARG1 AMINE REGEN REFLUZ DRUM	E-22064-ME-11-WFD-0002	EN207122-PRAJ-9V3-00047
WELD MAP DRAWING FOR 18-D-271 ARG1 AMINE REGEN REFLUZ DRUM	E-22064-ME-11-WEL-0001	--
DEVELOPMENT DRAWING FOR 18-D-271 ARG1 AMINE REGEN REFLUZ DRUM	E-22064-ME-11-DEV-0001	EN207122-PRAJ-9V3-00065
MANUFACTURER'S NAME PLATE DETAIL DRAWING FOR 18-D-271 ARG1 AMINE REGEN REFLUZ DRUM	E-22064-ME-11-NPD-0001-SHT-1 OF 2	EN207122-PRAJ-9V3-00066
ASME NAME PLATE DETAIL DRAWING FOR 18-D-271 ARG1 AMINE REGEN REFLUZ DRUM	E-22064-ME-11-NPD-0001-SHT-2 OF 2	EN207122-PRAJ-9V3-00066
TRANSPORTATION DETAIL DRAWING FOR 18-D-271 ARG1 AMINE REGEN REFLUZ DRUM	E-22064-ME-11-TSD-0001	EN207122-PRAJ-9V3-00070
TOLERANCE DETAIL DRAWING	E-22046-ME-11-TOL-0001	--
SPARE PART INVENTORY	E-22046-ME-11-SPIR-0001	EN207122-PRAJ-9V3-XXXX

MATERIAL OF CONSTRUCTION

COMPONENTS	MATERIALS	COMPONENTS	MATERIALS
MAIN SHELL	SA-516 GR.70+SS316L CLAD	FITTINGS	SA 234 Gr. WPB+SS316L W/O
DISHED END	SA-516 GR.70+SS316L CLAD	SKIRT BASE PLATE/TOP PLATE	SA 516 Gr. 70
SKIRT SHELL	SA-516 GR. 70	LIFTING LUG / TAILING LUG	SA 516 Gr. 70
NOZZLE PIPE UPTO 12" NPS (DN300)	SA 106 Gr.B+SS316L W/O	GROUND LUG	AISI 304
NOZZLE PIPE ABOVE 12" NPS (DN300)	SA-516 GR.70+SS316L CLAD	BRACKET FOR NAME PLATE	SA 516 Gr. 70
NOZZLE FLANGE/BLIND (EXTERNAL)	SA-105 + SS316L W/O	NAME PLATE	AISI 304
NOZZLE FLANGE (INTERNAL)	N.A.	ANCHOR BOLTS (BY OTHERS)	ASTM F1554 GR.55
STUD/NUT FOR NOZZLE FLANGES (EXT.)	SA-193-B7M/SA-194-2HM	EXT. ATTACHMENTS	SA-516 GR. 70
BOLTS/NUTS (INT.)	ASTM SA-193-B8M/SA-194-8M	GASKET (EXTERNAL) △1	4.5 THK. SPIRAL WOUND SS316 WITH GRAPHITE FILLED WITH SS 316 INNER & OUTER RING, FLEXITALIC STYLES LSI,CGI , LAMONS STYLES WRI,WRI-LC, TEADIT STYLE 913M/913M LE
INTERNAL WELDED ATTACHMENT	SA240 TYPE 316L		
REMOVABLE INTERNALS	SS 316L		
MANWAY DAVIT	SA 106 GR. B		
MANWAY DAVIT EYE BOLT △1	IS 2062 E250 GR A/B	LADDER RUNG	AISI 316L

REVISIONS

REV. NO.	DESCRIPTION	ZONE NO.	DRAWN	CHKD.	APPD.	DATE
7	AS BUILT	--	RKC	AVM/SRW	BK	07-06-2023
6	REVISED AS PER MARKED	1-16 TO A-J	RKC	AVM/SRW	BK	18-05-2023
5	REVISED AS PER CLIENT COMMENTS	1-16 TO A-J	RKC	AVM/SRW	BK	04-11-2022
4	REVISED AS PER CLIENT COMMENTS	8-16 TO A-J	RKC	AVM/SAT	BK	07-09-2022
3	REVISED AS PER CLIENT COMMENTS	1-16 TO D-J	RKC	AVM/SAT	BK	29-06-2022
2	NOTES REVISED, DESIGN DATA CHANGED, NOZZLE HOLD REMOVED, CODE EDITION REVISED, FOUNDATION DATA & NOZZLE LOAD REVISED.	1-16 TO A-J	RKC	AVM/SAT	BK	05-04-2022
1	REVISED AS PER CLIENT COMMENTS	1-16 TO A-J	RKC	AVM/SAT	BK	01-12-2021
0	ISSUED FOR APPROVAL	--	RKC	AVM/SAT	BK	06-09-2021

MANUFACTURING ADDRESS :-
PRAJ INDUSTRIES LTD. SEZ UNIT-I,
PLOT NO.307 TO 314, SECTOR IV, KANDLA SPECIAL ECONOMIC ZONE,
GANDHIDHAM, KUTCH, GUJARAT, 370230, INDIA
MANUFACTURER'S SERIAL NUMBER :-
E-22064-18-D-271 (QTY - 1 No.)

ASME

"AS BUILT"

AIR PRODUCTS

CLIENT	:	WORLD ENERGY PARAMOUNT
EQUIPMENT OWNER	:	AIR PRODUCTS MANUFACTURING LLC △2
PROJECT	:	WORLD ENERGY RENEWABLES PROJECT
PROJECT LOCATION	:	WORLD ENERGY, PARAMOUNT , CA, USA

△2 P.O. NO. : 4505426379
PROJECT DOC. NO. EN207122-PRAJ-9V3-00020
CLIENT REV. NO.

THIS DWG. IS THE PROPERTY OF PRAJ INDUSTRIES LTD. AND SHOULD NOT BE REPRODUCED WITHOUT WRITTEN CONSENT FROM
PRAJ INDUSTRIES LTD.
``PRAJ TOWER", Bhumkar Chowk-Hinjewadi Road, Hinjewadi, Pune-411 057. (INDIA)

praj

TITLE : GENERAL ARRANGEMENT DRAWING FOR 18-D-271 ARG1 AMINE REGEN REFLUX DRUM

DRAWING SIZE : A1
SCALE NTS
PIL JOB CODE E-22064-ME-11-GAD-0001
DWG. NO. E-22064-ME-11-GAD-0001
SHEET 1 OF 1
REV. 4 5 6 7

MARKING DATA ON VESSEL
MARKING LETTER SIZE -75mm (3")

AIR PRODUCTS PURCHASE ORDER NO. :- 4505426379
AIR PRODUCTS PROJECT NUMBER :- EN207122
TAG NUMBER:- 18-D-271
SHIPPING WEIGHT:- 10225 lbs
EMPTY C.G. :- 22'-9 17/32" [6948 MM] △6

FOUNDATION LOAD DATA △2

CONDITION	WIND FORCE (lb)	WIND MOMENT (ft.lb)	SEISMIC FORCE (lb)	SEISMIC MOMENT (ft.lb)
EMPTY	2601	45572	6769	154698
OPERATING	2601	45572	8332	194993
HYDROTEST	2601	45571	N.A.	N.A.

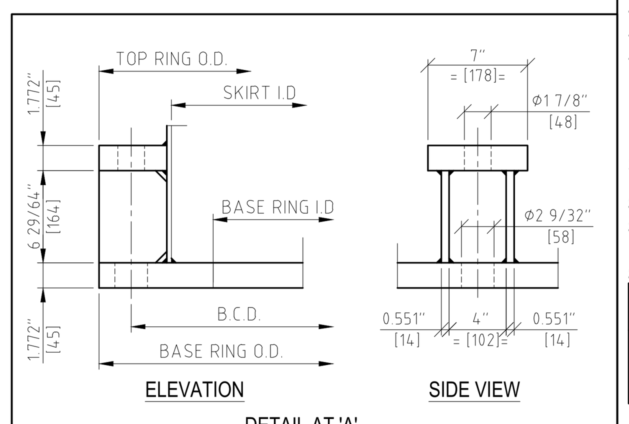

DETAIL AT 'A'
SKIRT BASE BLOCK DETAIL

MAX.NOZZLE LOADS ARE AT SHELL-NOZZLE JUNCTION
(FOR NOZZLE TO SHELL/DISH JUNCTION CHECK) (REFER NOTE 1.21 & 1.22) △2

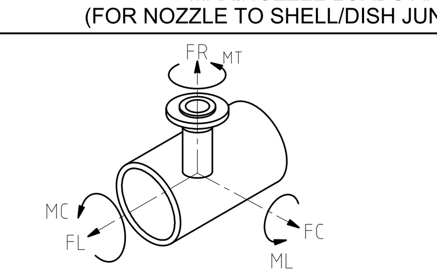

△1

Nozzle No	NPS	Forces [lbf] FR	FC	FL	Moments [ft-lbf] MC	ML	MT
A	6	1600	1200	1600	1600	2100	2400
B1	8	2200	1600	2200	2800	3700	4200
B2	3	810	610	810	400	520	600
B3,B4,S	2	630	470	630	210	270	310
V	10	2700	2000	2700	4400	5800	6600
L1, L2 △2	2	630	470	630	210	270	310

SPECIAL SERVICE :- WET H2S

BOLTING TORQUE TABLE

TAG NO	NOZZLE	NPS/(DN)	BOLT SIZE x NO.	TORQUE [N-m]
18-D-271	M	24" (600)	1+1/4"UN8 x 20	1080
18-D-271	B4	2" (50)	5/8"UNC x 8	122 △1

REFERENCE AIR PRODUCTS DOCUMENT AND SPECIFICATION

A8KM-PP-000-500532-A	MATERIALS & FABRICATION REQUIREMENTS FOR CARBON STEEL STEEL EQUIPMENT & PIPING IN WET H2S ENVIRONMENTS
A8KM-PP-000-500520-A	PAINTING
A8KM-PP-000-500540-A	GALVANIZING
A8KM-PP-000-500550-A	WELDING/NDE REQUIREMENTS FOR EQUIPMENT
A8KM-PP-000-50801-A	DESIGN AND FABRICATION SPECIFICATION FOR VESSELS ASME CODE SECTION VIII, DIVISIONS 1 AND 2.
4WEQ-1051	WELDING OF HYCO PLANT EQUIPMENT
4WGN-10001	SHIPMENT AND PACKING SPECIFICATION FOR EQUIPMENT AND MATERIALS BEING EXPORTED DIRECTLY BY VENDORS
SPEC-ENG-DOC001	SUPPLIER DESIGNED, SHOP-FABRICATED PRESSURE EQUIPMENT
SPEC-ENG-MQ042	MATERIAL CERTIFICATION AND RETESTING REQUIREMENTS
SPEC-ENG-MQ057	MECHANICAL EQUIPMENT GASKETS
A8KM-PP-000-40002-A	STRUCTURAL DATA FOR MECHANICAL EQUIPMENT
A8KM-PP-000-20001-A	PLANT SITE DATASHEET △1
A8KM-PP-000-500512-A	POSITIVE MATERIAL IDENTIFICATION

LIST OF TECHNICAL DELIVERY DOCUMENT (TDC)

TDC NO.
E-22046-ME-00-TDC-0003 (SA-516 Gr.70 1N + PWHT)
E-22046-ME-00-TDC-0102 (SA-105 PWHT)
E-22046-ME-00-TDC-0302 (SA-106 Gr.B PWHT)
E-22046-ME-00-TDC-0402 (SA-234 WPB PWHT)
E-22046-ME-00-TDC-0509 (SA-193 Gr.B7M)
E-22046-ME-00-TDC-0515 (SA-194 Gr.2HM)
E-22046-ME-00-TDC-0603 (SPLW GASKET SS316)
E-22046-ME-00-TDC-0088 (SA-264)
E-22046-ME-00-TDC-0045 (SA-240 Type 316L)

REFERENCE STANDARD AND CODE

ASME SCTION VIII DIVISION-1	EDITION 2019
ASME BOILER & PRESSURE VESSEL CODE , SEC.II PART A & D	EDITION 2019
PIPE FLANGES AND FLANGED FITTINGS UP TO 24 NPS	ASME B 16.5 EDITION 2013
WELDED AND SEAMLESS WROUGHT CS PIPE	ASME B 36.10 M EDITION 2018
DELETED	
STUD,BOLTS HEAVY SERIES	ASME B 18.2.1 EDITION LATEST
NUTS HEAVY SERIES △5	ASME B 18.2.2 EDITION LATEST
UNIFIED INCH SCREW THREADS (UN AND UNR THREAD FORM)	ASME B 1.1 ED. 2019
FACTORY-MADE WROUGHT BUTTWELDING FITTINGS	ASME B 16.9 EDITION 2018
METALLIC GASKETS FOR PIPE FLANGES	ASME B 16.20 EDITION 2017

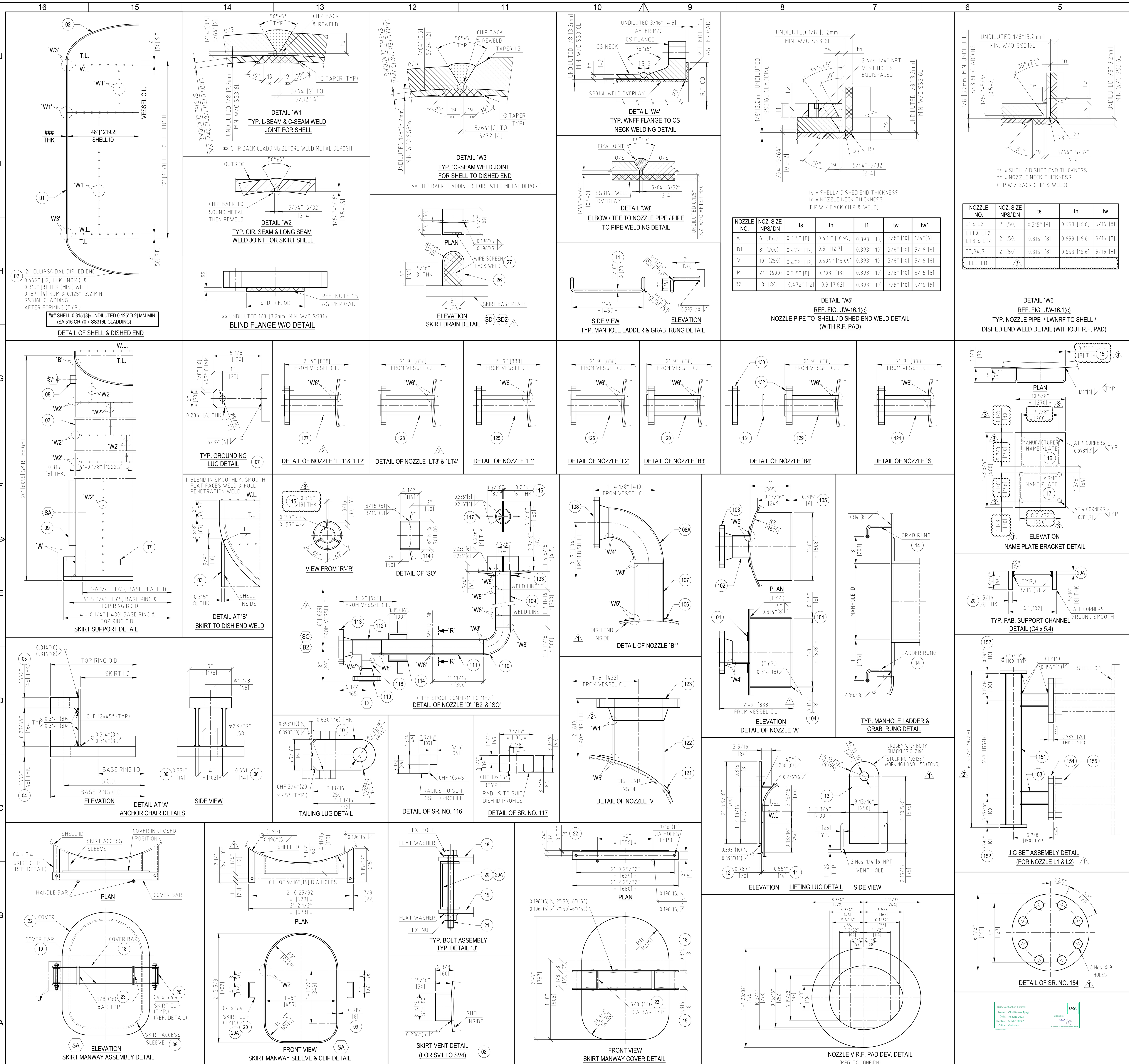

NOZZLE NO.	NOZ. SIZE NPS/ DN	ts	tn	t1	tw	tw1
A	6" (150)	0.315" [8]	0.431" [10.97]	0.393" [10]	3/8" [10]	1/4"[6]
B1	8" (200)	0.472" [12]	0.5" [12.7]	0.393" [10]	3/8" [10]	5/16"[8]
V	10" (250)	0.472" [12]	0.594" [15.09]	0.393" [10]	3/8" [10]	5/16"[8]
M	24" (600)	0.315" [8]	0.708" [18]	0.393" [10]	3/8" [10]	5/16"[8]
B2	3" [80]	0.472" [12]	0.3"[7.62]	0.393" [10]	3/8" [10]	5/16"[8]

NOZZLE NO.	NOZ. SIZE NPS/ DN	ts	tn	tw
L1 & L2	2" [50]	0.315" [8]	0.653"[16.6]	5/16"[8]
LT1 & LT2 LT3 & LT4	2" [50]	0.315" [8]	0.653"[16.6]	5/16"[8]
B3,B4,S	2" [50]	0.315" [8]	0.653"[16.6]	5/16"[8]
DELETED	△3			

NOTES :-

1) ALL DIMENSIONS ARE IN INCHES /(MM), UNLESS OTHERWISE SPECIFIED
2) THIS DRAWING TO BE READ IN CONJUNCTION WITH
   a) G.A. DRAWING NO : E-22064-ME-11-GAD-0001 (EN207122-PRAJ-9V3-00020)
3) GIVEN BILL OF MATERIAL IS FOR 1 NO. EQUIPMENT ONLY & TOTAL EQUIPMENT QTY IS 1 No.
4) FILLET WELD SHALL BE 1/4"[6] mm (MINIMUM) UNLESS OTHERWISE SPECIFIED.

SPARE BILL OF MATERIAL

SR.NO	DESCRIPTION	QTY	UOM	MAT.CODE	MATL. DESC	SIZE (MM)	WT (KG)	REMARKS	TDC
204	M STUD NUT WASHER	2	SET	5175479	STUD-2NW-SA193B7M&194-2HM-1+1/4"UN8X230L		1	STD.	0509/0515
203	M GASKET	2	EA	5209808	GSKT-RN-SPLW-SS316-GRPH-T4.5-NPS 24-#150	△1	1	STD.	0603
202	B4 STUD NUT WASHER	2	SET	5209802	STUD-2NW-SA193B7M&194-2HM-5/8UNCx140-TDC		4	STD.	0509/0515
201	B4 GASKET	2	EA	5141047	GSKT-RN-SPLW-SS316-GRPH-T4.5-2"#600		1	STD.	0603

JIG SET NOZAZLE BILL OF MATERIAL

SR.NO	DESCRIPTION	QTY	UOM	MAT.CODE	MATL. DESC	SIZE (MM)	WT (KG)	REMARKS	TDC
155	HEX.BOLT+NUT+WASHER	16	SET	5012182	HEXBOLT-N-2W-IS1367-4.6-M16X100		--	STD	N.A.
154	BLIND FLANGE	2	EA	5007421	PLATE-IS2062-E250-BR-T20	Ø165 x 20	6.5	CIRCLE	N.A.
153	PIPE	0.3	M	5005487	PIPE-WLD-PE-IS1239-40NB-HEAVY		1.2	CUT TO SUIT	N.A.
152	END PLATE	2	EA	5007417	PLATE-IS2062-E250-BR-T10	Ø100 x 10	1	CIRCLE	N.A.
151	PIPE	2	M	5005489	PIPE-WLD-PE-IS1239-50NB-HEAVY		12.4	CUT TO SUIT	N.A.

BILL OF MATERIAL

SR.NO	DESCRIPTION	QTY	UOM	MAT.CODE	MATL. DESC	SIZE (MM)	WT (KG)	REMARKS	TDC
133	B2 RF PAD	1	EA	5159591	PLATE-SA516GR70-T10-TDC	190 x 90 x 10	1.5	RING	0003
132	STUD / 2 NUT / 2 WASHER	8	SET	5209802	STUD-2NW-SA193B7M&194-2HM-5/8UNCx140-TDC	△1	4	STD.	0509/0515
131	B4 GASKET	1	EA	5141047	GSKT-RN-SPLW-SS316-GRPH-T4.5-2"#600		1	STD.	0603
130	B4 BLIND FLANGE	1	EA	5208273	FLG -BLFF-SA105-600#-NPS2-TDC		4.6	ASME B-16.5	0102
129	B4 LWNRF	1	EA	5208323	FLG-LWNFF-SA105-600#-NPS2-T16.6-260L-TDC	△2	10	ASME B-16.5	0102
128	LT3, LT4 LWNRF	2	EA	5204058	FLG-LWNFF-SA105-300#-NPS2-T16.6-260LG		18.8	ASME B-16.5	0102
127	LT1, LT2 LWNRF	2	EA	5204058	FLG-LWNFF-SA105-300#-NPS2-T16.6-260LG		18.8	ASME B-16.5	0102
126	L2 LWNRF	1	EA	5208323	FLG-LWNFF-SA105-600#-NPS2-T16.6-260L-TDC		9.4	ASME B-16.5	0102
125	L1 LWNRF	1	EA	5208323	FLG-LWNFF-SA105-600#-NPS2-T16.6-260L-TDC		9.4	ASME B-16.5	0102
124	S LWNRF	1	EA	5208323	FLG-LWNFF-SA105-600#-NPS2-T16.6-260L-TDC		10	ASME B-16.5	0102
123	V FLANGE	1	EA	5208272	FLG -WNFF-SA105-NPS10-#300-SCH80-TDC		48.6	ASME B-16.5	0102
122	V PIPE △2	0.5	M	5147035	PIPE-SMLS-PE-SA106-GRB-NPS10-SCH80	△2	61.2	CUT TO SUIT	0302
121	V RF PAD	1	EA	5159591	PLATE-SA516GR70-T10-TDC	470 x 273 x 10	9.3	(REF. DEV.)	0003
120	B3 LWNRF	1	EA	5208323	FLG-LWNFF-SA105-600#-NPS2-T16.6-260L-TDC		10	ASME B-16.5	0102
119	D FLANGE	1	EA	5208266	FLG -WNFF-SA105-NPS2-#600-SCH80-TDC		4.3	ASME B-16.5	0102
118	D PIPE	0.1	M	5186582	PIPE-SMLS-PE-SA106-GRB-NPS-2-SCH80		0.8	CUT TO SUIT	0302
117	VORTEX BREAKER PLATE	1	EA	5131441	PLATE-SA240-316L-T8-TDC	180 x 90 x 8	1	CUT TO SUIT	0002
116	VORTEX BREAKER PLATE	2	EA	5131441	PLATE-SA240-316L-T8-TDC	89 x 87 x 8 △3	1	CUT TO SUIT	0002
115	SUPPORT PLATE	3	EA	5071387	PLATE-SA 516GR70-T8-TDC	100 x 30 x 8	0.4	CUT TO SUIT	0002
114	SO PIPE	0.15	M	5147033	PIPE-SMLS-PE-SA106-GRB-NPS6-SCH80		6.4	CUT TO SUIT	0302
113	B2 FLANGE	1	EA	5208267	FLG -WNFF-SA105-NPS3-#300-SCH80-TDC		7.5	ASME B-16.5	0102
112	B2 REDUCING TEE	1	EA	5209807	TEE-RED-BE-SA234WPB-S80-B16.9-NPS3xNPS2		4.5	STD.	0402
111	B2 PIPE	0.7	M	5147030	PIPE-SMLS-PE-SA106-GRB-NPS3-SCH80		10.7		0302
110	B2 LBOW	1	EA	5152500	ELBOW-S-BE-1.5D-90D-SA234-WPB-NPS3-S80		2.69	STD.	0402
109	B2 PIPE	1.5	M	5147030	PIPE-SMLS-PE-SA106-GRB-NPS3-SCH80		22.9	CUT TO SUIT	0302
108A	B1 ELBOW	1	EA	5179285	ELBOW-S-BE-1.5D-90D-SA234-WPB-NPS8-80	△1	15	STD	0402
108	B1 FLANGE	1	EA	5208271	FLG -WNFF-SA105-NPS8-#300-SCH80-TDC		33	ASME B-16.5	0102
107	B1 PIPE	0.5	M	5147034	PIPE-SMLS-PE-SA106-GRB-NPS8-SCH80	△1	21.3	CUT TO SUIT	0302
106	B1 RF PAD	1	EA	5159591	PLATE-SA516GR70-T10-TDC	350 x 220 x 10	4.6	RING	0003
105	BOX END PLATE	1	EA	5131441	PLATE-SA240-316L-T8-TDC	508 x 508 x 8	16.5	CUT TO SUIT	0045
104	TOP PLATE FOR BOX	2	EA	5131441	PLATE-SA240-316L-T8-TDC	508 x 305 x 8	19.8	CUT TO SUIT	0045
103	A FLANGE	1	EA	5208270	FLG -WNFF-SA105-NPS6-#300-SCH80-TDC		21.5	ASME B-16.5	0102
102	A PIPE	0.2	M	5147033	PIPE-SMLS-PE-SA106-GRB-NPS6-SCH80		8.5	CUT TO SUIT	0302
101	A RF PAD	1	EA	5159591	PLATE-SA516GR70-T10-TDC	350 x 170 x 10	5.8	RING	0003
27	WIRE MESH	0.1	M2	5034194	EXPMTL-AISI304-FLATMESH-20MM X 2.9 DIA	△1	1	CUT TO SUIT △2	N.A.
26	SKIRT DRAIN PLATE	2	EA	5071387	PLATE-SA 516GR70-T8-TDC	275 x 110 x 8	3.8	CUT TO SUIT	0003
25	M MANHOLE	1	EA	665474	MANHOLE-SA516 GR.70+316L-24NPS-150#-DRG		1	REF.DRAWING	N.A.
24	M R.F. PAD	1	EA	5159591	PLATE-SA516GR70-T10-TDC	950 x 610 x 10	32.7	RING	0003
23	ROUND BAR	2	EA	5159594	PLATE-SA516GR70-T16-TDC	16 x 16 x 125	0.5	CUT TO SUIT	0003
22	SKIRT ACCESS COVER	1	EA	5071387	PLATE-SA 516GR70-T8-TDC	787 x 558 x 8	27.6	CUT TO SUIT △2	0003
21	BOLT+ NUT+WASHER	2	SET	5209800 △3	HEXBOLT-2NW-SA193B7M&194GR2HM-1/2UNCx160		1	STD.	0509/0515
20A	FAB. CHANNEL PLATE	2	EA	5071387	PLATE-SA 516GR70-T8-TDC	225 x 86 x 8	2.4	CUT TO SUIT	0003
20	FAB. CHANNEL PLATE	4	EA	5071387	PLATE-SA 516GR70-T8-TDC	225 x 40 x 8	2.3	CUT TO SUIT	0003
19	COVER BOT. PLATE	2	EA	5071387	PLATE-SA 516GR70-T8-TDC	680 x 51 x 8	4.4	cuT TO SUIT △2	0003
18	COVER TOP PLATE	1	EA	5071387	PLATE-SA 516GR70-T8-TDC	680 x 51 x 8	2.2	cuT TO SUIT	0003
17	ASME NAME PLATE	1	EA	5020959	NAME-PLATES-AISI304-ASME		1	REF.DRAWING	N.A.
16	MFG. NAME PLATE	1	EA	5005393	NAME-PLATE-AISI304	△3	1	REF.DRAWING	N.A.
15	NAME PLATE BRACKET	1	EA	5071387	PLATE-SA 516GR70-T8-TDC	450 x 400 x 8	8.5	CUT TO SUIT	0002
14	LADDER RUNG	2	EA	5000124	ROUND BAR-AISI316L-D-20	20 x 1000	5	CUT TO SUIT	N.A.
13	SUPPORT PLATE	2	EA	5071387	PLATE-SA 516GR70-T8-TDC	250 x 84 x 8	3.2	CUT TO SUIT	0003
12	LIFTING LUG	2 △3	EA	5159595	PLATE-SA516GR70-T20-TDC	700 x 250 x 20	54.9	CUT TO SUIT	0003
11	PAD PLATE FOR LIFTING LUG	1	EA	5185328	PLATE-SA516GR70-T14-TDC	400 x 250 x 14	24.7	CUT TO SUIT	0003
10	TAILING LUG	1	EA	5159594	PLATE-SA516GR70-T16-TDC	350 x 164 x 16	7.2	CUT TO SUIT △2	0003
09	SKIRT ACCESS PLATE	1	EA	5071387	PLATE-SA 516GR70-T8-TDC	2100 x 150 x 8	19.8	CUT TO SUIT	0003
08	VENT HOLE PIPE	0.4	M	5147030	PIPE-SMLS-PE-SA106-GRB-NPS3-SCH80		6.1	CUT TO SUIT	0302
07	GROUNDING LUG	2	EA	5034291	PLATE-AISI304-T6	130 x 50 x 6	0.6	CUT TO SUIT	N.A.
06	GUSSET FOR BASE PLATE	16	EA	5185328	PLATE-SA516GR70-T14-TDC	164 x 140 x 14	40.3	CUT TO SUIT	0003
05	TOP PLATE	8	EA	5071413	PLATE-SA 516GR70-T45-TDC	178 x 130 x 45	65.4	CUT TO SUIT	0003
04	BASE PLATE	1	EA	5071413	PLATE-SA 516GR70-T45-TDC	1480 x1073x45	288.3	RING IN SECTOR	0003
03	SKIRT SHELL	1	EA	5071387	PLATE-SA 516GR70-T8-TDC	3865 x 5984 x 8	1452.5	CUT TO SUIT △2	0003
02	DISHED ENDS △1	2	EA	677158	DISH-2:1ELLIPTICAL-SA516GR70-T12+3.2CLAD	BLANK Ø1550	445	CONF. TO MFG.	N.A.
01	MAIN SHELL	1	EA	5204011	PLATE-ROLL-BOND-SA516-70+SS316L-T8+3.2	3868x3558x11.2	1210	CUT TO SUIT	0003/0045 /0088

SALES ORDER No.	ITEM No.	MATERIAL No.
30002551	10	9006696

"AS BUILT"

REVISIONS

REV. NO.	DESCRIPTION	ZONE NO.	DRAWN	CHKD.	APPD.	DATE
3	AS BUILT	--	RKC	AVM/SRW	BK	07-06-2023
2	REVISED AS PER CLIENT COMMENTS	1-16 TO B-I	RKC	AVM/SAT	BK	29-06-2022
1	JIG SET ASSY, SKIRT DRAIN, SPARE LIST ADDED. NOZZLE B1 REVISED & PROJECTION HOLD REMOVED.	1-16 TO A-J	RKC	AVM/SAT	BK	05-04-2022
0	ISSUED FOR APPROVAL	--	RKC	AVM/SAT	BK	02-09-2021

MANUFACTURING ADDRESS :-
PRAJ INDUSTRIES LTD. SEZ UNIT-I,
PLOT NO.307 TO 314, SECTOR IV, KANDLA SPECIAL ECONOMIC ZONE,
GANDHIDHAM, KUTCH, GUJARAT, 370230, INDIA
MANUFACTURER'S SERIAL NUMBER :-
E-22064-18-D-271 (QTY - 1 No.)

ASME

AIR PRODUCTS

CLIENT	:	WORLD ENERGY PARAMOUNT
EQUIPMENT OWNER	:	AIR PRODUCTS MANUFACTURING LLC △1
PROJECT	:	WORLD ENERGY RENEWABLES PROJECT
PROJECT LOCATION	:	WORLD ENERGY, PARAMOUNT , CA, USA

P.O. NO. : 4505426379
PROJECT DOC. NO. EN207122-PRAJ-9V3-00035
CLIENT REV. NO.

THIS DWG. IS THE PROPERTY OF PRAJ INDUSTRIES LTD. AND SHOULD NOT BE REPRODUCED WITHOUT WRITTEN CONSENT FROM
PRAJ INDUSTRIES LTD.
``PRAJ TOWER", Bhumkar Chowk-Hinjewadi Road, Hinjewadi, Pune-411 057. (INDIA)

praj

LRQA Verification Limited
Name: Vikul Kumar Tyagi
Date: 10 June 2023
Ref No.: AHM2100247
Office: Vadodara

TITLE : FABRICATION DETAILS DRAWING FOR 18-D-271 ARG1 AMINE REGEN REFLUX DRUM

DRAWING SIZE : A1
SCALE NTS
PIL JOB CODE E-22064-ME-11-WFD-0001
DWG. NO. E-22064-ME-11-WFD-0001
SHEET 1 OF 1
REV. 0 1 2 3

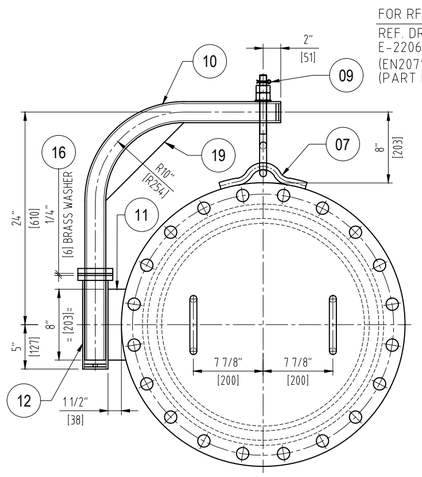

VIEW FROM - X

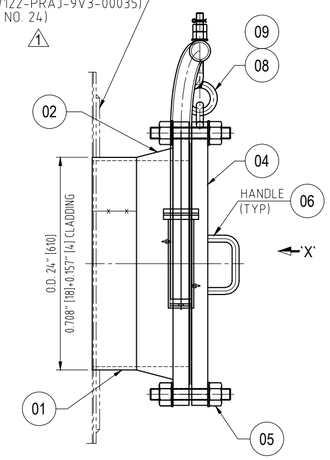

ELEVATION

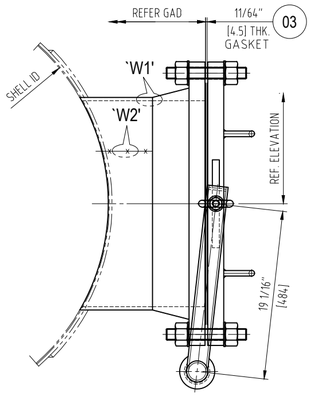

PLAN

MANHOLE DETAIL - M

FOR DAVIT ORIENTATION & PROJECTION REFER RESPECTIVE G.A. DRAWING

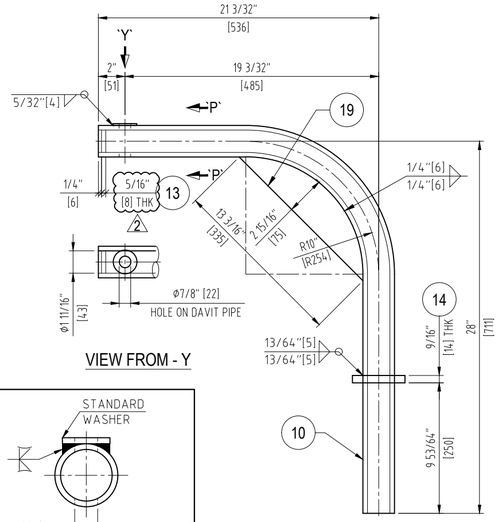

VIEW FROM - Y

DETAIL OF DAVIT ARM

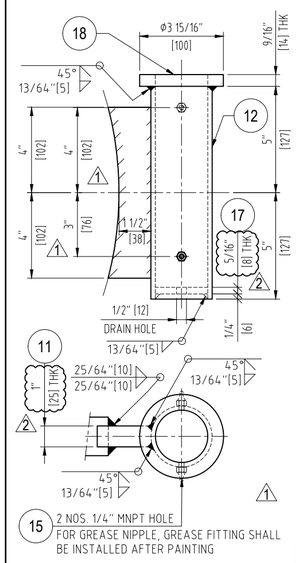

DETAIL OF DAVIT ARM SUPPORT PIPE

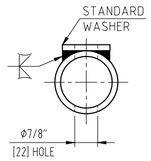

SECTION `P-P'

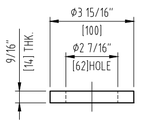

DETAIL OF SR. NO. 14 DAVIT ARM SUPPORT

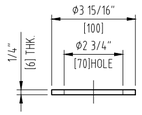

DETAIL OF SR. NO. 16 BRASS WEAR RING

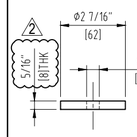

DETAIL OF SR. NO. 17 SLEEVE END PLATE

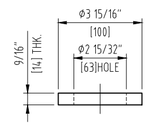

DETAIL OF SR. NO. 18 COLLER PLATE

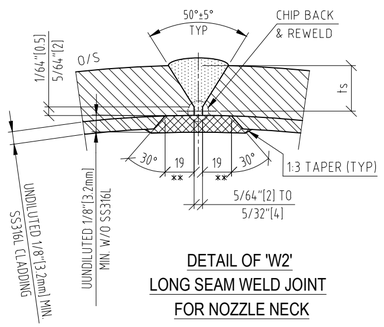

DETAIL OF 'W2' LONG SEAM WELD JOINT FOR NOZZLE NECK

** CHIP BACK CLADDING BEFORE WELD METAL DEPOSIT

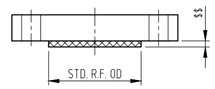

$$ UNDILUTED 1/8" [3.2mm] MIN. W/O SS316L

MANHOLE BLIND FLANGE W/O DETAIL

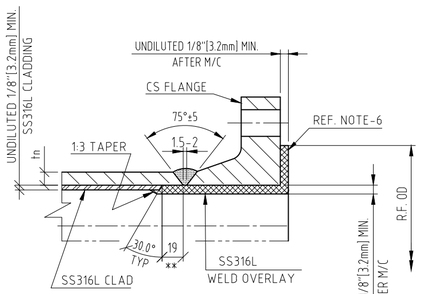

DETAIL AT 'W1' TYP. WNFF FLANGE TO SS CLADDED NOZZLE NECK WELDING DETAIL

** CHIP BACK CLADDING BEFORE WELD METAL DEPOSIT

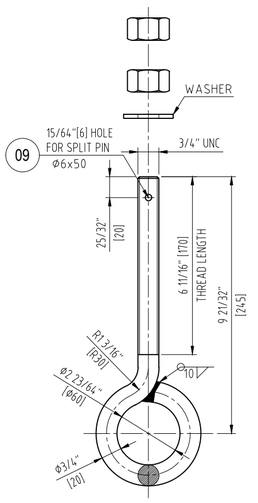

DETAIL OF EYE BOLT (08)

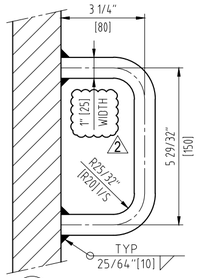

(06) DETAIL OF HANDLE

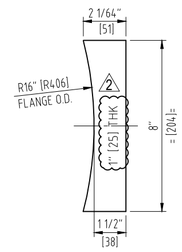

DETAIL OF SR. NO. 11 SLEEVE SUPP. PLATE

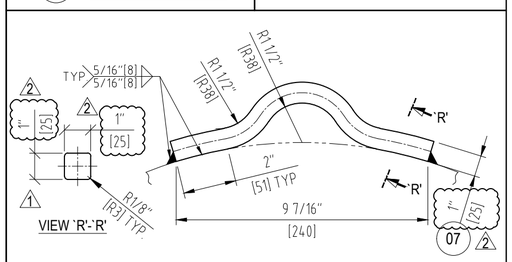

VIEW 'R'-'R'

(07) DETAIL OF EYE BOLT SUPPORT

NOTES :-

1) ALL DIMENSIONS ARE IN INCHES (mm), UNLESS OTHERWISE SPECIFIED. ALL METRIC UNITS ARE FOR REFERENCE ONLY AND SHALL NOT BE INTERPRETED AS A PRECISE CONVERSION.
2) THIS DRAWING IS TO BE READ IN CONJUNCTION WITH
   a) GENERAL ASSEMBLY OF DWG. NO. E-22064-ME-11-GAD-0001 (EN207122-PRAJ-9V3-00020)
   b) FABRICATION DETAIL OF DWG. NO. E-22064-ME-11-WFD-0001 (EN207122-PRAJ-9V3-00035)
3) FOR DAVIT ORIENTATION REFER RESPECTIVE G.A. DRAWING.
4) TOTAL QTY :- 1 No.
5) GIVEN BILL OF MATERIAL FOR ONE EQUIPMENT ONLY, AND BILL OF MATERIALS ARE IN MM DUE TO PRAJ PROGRAM.
6) THE GASKET SEATING SURFACES OF NOZZLE FLANGES SHALL HAVE A FINISH OF RA 125-250 MICRO-INCH FOR SPWD GASKET(REFER B16.5 PARA. 6.4..5.3)

SR.NO	DESCRIPTION	QTY	UOM	MAT.CODE	MATL. DESC	SIZE (MM)	WT	REMARKS	TDC
19	SUPPORT PLATE	1	EA	5071387	PLATE-SA 516GR70-T8-TDC	335 x 75 x 8	1.4	CUT TO SUIT	0002
18	COLLER PLATE	1	EA	5185328	PLATE-SA516GR70-T14-TDC	100 x 62 x 14	0.5	RING	0003
17	SLEEVE END PLATE	1	EA	5071387	PLATE-SA 516GR70-T8-TDC 2	62 x 12 x 8	0.2	RING	0002
16	BRASS WASHER	1	EA	5209810	WASHER-BRASS-OD100-ID70-T6		0.2	STD.	N.A.
15	GREASE NIPPLE	2	EA	5035410	GREASE NIPPLE-NPT-AISI304-1/4"		1	STD.	N.A.
14	DAVIT ARM SUPPORT	1	EA	5185328	PLATE-SA516GR70-T14-TDC	100 x 62 x 14	0.5	RING	0003
13	END PLATE	1	EA	5071387	PLATE-SA 516GR70-T8-TDC 2	43 x 8	0.2	CIRCLE	0002
12	SLEEVE PIPE	0.3	M	5005618	PIPE-SMLS-BE-SA106M-GRB-65DN-SCH40		2.63	CUT TO SUIT	0302
11	SLEEVE SUPP. PLATE	1	EA	CODE	PLATE-SA516GR70-T25-TDC 2	204 x 55 x 25	2.2	CUT TO SUIT	0003
10	DAVIT ARM PIPE	1.3	M	5147028	PIPE-SMLS-PE-SA106-GRB-NPS2-SCH160		14.5	CUT TO SUIT	0302
09	SPLIT PIN	1	EA	5012771	SPLIT-PIN-AISI304-D6X50		1	STD.	N.A.
08	EYE BOLT	1	SET	5209809	EYEBOLT-NW-IS2062E250BR-EYEDIA60-3/4X245		1	STD.	N.A.
07	EYE BOLT SUPPORT	1	EA	CODE	PLATE-SA516GR70-T25-TDC	350 x 25 x 25	1.7	CUT TO SUIT	0003
06	BAR FOR HANDLE	2	EA	CODE	PLATE-SA516GR70-T25-TDC 2	300 x 25 x 25	2.9	CUT TO SUIT	0003
05	M STUD NUT WASHER	20	SET	5175479	STUD-2NW-SA193B7M&194-2HM-1x1/4"UN8X230L		50	STD.	0509/0515
04	M BLIND FLANGE	1	EA	5163431	FLG-BLFF-SA105-B16.5-150#-NPS24-TDC		196	ASME B-16.5	0102
03	M GASKET	1	EA	5209808	GSKT-RN-SPLW-SS316-GRPH-T4.5-NPS 24-#150		1	STD.	0603
02	M FLANGE	1	EA	5203696	FLG-WNFF-SA105-B16.5-150#-NPS24-18 THK		125	ASME B-16.5	0102
01	M NECK	1	EA	5204014	PLATE-ROLL-BOND-SA516-70+SS316L-T18+4	1848 x 250x22	79.8	CUT TO SUIT	0003/0045 /0088

BILL OF MATERIAL

SALES ORDER No.	ITEM No.	MATERIAL No.
30002551	10	665474

"AS BUILT"

REV. NO.	DESCRIPTION	ZONE NO.	DRAWN	CHKD.	APPD.	DATE
2	AS BUILT	--	RKC	AVM/SRW	BK	07-06-2023
1	EYE BOLT SIDE VIEW ADDED R.F. PAD PART NO & DWG NO ADDED GREASE HOLE EL. CHANGED & NOTE ADDED	3-10 TO A-H	RKC	AVM/SAT	BK	05-04-2022
0	ISSUED FOR APPROVAL	--	RKC	AVM/SAT	BK	01-12-2021

REVISIONS

MANUFACTURING ADDRESS :-
PRAJ INDUSTRIES LTD. SEZ UNIT-I,
PLOT NO.307 TO 314, SECTOR IV, KANDLA SPECIAL ECONOMIC ZONE,
GANDHIDHAM, KUTCH, GUJARAT, 370230, INDIA
MANUFACTURER'S SERIAL NUMBER :-
E-22064-18-D-271 (QTY - 1 No.)

ASME

LRQA Verification Limited
Name: Vikul Kumar Tyagi
Date: 10 June 2023
Ref No.: AHM2100247
Office: Vadodara
Signature:
A member of the LRQA Group Limited

AIR PRODUCTS

CLIENT : WORLD ENERGY PARAMOUNT
EQUIPMENT OWNER : AIR PRODUCTS MANUFACTURING LLC
PROJECT : WORLD ENERGY RENEWABLES PROJECT
PROJECT LOCATION : WORLD ENERGY, PARAMOUNT , CA, USA

P.O. NO. : 4505426379
PROJECT DOC. NO. : EN207122-PRAJ-9V3-00047
CLIENT REV. NO. :

THIS DWG. IS THE PROPERTY OF PRAJ INDUSTRIES LTD. AND SHOULD NOT BE REPRODUCED WITHOUT WRITTEN CONSENT FROM
PRAJ INDUSTRIES LTD.
``PRAJ TOWER", Bhumkar Chowk-Hinjewadi Road, Hinjewadi, Pune-411 057. (INDIA)

praj

TITLE : MANHOLE DETAILS DRAWING FOR 18-D-271 ARG1 AMINE REGEN REFLUX DRUM

DRAWING SIZE : A2

SCALE NTS

PIL JOB CODE E-22064-ME-11-WFD-0002

DWG. NO. E-22064-ME-11-WFD-0002

SHEET 1 OF 1

REV. 0 1 2

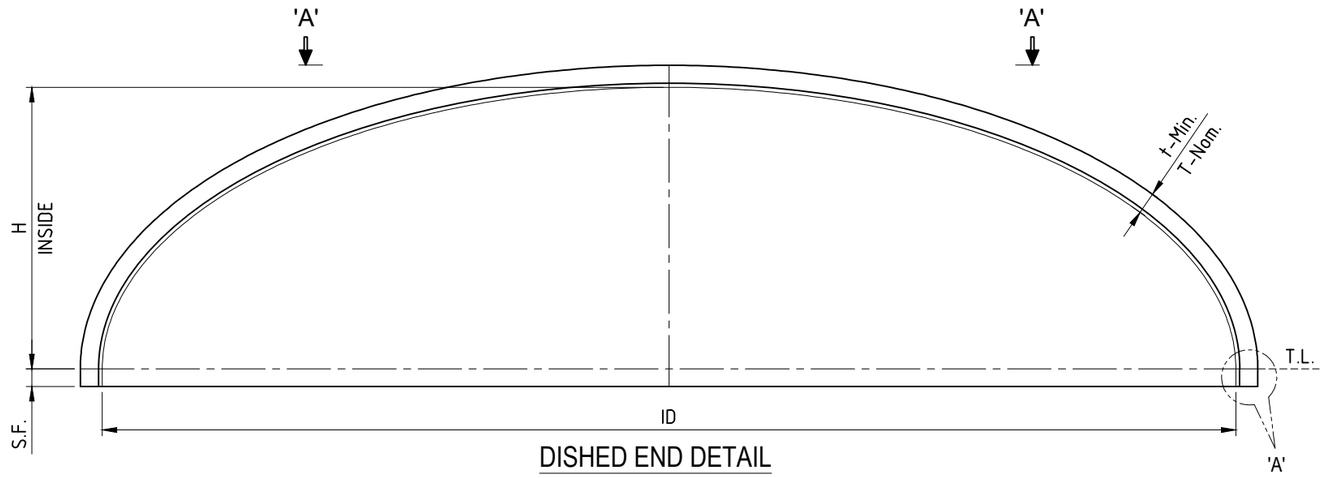

DISHED END DETAIL

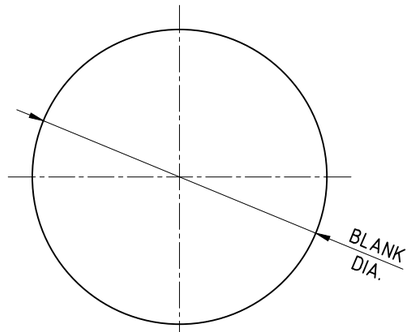

VIEW FROM `A'-`A`

SR. NO.	VESSEL TAG.NO.	I.D	H	S.F	T- Nom.	t Min	SPIN HOLE Ø	RADIOGRAPHY	BLANK DIA. (REFER NOTE-6)	WEIGHT (Kgs)	QTY.	WELD SEAM	REMARK
1	18-D-271	48"[1219.2]	12"[304.8]	2"[50]	0.472" [12] + 0.157" [4]	0.314" [8] + 0.125" [3.2]	REFER NOTE 5	N.A.	5'-1 1/32"[~1550]	~180	1	NO	TOP DISHED END
2	18-D-271	48"[1219.2]	12"[304.8]	2"[50]	0.472" [12] + 0.157" [4]	0.314" [8] + 0.125" [3.2]	REFER NOTE 5	N.A.	5'-1 1/32"[~1550]	~180	1	NO	BOT. DISHED END

GENERAL NOTES:-

(1) DIMENSIONS ARE IN INCH [MM]. UNLESS OTHERWISE SPECIFIED.
(2) CODE OF CONSTRUCTION :- ASME BOILER & PRESSURE VESSEL CODE, SECTION VIII, DIV.1. EDITION 2019,
(3) MATERIAL OF CONSTRUCTION :- SA-516 GR.70+SS316L CLAD (REFER, E-22046-ME-00-TDC-0003 & E-22046-ME-00-TDC-0088)
(4) TYPE OF DISHED END :- 2:1 ELLIPSOIDAL
(5) SPIN HOLE IS PERMITTED IN THE DISHED END, SINCE THERE ARE NOZZLE OPENINGS AT CENTER.
(6) DISHED END BLANK DIAMETER AND NOMINAL THICKNESS SHALL BE CONFIRMED BY DISHED END FORMING VENDOR.
(7) PROFILE SHALL BE CHECKED WITH TEMPLATE AND TEMPLATE SHALL BE PROVIDED BY MANUFACTURING / DISHED END FORMING VENDOR.
(8) PROCESS OF MANUFACTURING :- COLD FORMING.
(9) VISUAL INSPECTION AFTER FORMING SHALL BE CARRIED OUT.
(10) THIS DRAWING SHALL BE READ IN CONJUNCTION WITH E-22064-ME-11-GAD-0001
(11) HEAT TREATMENT :- YES, REFER TABLE NO. 1
(12) DP TEST :- TO BE CARRIED OUT ON INSIDE AND OUTSIDE SURFACE OF KNUCKLE PORTION AND WELD EDGE.
(13) WELDING ON BASE METAL BY VENDOR IS NOT ALLOWED.
(14) FORMING VENDOR SHALL INDICATE IN THEIR INSPECTION REPORT WHETHER OR NOT THE PART HAS BEEN HEAT TREATED.
(15) AS PER UG-81, OVERCROWNING TOLERANCE :- 1.25% x ID 0.6''(15.24), UNDER CROWNING TOLERANCE :- 0.625% x ID 0.3'' (7.62), KNUCKLE SHALL NOT BE LESS THAN SPECIFIED. AND AS PER UG-80 OUT OF ROUNDNESS :- 1% OF NOM. DIA. 0.479''(12.19) ON VESSEL ID LOCATION.
(16) FORMING VENDOR SHALL APPLY HIS LOGO ALONG WITH MFG. SERIAL NO. ON EACH DISHED END WHICH SHALL BE MENTIONED IN INSPECTION REPORT FOR IDENTIFICATION PURPOSE.
(17) IF REQUIRED, LIFTING LUGS OF SAME MATERIAL AS OF DISHED END SHALL BE WELDED AS PER WPS APPROVED BY PRAJ. AND WPQ QUALIFIED AS PER ASME SEC. IX AND SAME SHALL BE APPROVED BY PRAJ. THESE LUGS SHALL BE REMOVED AT PRAJ WORKS AFTER WELDING DISHED END WITH EQUIPMENT. DP TEST SHALL BE CARRIED OUT AFTER REMOVAL OF TEMPORARY ATTACHMENTS.
(18) THE OUT OF ROUNDNESS FOR DISHED END SHALL BE MEASURED WITH FOLLOWING TEMPLATE.

ITEM	R (mm)	L (mm)	DEVIATION (mm)
TOP DISHED END	2:1 ELLIPSOIDAL	21.81" [554]	±0.22 [5.6]
BOTTOM DISHED END	2:1 ELLIPSOIDAL	21.81" [554]	±0.22 [5.6]

LRQA Verification Limited
Name: Vikul Kumar Tyagi
Date: 10 June 2023
Ref No.: AHM2100247
Office: Vadodara
Signature:
A member of the LRQA Group Limited
LRQA003 11.2021

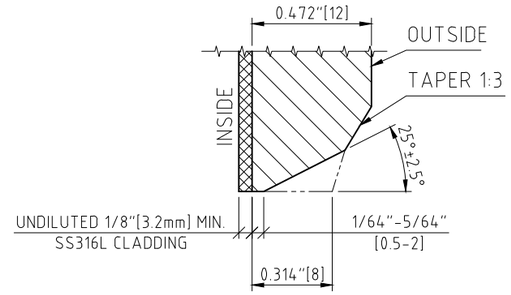

DETAIL AT - `A'
WEP FOR DISHED END

"AS BUILT"

ASME

REV. NO.	DESCRIPTION	DRAWN	CHKD.	APPD.	DATE
1	AS BUILT	RKC	AVM/SRW	BK	07-06-2023
0	ISSUED FOR APPROVAL	RKC	AVM/SAT	BK	21-02-2022

CLIENT : M/s. AIR PRODUCT, UK.

THIS DWG. IS THE PROPERTY OF PRAJ INDUSTRIES LTD. AND SHOULD NOT BE REPRODUCED WITHOUT WRITTEN CONSENT FROM

PRAJ INDUSTRIES LTD.
``PRAJ TOWER", Bhumkar Chowk, Hinjewadi, Pune-411 057. (INDIA)

TITLE : DISHED END DRAWING FOR 18-D-271 ARG1 AMINE REGEN REFLUX DRUM

DRG. PAPER SIZE: A3

SCALE NTS

PIL JOB CODE E-22064

DWG. NO. E-22064-ME-11-DED-0001

SHEET 1 OF 1

REV. 1

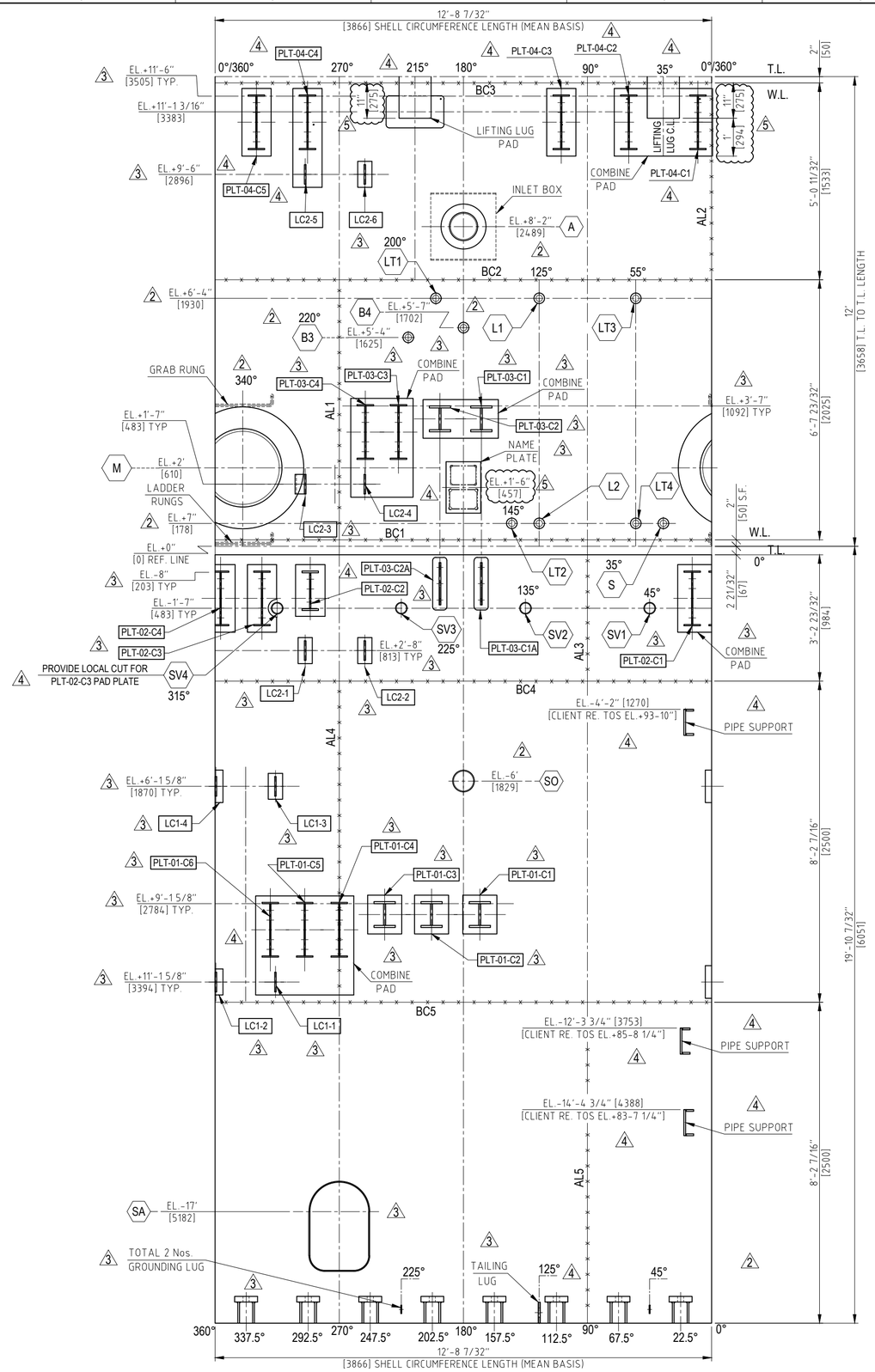

MAIN SHELL DEVELOPMENT DETAIL

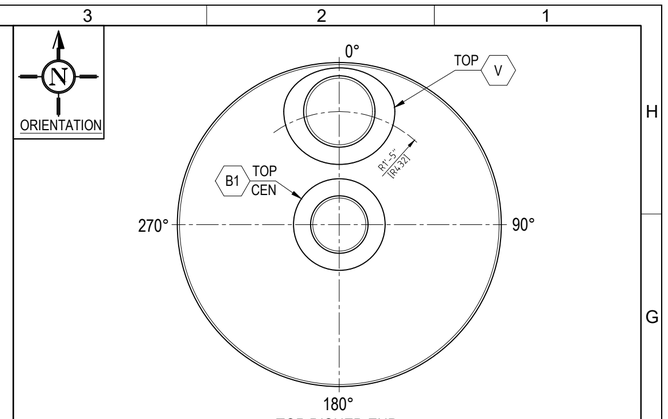

TOP DISHED END NOZZLE ORIENTATION

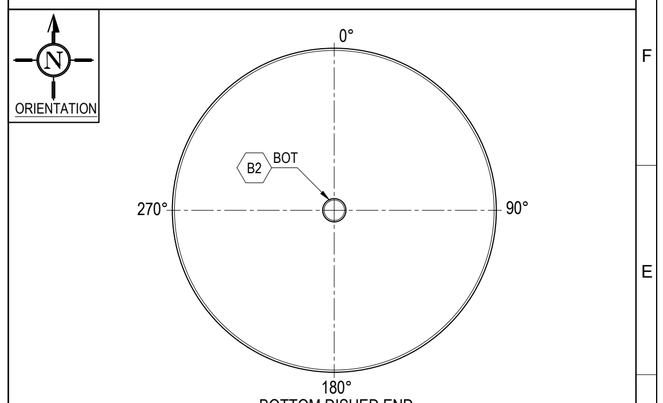

BOTTOM DISHED END NOZZLE ORIENTATION

NOTES :-

1) ALL DIMENSIONS ARE IN INCHES /(MM), UNLESS OTHERWISE SPECIFIED
2) THIS DRAWING TO BE READ IN CONJUNCTION WITH
   a) G.A. DRAWING NO : E-22064-ME-11-GAD-0001 (EN207122-PRAJ-9V3-00020)
   b) FAB. DRAWING NO : E-22064-ME-11-WFD-0001 (EN207122-PRAJ-9V3-00035)

"AS BUILT"

REV. NO.	DESCRIPTION	ZONE NO.	DRAWN	CHKD.	APPD.	DATE
5	AS BUILT	5-10 TO E-H	RKC	AVM/SRW	BK	07-06-2023
4	REVISED AS PER CLIENT COMMENTS	3-10 TO A-H	RKC	AVM/SRW	BK	14-04-2023
3	REVISED AS PER CLIENT COMMENTS	3-10 TO A-H	RKC	AVM/SAT	BK	03-11-2022
2	REVISED AS PER CLIENT COMMENTS	4-10 TO A-H	RKC	AVM/SAT	BK	29-06-2022
1	NOZZLE ELEVATION & ORIENTATION REVISED	1-10 TO A-H	RKC	AVM/SAT	BK	05-04-2022
0	ISSUED FOR APPROVAL	--	RKC	AVM/SAT	BK	01-12-2021

REVISIONS

MANUFACTURING ADDRESS :-
PRAJ INDUSTRIES LTD. SEZ UNIT-I,
PLOT NO.307 TO 314, SECTOR IV, KANDLA SPECIAL ECONOMIC ZONE,
GANDHIDHAM, KUTCH, GUJARAT, 370230, INDIA
MANUFACTURER'S SERIAL NUMBER :-
E-22064-18-D-271 (QTY - 1 No.)

ASME

AIR PRODUCTS

CLIENT : WORLD ENERGY PARAMOUNT
EQUIPMENT OWNER : AIR PRODUCTS MANUFACTURING LLC
PROJECT : WORLD ENERGY RENEWABLES PROJECT
PROJECT LOCATION : WORLD ENERGY, PARAMOUNT , CA, USA

P.O. NO. : 4505426379
PROJECT DOC. NO. : EN207122-PRAJ-9V3-00065
CLIENT REV. NO. :

THIS DWG. IS THE PROPERTY OF PRAJ INDUSTRIES LTD. AND SHOULD NOT BE REPRODUCED WITHOUT WRITTEN CONSENT FROM
PRAJ INDUSTRIES LTD.
``PRAJ TOWER", Bhumkar Chowk-Hinjewadi Road, Hinjewadi, Pune-411 057. (INDIA)

TITLE : DEVELOPEMENT DRAWING FOR 18-D-271 ARG1 AMINE REGEN REFLUX DRUM

DRAWING SIZE : A2
SCALE NTS
PIL JOB CODE E-22064-ME-11-DEV-0001
DWG. NO. E-22064-ME-11-DEV-0001
SHEET 1 OF 1
REV. 5

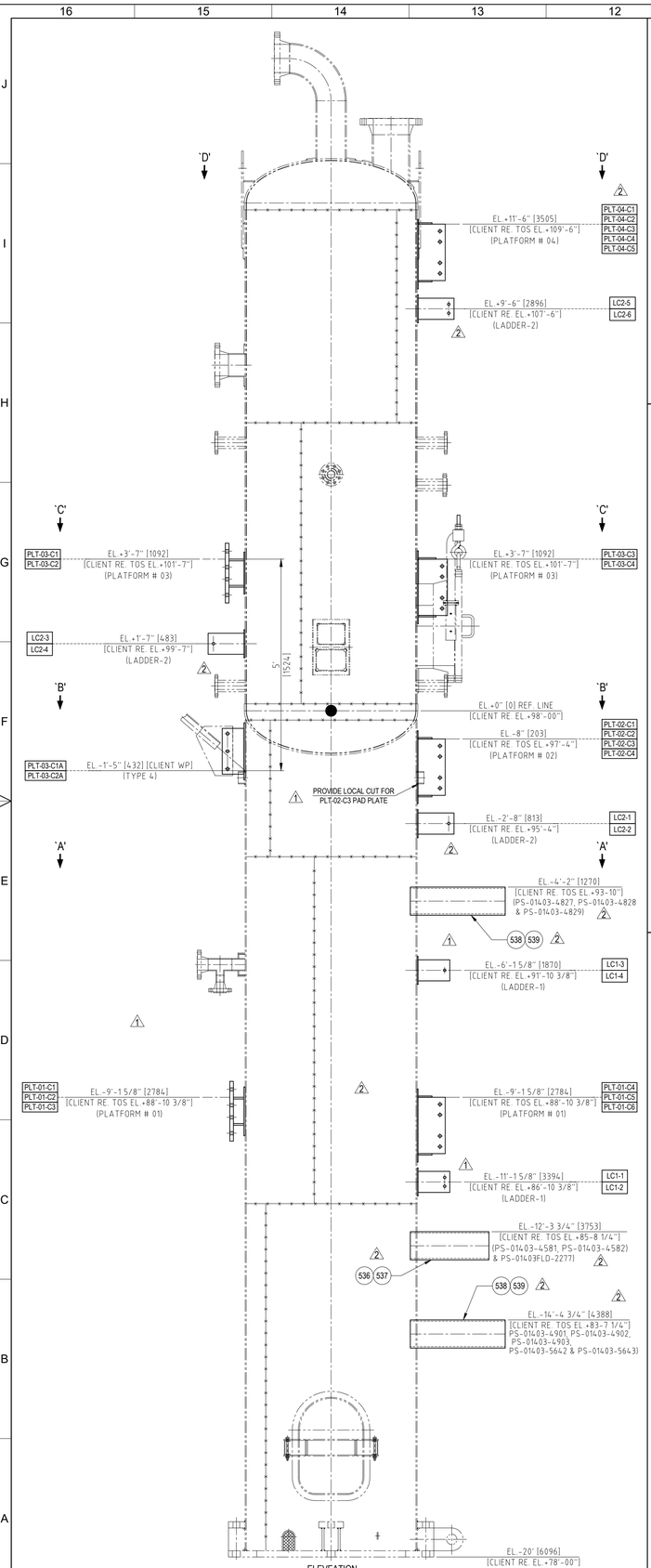

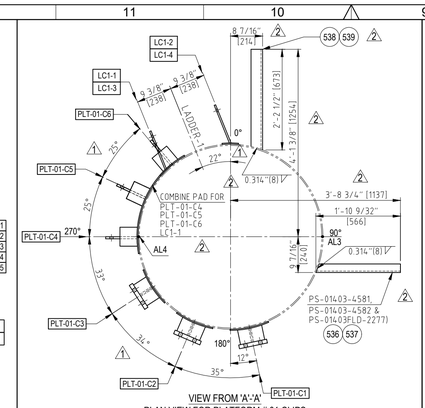

VIEW FROM 'A'-'A'
PLAN VIEW FOR PLATFORM # 01 CLIPS
CLIENT REF. TOS EL 88'+ 10 3/8"

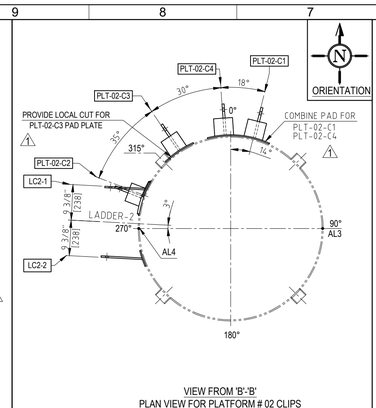

VIEW FROM 'B'-'B'
PLAN VIEW FOR PLATFORM # 02 CLIPS
CLIENT REF. TOS EL 97'+ 4"

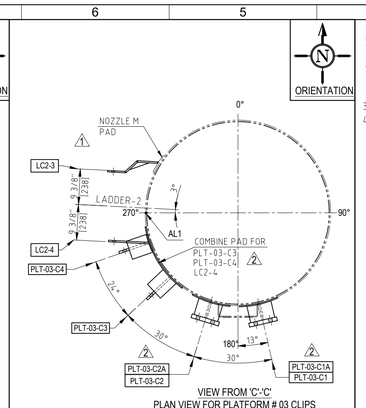

VIEW FROM 'C'-'C'
PLAN VIEW FOR PLATFORM # 03 CLIPS
CLIENT REF. TOS EL 101'+ 7"

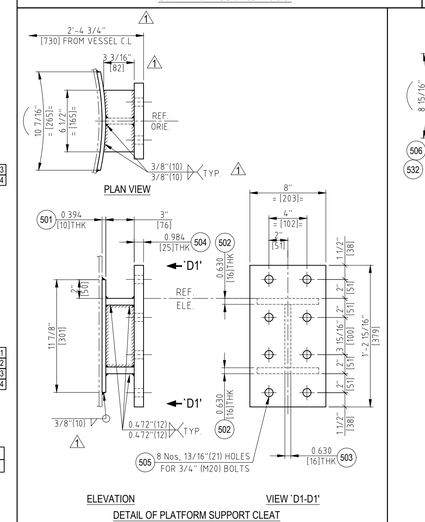

DETAIL OF PLATFORM SUPPORT CLEAT
PLT-01-C1 PLT-01-C2 PLT-01-C3

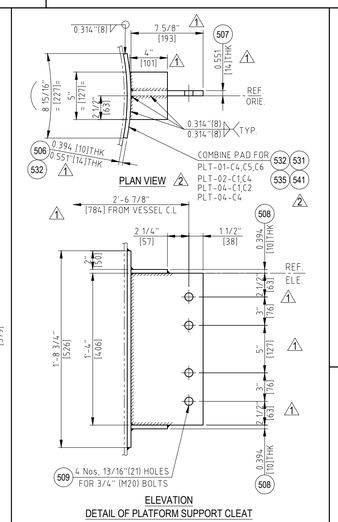

DETAIL OF PLATFORM SUPPORT CLEAT
PLT-01-C4 PLT-01-C5 PLT-01-C6
PLT-02-C1 PLT-02-C3 PLT-02-C4
PLT-04-C2 PLT-04-C3
PLT-04-C4 PLT-04-C5 PLT-04-C1

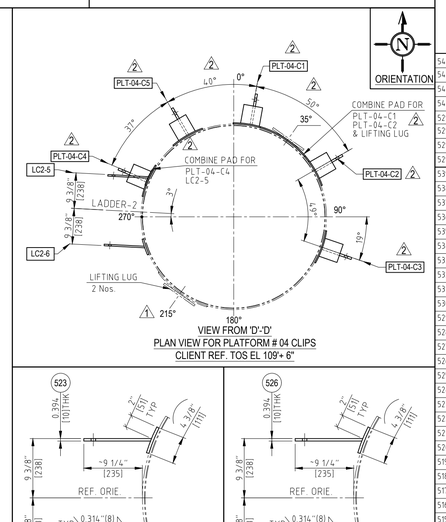

VIEW FROM 'D'-'D'
PLAN VIEW FOR PLATFORM # 04 CLIPS
CLIENT REF. TOS EL 109'+ 6"

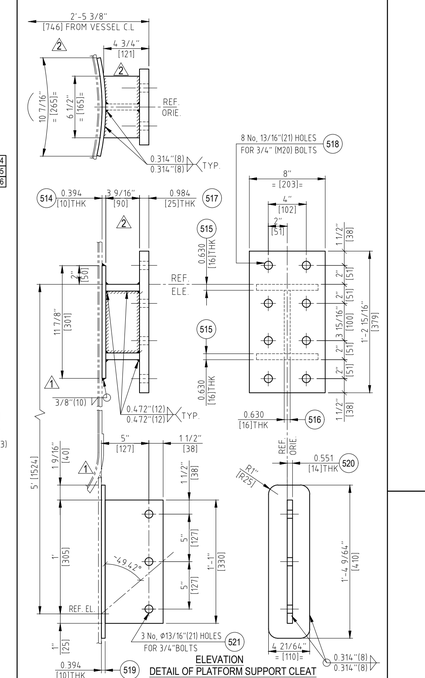

DETAIL OF PLATFORM SUPPORT CLEAT
PLT-03-C1 PLT-03-C2 PLT-03-C1A PLT-03-C2A

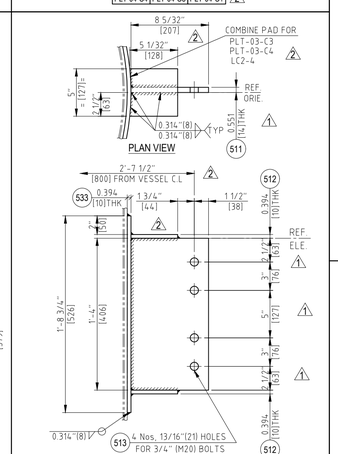

DETAIL OF PLATFORM SUPPORT CLEAT
PLT-03-C3 PLT-03-C4

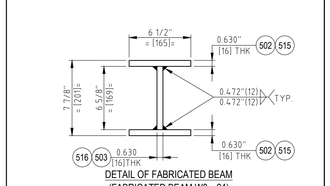

DETAIL OF FABRICATED BEAM
(FABRICATED BEAM W8 x 24)

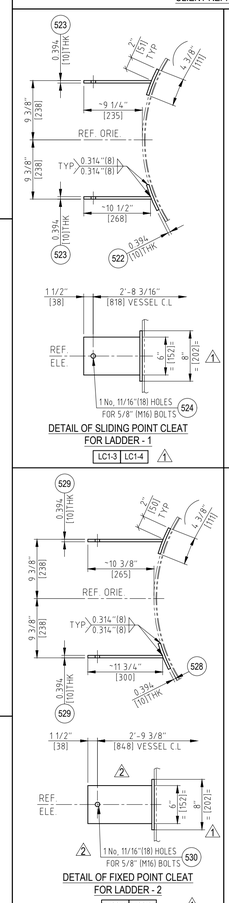

DETAIL OF SLIDING POINT CLEAT
FOR LADDER - 1
LC1-3 LC1-4

DETAIL OF SLIDING POINT CLEAT
FOR LADDER - 2
LC2-1 LC2-2

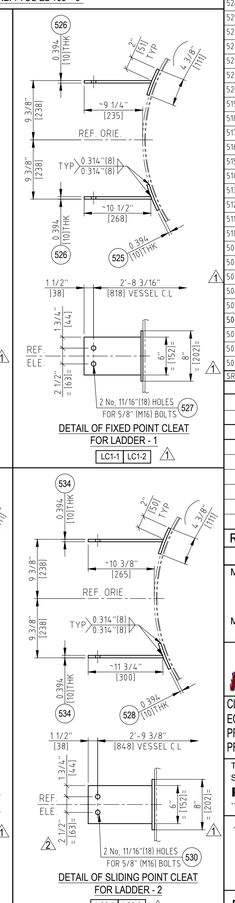

DETAIL OF FIXED POINT CLEAT
FOR LADDER - 1
LC1-1 LC1-2

DETAIL OF FIXED POINT CLEAT
FOR LADDER - 2
LC2-5 LC2-6

NOTES:-

1) ALL DIMENSIONS ARE IN INCHES /(MM), UNLESS OTHERWISE SPECIFIED
2) THIS DRAWING TO BE READ IN CONJUNCTION WITH
   a) G.A. DRAWING NO : E-22064-ME-11-GAD-0001 (EN207122-PRAJ-9V3-00020)
   b) FAB. DRAWING NO : E-22064-ME-11-WFD-0001 (EN207122-PRAJ-9V3-00035)
3) FILLET WELD SHALL BE 1/4"[6] mm (MINIMUM) UNLESS OTHERWISE SPECIFIED.
4) GIVEN BILL OF MATERIAL IS FOR 1 NO. EQUIPMENT ONLY & TOTAL EQUIPMENT QTY IS 1 No.

"AS BUILT"

SR NO	DESCRIPTION	QTY	UOM	MAT CODE	MATL DESC	SIZE (MM)	WT (KG)	REMARKS	TDC
543	BOLTING PLATE	1	EA	5185328	PLATE-SA516GR70-T14-TDC	279 x200x14	6.2	CUT TO SUIT	0003
542	TOP PLATE	2	EA	5185328	PLATE-SA516GR70-T14-TDC	127 x95x14	2.6	CUT TO SUIT	0003
541	COMBINE PAD	1	EA	5185328	PLATE-SA516GR70-T14-TDC 2	770 x230x14	19.5	CUT TO SUIT	0003
540	PAD PLATE	1	EA	5185328	PLATE-SA516GR70-T14-TDC	416 x226x14	10.3	CUT TO SUIT	0003
529D	GUSSET FOR LADDER PLATE	1	EA	5159591	PLATE-SA516GR70-T10-TDC	150x30x10	0.4	CUT TO SUIT	0003
529C	LADDER PLATE	1	EA	5159591	PLATE-SA516GR70-T10-TDC	140x152x10	1.6	CUT TO SUIT	0003
529B	LADDER PLATE	1	EA	5159591	PLATE-SA516GR70-T10-TDC	110x152x10	1.3	CUT TO SUIT	0003
529A	LADDER PLATE	1	EA	5159591	PLATE-SA516GR70-T10-TDC	125x152x10	1.4	CUT TO SUIT	0003
539	CHANNEL PLATE	2	EA	5185328	PLATE-SA516GR70-T14-TDC	700x203x14	30.8	CUT TO SUIT	0003
538	CHANNEL PLATE	4	EA	5185328	PLATE-SA516GR70-T14-TDC	700x63x14	18.5	CUT TO SUIT	0003
537	CHANNEL PLATE	1	EA	5159591	PLATE-SA516GR70-T10-TDC	600x203x10	11	CUT TO SUIT	0003
536	CHANNEL PLATE	2	EA	5159591	PLATE-SA516GR70-T10-TDC 2	600x48x10	5.5	CUT TO SUIT	0003
535	COMBINE PAD	1	EA	5159591	PLATE-SA516GR70-T10-TDC	430x526x10	17.8	CUT TO SUIT	0003
534	LADDER PLATE	2	EA	5159591	PLATE-SA516GR70-T10-TDC	300x152x10	2.3.4	CUT TO SUIT	0003
533	COMBINE PAD 1	1	EA	5159591	PLATE-SA516GR70-T10-TDC	485x770x10	29.3	CUT TO SUIT	0003
532	COMBINE PAD	1	EA	5185328	PLATE-SA516GR70-T14-TDC 2	786 x500x14	43.2	CUT TO SUIT	0003
531	COMBINE PAD	1	EA	5159591	PLATE-SA516GR70-T10-TDC	770x770x10	46.5	CUT TO SUIT	0003
530	HEX BOLT+NUT+WASHER	12	SET	5184944	HEXBOLT-N-2W-F3125-A563-F959-5/8X60 LG.			STD.	N.A.
529	LADDER PLATE 1	4	EA	5159591	PLATE-SA516GR70-T10-TDC	300x152x10	2.3.4	CUT TO SUIT	0003
528	PAD PLATE FOR LADDER - 2	5	EA	5159591	PLATE-SA516GR70-T10-TDC 1	205x111x10	11.8	CUT TO SUIT	0003
527	HEX BOLT+NUT+WASHER	8	SET	5184944	HEXBOLT-N-2W-F3125-A563-F959-5/8X60 LG.			STD.	N.A.
526	LADDER PLATE	2	EA	5159591	PLATE-SA516GR70-T10-TDC	268x152x10	5.6	CUT TO SUIT	0003
525	PAD PLATE FOR LADDER - 1	2	EA	5159591	PLATE-SA516GR70-T10-TDC 1	205x111x10	3.9	CUT TO SUIT	0003
524	HEX BOLT+NUT+WASHER	4	SET	5184944	HEXBOLT-N-2W-F3125-A563-F959-5/8X60 LG.			STD.	N.A.
523	LADDER PLATE	2	EA	5159591	PLATE-SA516GR70-T10-TDC	268x152x10	5.6	CUT TO SUIT	0003
522	PAD PLATE FOR LADDER - 1	2	EA	5159591	PLATE-SA516GR70-T10-TDC 2	205x111x10	3.9	CUT TO SUIT	0003
521	HEX BOLT+NUT+WASHER	6	SET	5184944	HEXBOLT-N-2W-F3125-A563-F959-5/8X60 LG.			STD.	N.A.
520	BOLTING PLATE	2	EA	5185328	PLATE-SA516GR70-T14-TDC	330 x 165x 14	11.9	CUT TO SUIT	0003
519	PAD PLATE	2	EA	5159591	PLATE-SA516GR70-T10-TDC	410 x 110 x 10	7.2	CUT TO SUIT	0003
518	HEX BOLT+NUT+WASHER	16	SET	5184942	HEXBOLT-N-2W-F3125-A563-F959-3/4X90 LG.			STD.	N.A.
517	END PLATE	2	EA	5146917	PLATE-SA 516GR70-T25-TDC	379x203x25	7.4	CUT TO SUIT	0003
516	BEAM PLATE	2	EA	5159594	PLATE-SA516GR70-T16-TDC	170x100x16	7.6	CUT TO SUIT	0002
515	BEAM PLATE	4	EA	5159594	PLATE-SA516GR70-T16-TDC 1	165x120x16	14.5	CUT TO SUIT	0002
514	PAD PLATE	2	EA	5159591	PLATE-SA516GR70-T10-TDC	301x265x10	10.15	CUT TO SUIT	0003
513	HEX BOLT+NUT+WASHER	8	SET	5184942	HEXBOLT-N-2W-F3125-A563-F959-3/4X90 LG.			STD.	N.A.
512	SUPPORT PLATE	4	EA	5159591	PLATE-SA516GR70-T10-TDC 1	128x127x10	5.6	CUT TO SUIT	0003
511	BOLTING PLATE	2	EA	5185328	PLATE-SA516GR70-T14-TDC	406x220x14	20.1	CUT TO SUIT	0003
510	DELETED 1								
509	HEX BOLT+NUT+WASHER	52	SET	5184942	HEXBOLT-N-2W-F3125-A563-F959-3/4X90 LG.			STD.	N.A.
508	SUPPORT PLATE	26	EA	5159591	PLATE-SA516GR70-T10-TDC 1	127x110x10	31.8	CUT TO SUIT	0003
507	BOLTING PLATE	13	EA	5185328	PLATE-SA516GR70-T14-TDC	406x200x14	115	CUT TO SUIT	0003
506	PAD PLATE 2	3	EA	5159591	PLATE-SA516GR70-T10-TDC	526x227x10	4.5	CUT TO SUIT	0003
505	HEX BOLT+NUT+WASHER	24	SET	5184942	HEXBOLT-N-2W-F3125-A563-F959-3/4X90 LG.		1	STD.	N.A.
504	END PLATE	3	EA	5146917	PLATE-SA 516GR70-T25-TDC	379x203x25	7.4	CUT TO SUIT	0003
503	BEAM PLATE	3	EA	5159594	PLATE-SA516GR70-T16-TDC	170x100x16	7.6	CUT TO SUIT	0002
502	BEAM PLATE	6	EA	5159594	PLATE-SA516GR70-T16-TDC	165x100x16	14.5	CUT TO SUIT	0002
501	PAD PLATE	3	EA	5159591	PLATE-SA516GR70-T10-TDC	301x265x10	15.22	CUT TO SUIT	0003

BILL OF MATERIAL

SALES ORDER No.	ITEM No.	MATERIAL No.
30002551	10	9006696

REV. NO.	DESCRIPTION	ZONE NO.	DRAWN	CHKD.	APPD.	DATE
-	-	-	PK	[illegible]	[illegible]	-
3	AS BUILT	--	RKC	AVM/SRW	BK	07-06-2023
2	REVISED AS PER CLIENT COMMENTS	--	RKC	AVM/SRW	BK	14-04-2023
1	REVISED AS PER CLIENT COMMENTS	-	RKC	AVM/SRW	BK	21-12-2022
0	ISSUED FOR APPROVAL	--	NSM	AVM/SAT	BK	01-08-2022

REVISIONS

MANUFACTURING ADDRESS :-
PRAJ INDUSTRIES LTD. SEZ UNIT-I,
PLOT NO.307 TO 314, SECTOR IV, KANDLA SPECIAL ECONOMIC ZONE,
GANDHIDHAM, KUTCH, GUJARAT, 370230, INDIA
MANUFACTURER'S SERIAL NUMBER :-
E-22064-18-D-271 (QTY - 1 No.)

ASME

AIR PRODUCTS

CLIENT : WORLD ENERGY PARAMOUNT
EQUIPMENT OWNER : AIR PRODUCTS MANUFACTURING LLC
PROJECT : WORLD ENERGY RENEWABLES PROJECT
PROJECT LOCATION : WORLD ENERGY, PARAMOUNT , CA, USA

P.O. NO. : 4505426379
PROJECT DOC. NO. EN207122-PRAJ-9V3-00124
CLIENT REV. NO.

THIS DWG. IS THE PROPERTY OF PRAJ INDUSTRIES LTD. AND
SHOULD NOT BE REPRODUCED WITHOUT WRITTEN CONSENT FROM
PRAJ INDUSTRIES LTD.
"PRAJ TOWER", Bhumkar Chowk-Hinjewadi Road, Hinjewadi, Pune-411 057. (INDIA)

praj

TITLE : EXTERNAL ATTACHMENT DRAWING FOR 18-D-271 ARG1 AMINE REGEN REFLUX DRUM

DRAWING SIZE : A1
SCALE NTS
PIL JOB CODE E-22064-ME-11-EAD-0001

DWG. NO. E-22064-ME-11-EAD-0001
SHEET 1 OF 2
REV. 0 1 2 3

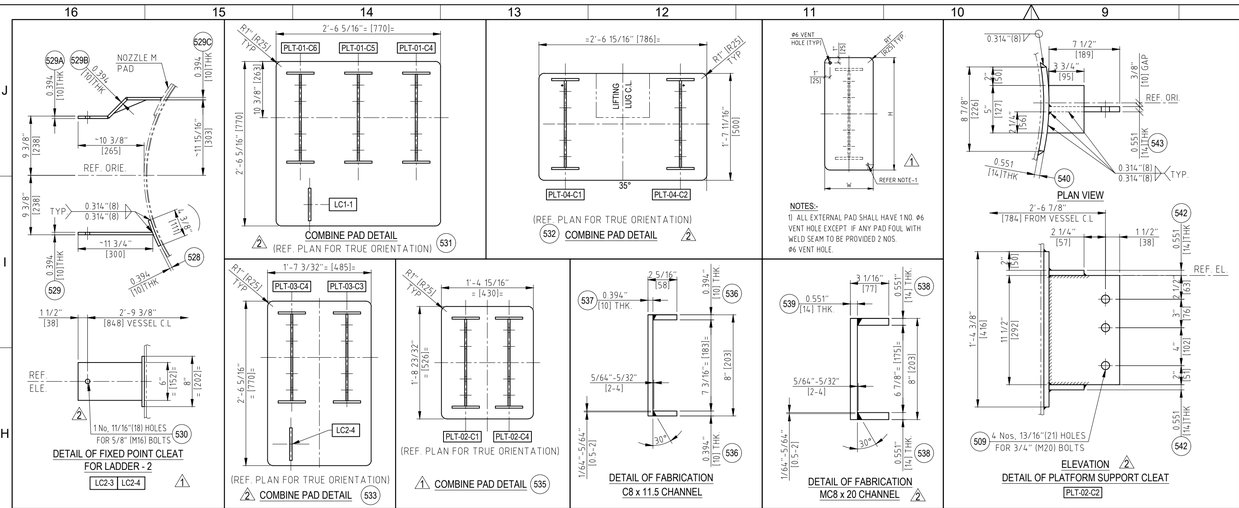

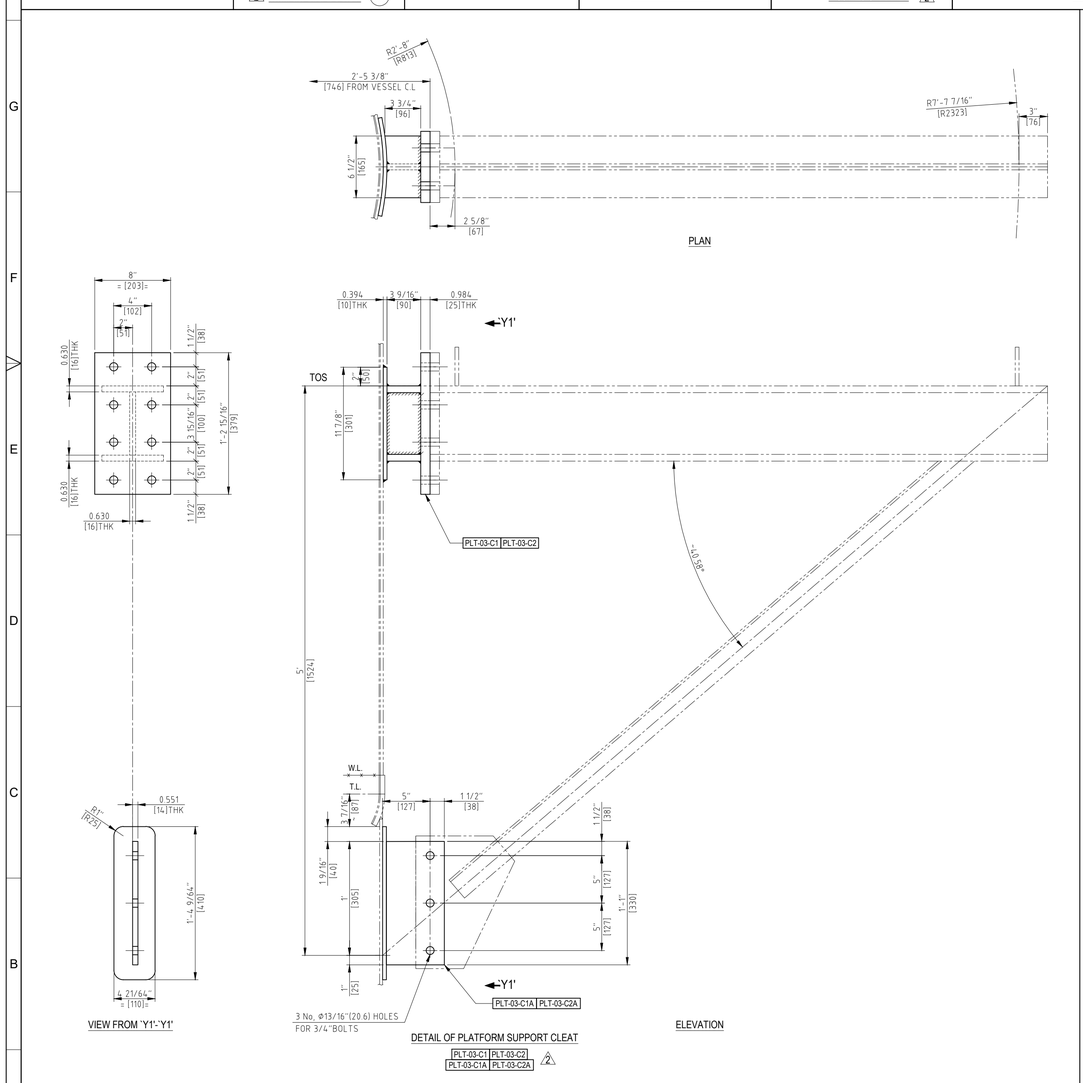

"AS BUILT"

REV. NO.	DESCRIPTION	ZONE NO.	DRAWN	CHKD.	APPD.	DATE
-	-	-				-
3	AS BUILT	--	RKC	AVM/SRW	BK	07-06-2023
2	REVISED AS PER CLIENT COMMENTS	--	RKC	AVM/SRW	BK	14-04-2023
1	REVISED AS PER CLIENT COMMENTS	-	RKC	AVM/SRW	BK	21-12-2022
0	ISSUED FOR APPROVAL	--	NSM	AVM/SAT	BK	01-08-2022

REVISIONS

MANUFACTURING ADDRESS :-
PRAJ INDUSTRIES LTD. SEZ UNIT-I,
PLOT NO.307 TO 314, SECTOR IV, KANDLA SPECIAL ECONOMIC ZONE,
GANDHIDHAM, KUTCH, GUJARAT, 370230, INDIA
MANUFACTURER'S SERIAL NUMBER :-
E-22064-18-D-271 (QTY - 1 No.)

ASME

AIR PRODUCTS

CLIENT : WORLD ENERGY PARAMOUNT
EQUIPMENT OWNER : AIR PRODUCTS MANUFACTURING LLC
PROJECT : WORLD ENERGY RENEWABLES PROJECT
PROJECT LOCATION : WORLD ENERGY, PARAMOUNT , CA, USA

P.O. NO. : 4505426379
PROJECT DOC. NO. EN207122-PRAJ-9V3-00124
CLIENT REV. NO.

THIS DWG. IS THE PROPERTY OF PRAJ INDUSTRIES LTD. AND SHOULD NOT BE REPRODUCED WITHOUT WRITTEN CONSENT FROM
PRAJ INDUSTRIES LTD.
``PRAJ TOWER", Bhumkar Chowk-Hinjewadi Road, Hinjewadi, Pune-411 057. (INDIA)

praj

TITLE : EXTERNAL ATTACHMENT DRAWING FOR 18-D-271 ARG1 AMINE REGEN REFLUX DRUM

DRAWING SIZE : A1

SCALE NTS

PIL JOB CODE E-22064-ME-11-EAD-0001

DWG. NO. E-22064-ME-11-EAD-0001

SHEET 2 OF 2

REV. 0 1 2 3

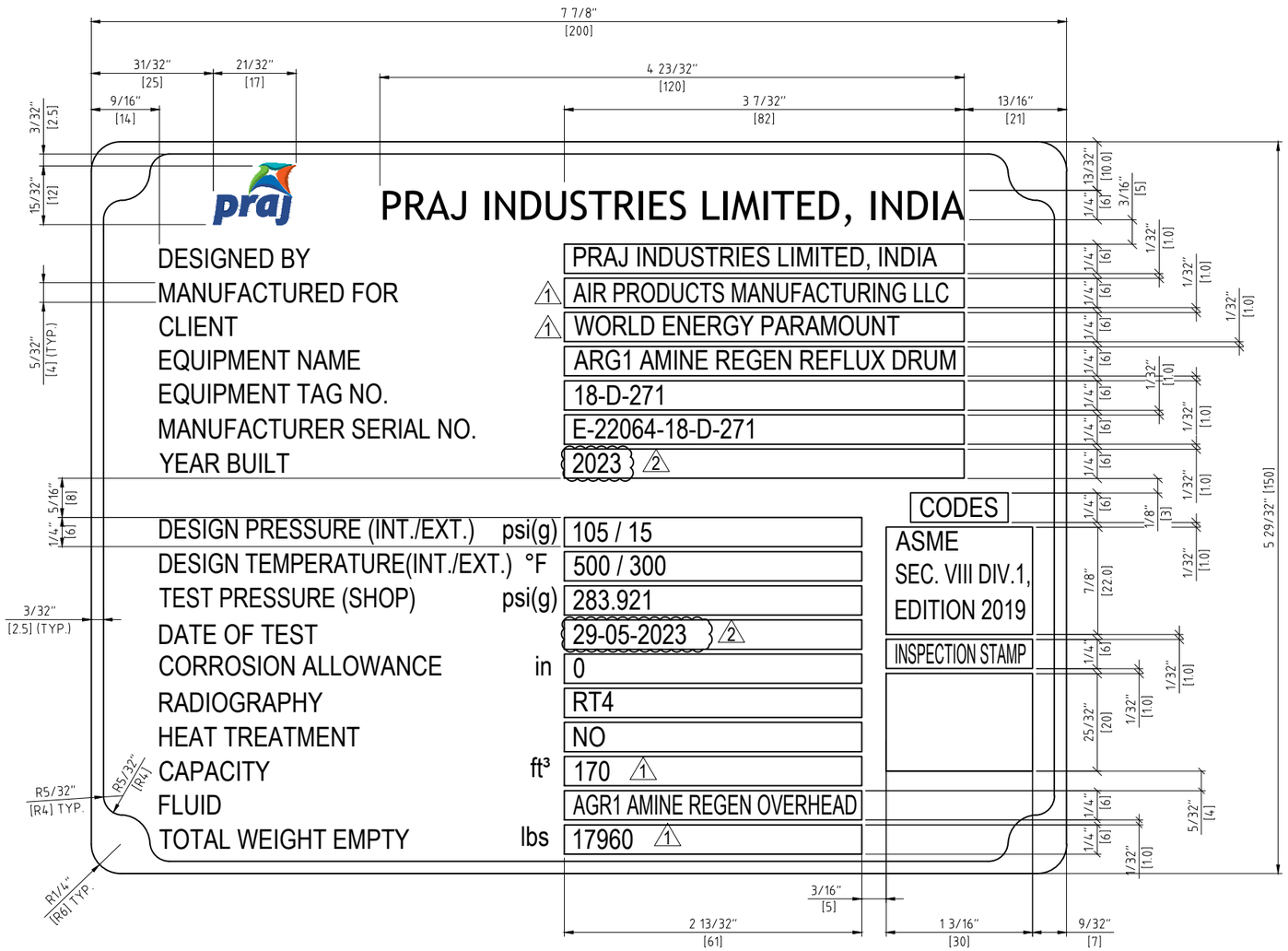

MFG. NAME PLATE DETAILS

NOTES :-

1) ALL DIMENSIONS ARE IN INCH/(MM) UNLESS OTHERWISE SPECIFIED.
2) TEXT ON THE NAME PLATE SHALL BE INDENTED BY ETCHING. AND LETTER SHALL BE BLACK COLOUR MIN. CHARACTER SIZE SHALL BE 0.1575"[4 mm] & DEPTH OF INDENTATION SHALL BE MIN. 0.01"[0.25mm]. (e.g.- Pressure) 4 mm
3) MATERIAL OF CONSTRUCTION OF NAME PLATE - AISI304
4) REFER G.A. DRAWING NUMBER : E-22064-ME-11-GAD-0001 (EN207122-PRAJ-9V3-00020)
5) NAME PLATE THICKNESS 0.0788" [2mm].
6) TOTAL QTY.- 01 No.
7) ** YEAR OF BUILT SHALL CORRESPOND TO THE DATE OF APPLYING "CODE STAMP" AND SHALL BE HARD PUNCHED PHYSICALLY.
8) LETTERS SHALL BE AS FOLLOWS :-
   PRAJ INDUSTRIES LTD. : TREBUCHET MS.
   OTHERS : ARIAL NARROW (EXCEPT "LOGO", WHICH WILL BE AS PER PRAJ NORMS)
9) NAME PLATE SHALL BE RIVETED TO BRACKET.
10) * ACTUAL DATE SHALL BE PUNCHED (ENGRAVING OR HARD STAMPING) AFTER HYDRO TESTING IN DD-MM-YYYY FORMAT & MUST BE CLEARLY LEGIBLE.
11) INSPECTION STAMP SHALL BE HARD PUNCH AFTER OBTAINING APPROVAL FROM AI.

"AS BUILT"

ASME

REV. NO.	DESCRIPTION	DRAWN	CHKD.	APPD.	DATE
2	AS BUILT	RKC	AVM/SRW	BK	07-06-2023
1	REVISED AS PER CLIENT COMMENTS	RKC	AVM/SAT	BK	05-07-2022
0	ISSUED FOR APPORVAL	RKC	AVM/SAT	B.K.	04-01-2022

AIR PRODUCTS 1 1

CLIENT : WORLD ENERGY PARAMOUNT
EQUIPMENT OWNER : AIR PRODUCTS MANUFACTURING LLC
PROJECT : WORLD ENERGY RENEWABLES PROJECT
PROJECT LOCATION : WORLD ENERGY, PARAMOUNT , CA, USA

P.O. NO. : 4505426379
CLIENT DOC. NO. : EN207122-PRAJ-9V3-00066
CLIENT REV. NO.

THIS DWG. IS THE PROPERTY OF PRAJ INDUSTRIES LTD. AND SHOULD NOT BE REPRODUCED WITHOUT WRITTEN CONSENT FROM
PRAJ INDUSTRIES LTD.
``PRAJ TOWER", Bhumkar Chowk, Hinjewadi, Pune-411 057. (INDIA)

TITLE : NAME PLATE DETAIL DRAWING FOR 18-D-271 ARG1 AMINE REGEN REFLUX DRUM

DRG. PAPER SIZE: A3

SCALE NTS

PIL JOB CODE E-22064

DWG. NO. E-22064-ME-11-NPD-0001

SHEET 1 OF 2

REV. 2

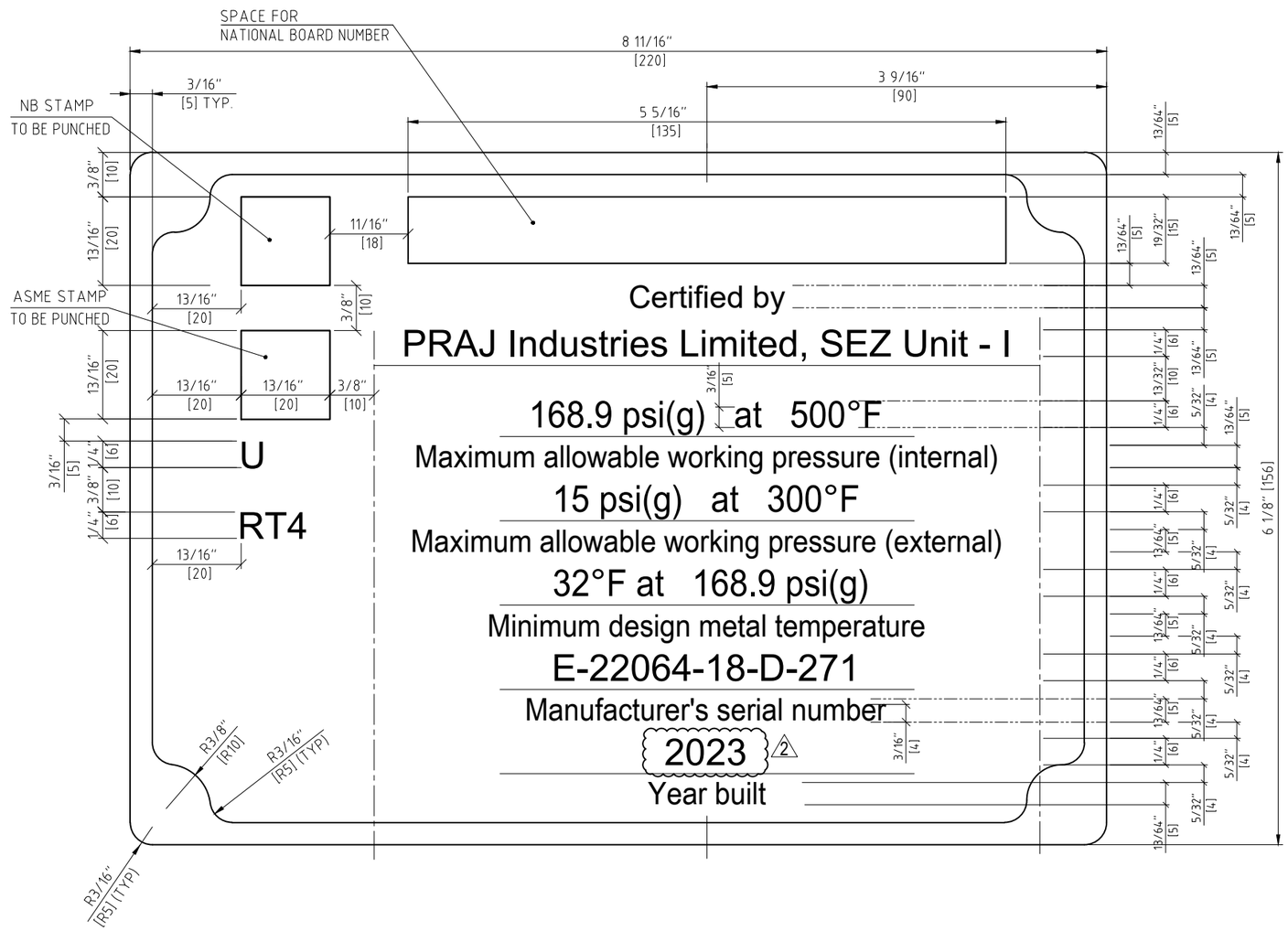

ASME NAME PLATE DETAIL

NOTES :-

1) ALL DIMENSIONS ARE IN INCH/(MM) UNLESS OTHERWISE SPECIFIED.
2) TEXT ON THE NAME PLATE SHALL BE INDENTED BY ETCHING. AND LETTER SHALL BE BLACK COLOUR
3) MIN. CHARACTER SIZE SHALL BE 0.1575"[4 mm] & DEPTH OF INDENTATION SHALL BE MIN. 0.01"[0.25mm]. (e.g.- Pressure
4) MATERIAL OF CONSTRUCTION OF NAME PLATE - AISI304
5) ASME CERTIFICATION SYMBOL STAMP TO BE PUNCHED AFTER OBTAINING AUTHORIZATION FROM 'AI' AND IN HIS PRESENCE.
6) REFER G.A. DRAWING NUMBER : E-22064-ME-11-GAD-0001 (EN207122-PRAJ-9V3-00020)
7) NAME PLATE THICKNESS 0.0788" [2mm].
8) TOTAL QTY.- 01 NO.
9) ** YEAR OF BUILT SHALL CORRESPOND TO THE DATE OF APPLYING "CODE STAMP" AND SHALL BE HARD PUNCHED PHYSICALLY.
10) NATIONAL BOARD SYMBOL SHALL BE HARD PUNCH AFTER OBTAINING APPROVAL FROM AI.
11) NATIONAL BOARD SR. NO. TO BE ALLOCATED BY MANAGER Q.A.C. AND SHALL BE HARD PUNCHED USING LETTERS OF AT LEAST 0.236" [6MM] HEIGHT.
12) LETTERS SHALL BE AS FOLLOWS :-
PRAJ INDUSTRIES LTD. : TREBUCHET MS.
OTHERS : ARIAL NARROW

"AS BUILT"

ASME

REV. NO.	DESCRIPTION	DRAWN	CHKD.	APPD.	DATE
2	AS BUILT	RKC	AVM/SRW	BK	07-06-2023
1	REVISED AS PER CLIENT COMMENTS	RKC	AVM/SAT	BK	05-07-2022
0	ISSUED FOR APPORVAL	RKC	AVM/SAT	B.K.	04-01-2022

AIR PRODUCTS

CLIENT : WORLD ENERGY PARAMOUNT
EQUIPMENT OWNER : AIR PRODUCTS MANUFACTURING LLC
PROJECT : WORLD ENERGY RENEWABLES PROJECT
PROJECT LOCATION : WORLD ENERGY, PARAMOUNT , CA, USA

P.O. NO. : 4505426379
CLIENT DOC. NO. : EN207122-PRAJ-9V3-00066
CLIENT REV. NO.

THIS DWG. IS THE PROPERTY OF PRAJ INDUSTRIES LTD. AND SHOULD NOT BE REPRODUCED WITHOUT WRITTEN CONSENT FROM
PRAJ INDUSTRIES LTD.
``PRAJ TOWER", Bhumkar Chowk, Hinjewadi, Pune-411 057. (INDIA)

TITLE : NAME PLATE DETAIL DRAWING FOR 18-D-271 ARG1 AMINE REGEN REFLUX DRUM

DRG. PAPER SIZE: A3

SCALE NTS

PIL JOB CODE E-22064

DWG. NO. E-22064-ME-11-NPD-0001

SHEET 2 OF 2

REV. 2

LRQA Verification Limited
Name: Vikul Kumar Tyagi
Date: 10 June 2023
Ref No.: AHM2100247
Office: Vadodara
Signature:
A member of the LRQA Group Limited

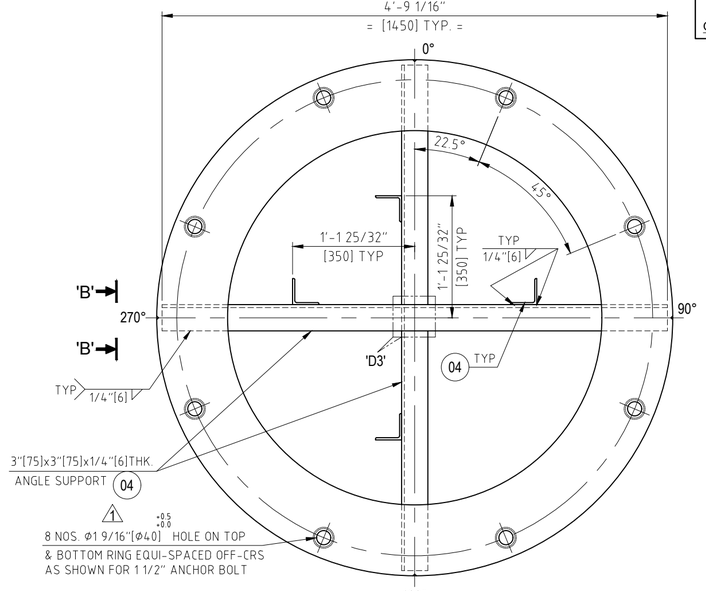

VIEW FROM `A'-`A'

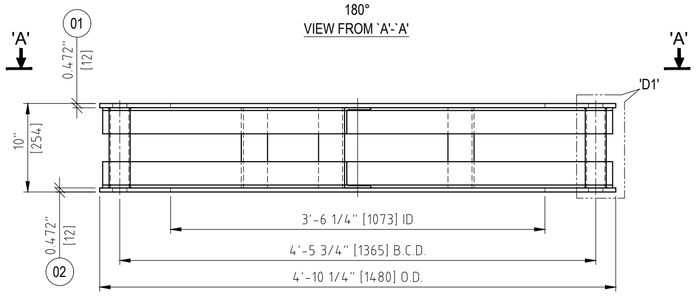

ELEVATION

TEMPLATE DETAIL

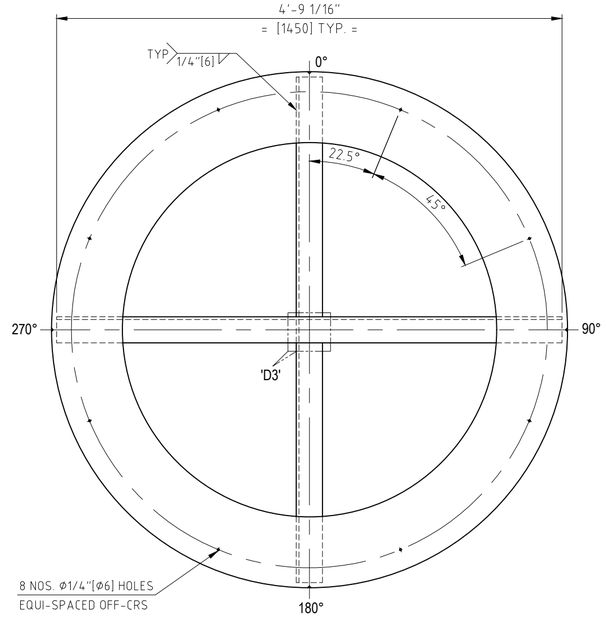

PLAN

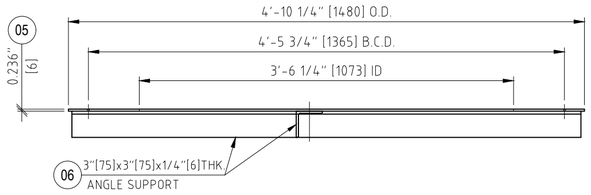

ELEVATION

GAUGE PLATE DETAIL

NOTES :-

1. ALL DIMENSION ARE IN INCHES [mm]. UNLESS OTHERWISE SPECIFIED.
2. ANCHOR BOLT HOLES IN BOX TEMPLATE & BASE RING OF VESSEL SHALL BE DRILLED USING SAME GAUGE PLATE.
3. MARKING - THE TOP SURFACE ONLY OF THE ANCHOR BOLT TEMPLATE SHALL BE PAINTED BLACK THEN THE FOLLOWING SHALL BE MARKED ON THE TOP SURFACE OF ANCHOR BOLT TEMPLATE AND GAUGE PLATE.
   i) EQUIPMENT NUMBER SHALL BE MARKED WITH BOTH DIE STAMP & WHITE PAINT.
   ii) 0°,90°,180° & 270° SHALL BE MARKED ON THE TOP OF THE TEMPLATE AT THEIR RESPECTIVE NOTCH LOCATIONS AS WELL AS EQUIPMENT TAG NO USING BLACK PAINT OR PERMANENT MARKER. THE TEMPLATE PAIRS SHALL ALSO BE MARKED SO THEY CAN BE CORRECTLY PAIRED WHEN REASSEMBLED.
   iii) ORIENTATION NOTCHES CUT PERPENDICULARLY AS SHOWN. 1
   iv) MARK "NORTH" AND "THIS SIDE UP" , TAG NUMBER OF THE EQUIPMENT , TEMPLATE WEIGHT IN LBS ON THE TEMPLATE
4. FOR GENERAL ASSEMBLY REFER DRG. NO. E-22064-ME-11-GAD-0001 (EN207122-PRAJ-9V3-00020) BEFORE DRILLING OF TEMPLATE.
5. FOR DIVIDED TYPE CONSTRUCTION OF ANCHOR BOLT TEMPLATE, THE BOLT HOLES SHALL BE MADE IN THE FULLY ASSEMBLED CONDITION AFTER SECTIONING.
6. THE ANCHOR BOLT TEMPLATE SHALL BE DELIVERED TO SITE IN ADVANCE OF THE SHIPMENT OF VESSEL AND PRIOR TO THE COMMENCEMENT OF THE FOUNDATION INSTALLATION.
7. GAUGE PLATE FOR USE AT SHOP SHALL NOT BE SUPPLIED AT SITE.
8. THE BOTTOM SURFACE FLATNESS OF THE TEMPLATE SHALL BE WITHIN 1/4"[6] mm AFTER WELDING OF THE ANGLE SUPPORT IS COMPLETED.
9. GIVEN BILL OF MATERIAL FOR 1 EQUIPMENT ONLY & TOTAL QTY :- 1 No.
10. FILLET WELD SHALL BE 1/4"[6] mm (MINIMUM) UNLESS OTHERWISE SPECIFIED.
11. WELD SEAMS OF RING SEGMENTS SHALL NOT COINCIDE WITH THE BOLT HOLES

12. PAINTING :-

TEMPLATE & GAUGE PLATE TO BE PAINTED USING CQ93U-1 OR BETTER PAINT CODE FROM 4WEQ-6804. COLOR SHALL BE WHITE OR YELLOW GRAY.

AIR PRODUCTS APPLICABLE SPECIFICATION:-

4WGN-10001 :- SHIPMENT AND PACKING SPECIFICATION FOR EQUIPMENT AND MATERIALS

DESCRIPTION OF DIMENSIONAL CHECK	TOLERANCE
TEMPLATE / GAUGE PLATE BOLT CIRCLE DIAMETER	+ / - 1 mm
TEMPLATE / GAUGE PLATE OD	+ / - 5 mm
TEMPLATE / GAUGE PLATE ID	+ / - 5 mm
BOLT HOLE DIAMETER	+0.5 / -0 mm
ORIENTATION OF NOTCHES / BOLT HOLES	+ / - 2 mm
ALIGNMENT OF BOLT HOLES BETWEEN UPPER AND BOTTOM PLATE FOR ANGLE SUPPORT TYPE PLATES.	+ / - 2 mm IN ANY PLATE

GAUGE PLATE WEIGHT= 64 Kg APPROX.

ANCHOR BOLT TEMPLATE WEIGHT= 229 Kg APPROX.

BILL OF MATERIAL

NO	DESCRIPTION	QTY	UOM	MAT.CODE	MATL. DESC	SIZE (MM)	(KG)	REMARKS	TDC
06	SUPP. ANGLE GAUGE	25	KG	5008159	ANGLE-IS2062-E250-A-ISA75-T6	3000 LG	25	CUT TO SUIT	N.A.
05	GAUGE PLATE	1	EA	5189260	PLATE-IS2062-E250-GR.A-T6	O.D.1480 x I.D.1073 x 6	39	RING IN SECTOR	N.A.
04	ANGLE SUPPORT	60	KG	5008159	ANGLE-IS2062-E250-BR-ISA75-T6	8000 LG	60	CUT TO SUIT	N.A.
03	SUPPORT PIPE	2.2	M	5005488	PIPE-WLD-PE-IS1239-50NB-MEDIUM		15	CUT TO SUIT	N.A.
02	BOTTOM PLATE	1	EA	5189263	PLATE-IS2062-E250-GR.A-T12	O.D.1480 x I.D.1073 x 12	77	RING IN SECTOR	N.A.
01	TOP PLATE	1	EA	5189263	PLATE-IS2062-E250-GR.A-T12	O.D.1480 x I.D.1073 x 12	77	RING IN SECTOR	N.A.

SALES ORDER No	Item No.	Material No.
30002551	70	9002649

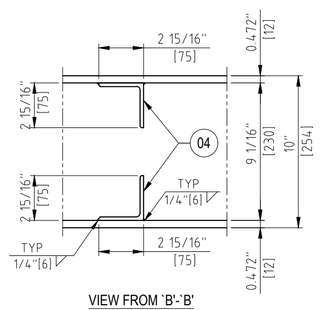

VIEW FROM `B'-`B'

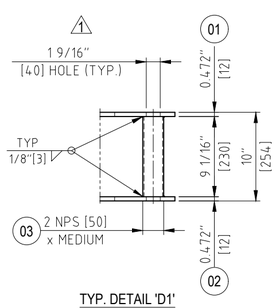

TYP. DETAIL 'D1'

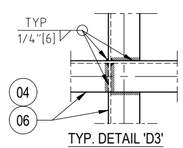

TYP. DETAIL 'D3'

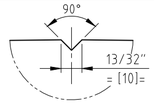

(0°,90°,180° & 270°)

TYP. NOTCH DETAIL FOR TEMPLATE

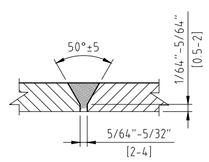

TYP. SEGMENT WELD DETAIL

"AS BUILT"

REV. NO.	DESCRIPTION	ZONE NO.	DRAWN	CHKD.	APPD.	DATE
2	AS BUILT	--	RKC	AVM/SRW	BK	07-06-2023
1	TOP & BOT. PLATE HOLE SIZE & NOTES REVISED.	1-10 TO A-G	RKC	AVM/SAT	BK	05-04-2022
0	ISSUED FOR APPROVAL	--	RKC	AVM/SAT	BK	01-12-2021

REVISIONS

MANUFACTURING ADDRESS :-
PRAJ INDUSTRIES LTD. SEZ UNIT-I,
PLOT NO.307 TO 314, SECTOR IV, KANDLA SPECIAL ECONOMIC ZONE,
GANDHIDHAM, KUTCH, GUJARAT, 370230, INDIA
MANUFACTURER'S SERIAL NUMBER :-
E-22064-18-D-271 (QTY - 1 No.)

ASME

AIR PRODUCTS

CLIENT : WORLD ENERGY PARAMOUNT 1 1
EQUIPMENT OWNER : AIR PRODUCTS MANUFACTURING LLC
PROJECT : WORLD ENERGY RENEWABLES PROJECT
PROJECT LOCATION : WORLD ENERGY, PARAMOUNT , CA, USA

P.O. NO. : 4505426379
PROJECT DOC. NO. : EN207122-PRAJ-9V3-00099
CLIENT REV. NO. :

THIS DWG. IS THE PROPERTY OF PRAJ INDUSTRIES LTD. AND SHOULD NOT BE REPRODUCED WITHOUT WRITTEN CONSENT FROM
PRAJ INDUSTRIES LTD.
``PRAJ TOWER", Bhumkar Chowk-Hinjewadi Road, Hinjewadi, Pune-411 057. (INDIA)

TITLE : TEMPLATE DRAWING FOR ARG1 AMINE REGEN REFLUX DRUM TAG NO. 18-D-271

DRAWING SIZE : A2

SCALE NTS

PIL JOB CODE E-22064-ME-11-TEM-0001

DWG. NO. E-22064-ME-11-TEM-0001

SHEET 1 OF 1

REV. 0 1 2

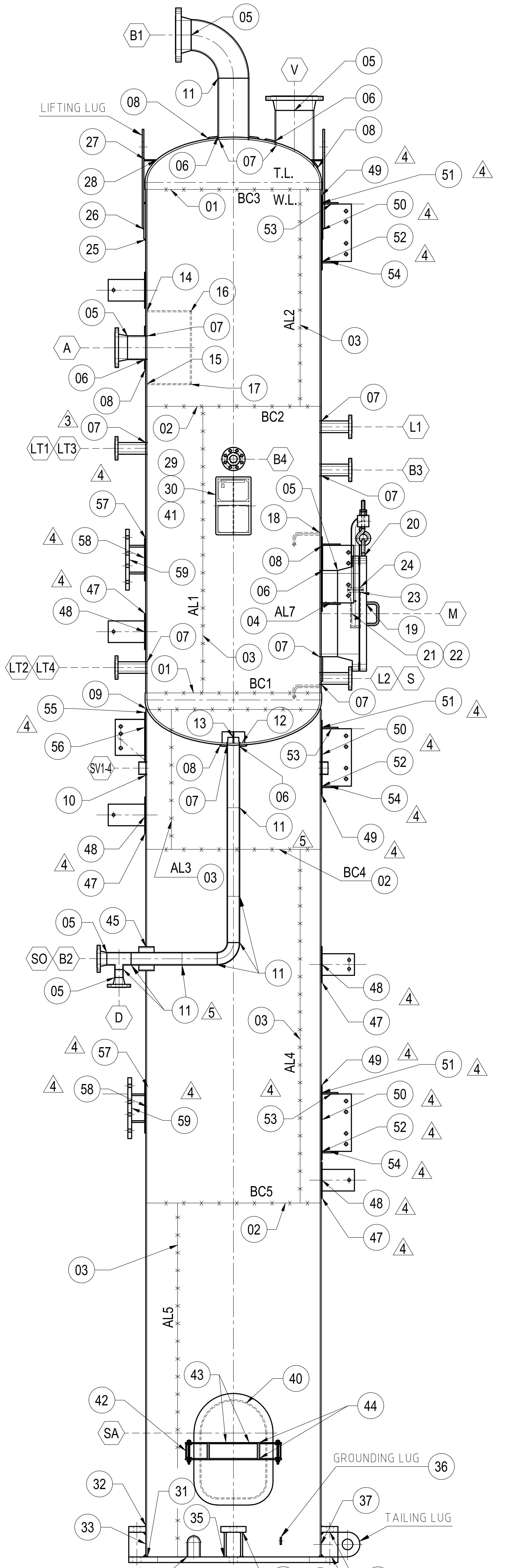

ELEVEATION

WELD JOINTS DETAIL

SR.NO.	DESCRIPTION	WELD JOINT NO.
01	DISHED END TO SHELL C-SEAM	BC1, BC3
02	MAIN SHELL & SKIRT SHELL C-SEAM	BC2, BC4 & BC5
03	MAIN SHELL L-SEAM	AL1, AL2, AL3, AL4, AL5 (3)
04	NOZZLE NECK L-SEAM (M)	AL7
05	NOZZLE NECK / ELBOW TO WNRF FLANGE (2)	CA, CB1, CB2, CV, CD, CM
06	NOZZLE NECK TO RF PAD	EA, EB1, EV, EM, EB2 (1)
07	NOZZLE NECK TO MAIN SHELL / DISH END	DA, DB1, DB2, DB3, DB4, DV, DD, DS, DM, DL1, DL2, DLT1, DLT2, DLT3, DLT4 (3)
08	RF PAD TO MAIN SHELL / DISH END	FA, FB1, FV, FM, FB2
09	SKIRT TOP SHELL TO DISHED END	FSTSDE-1
10	SKIRT VENT TO SKIRT SHELL	FSVSS-1 TO FSVSS-4
11	ELBOW TO PIPE, PIPE TO PIPE, PIPE TO TEE (FOR B1,D & B2)	BB2-1 TO BB2-6,BD-1, BB1-1 (6)
12	VORTEX BREAKER PLATE TO DISHED END	FVBPDE-1 TO FVBPDE-8
13	VORTEX BREAKER PLATE TO VORTEX BREAKER PLATE	FVBPVBP-1 TO FVBPVBP-4
14	INLET BOX TOP PLATE TO SHELL	FIBTPS-1
15	INLET BOX BOTTOM PLATE TO SHELL	FIBBPS-1
16	INLET BOX TOP PLATE TO END PLATE	FIBTPEP-1
17	INLET BOX BOTTOM PLATE TO END PLATE	FIBBPEP-1
18	HAND-GRIP TO SHELL	FHDE-1 TO FHDE-2
19	HANDLE TO MANHOLE BLIND FLANGE (FOR M)	FHMBF-1 TO FHMBF-4
20	DAVIT EYE BOLT SUPPORT TO FLANGE	FDEBSF-1 TO FDEBSF-4
21	DAVIT SUPPORT GUSSET TO MH FLANGE	FDSGMF-1 TO FDSGMF-2
22	DAVIT SUPPORT GUSSET TO SLEEVE	FDSGS-1 TO FDSGS-2
23	DAVIT COLLER PLATE TO DAVIT ARM	FDCPDA-1
24	SUPPORT PLATE TO SLEEVE	FSPS-1
25	LIFTING LUG PAD TO SHELL	FLLPS-1 TO FLLPS-2
26	LIFTING LUG TO PAD PLATE	FLLPP-1 TO FLLPP-2
27	LIFTING LUG SUPPORT PLATE TO LIFTING LUG	FLLSPLL-1 TO FLLSPLL-2
28	LIFTING LUG SUPPORT PLATE TO DISHED END	FLLSPDE-1 TO FLLSPDE-2
29	NAME PLATE BRACKET TO SHELL	FNPBS-1 TO FNPBS-2
30	NAME PLATE BRACKET TO BRACKET	FNPBB-1 TO FNPBB-2
31	SKIRT SHELL TO BASE PLATE	FSSBP-1 TO FSSBP-2
32	SKIRT TOP PLATE TO SKIRT SHELL	FSTPSS-1 TO FSTPSS-16
33	GUSSET PLATE TO SKIRT SHELL	FGPSS-1 TO FGPSS-32
34	GUSSET PLATE TO ANCHOR CHAIR TOP PLATE	FGPACTP-1 TO FGPACTP-32
35	GUSSET PLATE TO ANCHOR CHAIR BASE PLATE	FGPACBP-1 TO FGPACBP-32
36	GROUNDING LUG TO SKIRT SHELL	FGLSS-1 TO FGLSS-4
37	TAILING LUG TO SKIRT SHELL	FTLSS-1 TO FTLSS-2
38	TAILING LUG TO ANCHOR CHAIR TOP PLATE	FTLACTP-1 TO FTLACTP-2
39	TAILING LUG TO BASE PLATE	FTLBP-1 TO FTLBP-2
40	SKIRT ACCESS NECK TO SHELL(SA)	FSANS-1
41	NAME PLATE TO BRACKET	FNPB-1 TO FNPB-8
42	CHANNEL TO SKIRT SHELL (SA)	FCSS-1 TO FCSS-2
43	TOP & BOT. PLATE TO ACCESS COVER (SA)	FTBPAC-1 TO FTBPAC-4 (1)
44	SUPPORT ROD TO TOP & BOT. PLATE (SA)	FSRTBP-1 TO FSRTBP-4
45	SO1 NECK TO SKIRT SHELL	FSO1NSS-1 TO FSO1NSS-2 (2)
46	SKIRT DRAIN NECK TO SKIRT SHELL (SD1 7 SD2)	FSDNSS-1 TO FSDNSS-2
47	LADDER CLEAT PAD TO SHELL	FLCPS-1 TO FLCPS-10
48	LADDER CLEAT TO PAD	FLCP-1 TO FLCP-10
49	PLATFORM CLEAT PAD TO SHELL	FPCPS-1 TO FPCPS-15
50	PLATFORM CLEAT TO PAD	FPCP-1 TO FPCP-30
51	PLATFORM CLEAT TOP PLATE TO PAD	FPCTPP-1 TO FPCTPP-30
52	PLATFORM CLEAT BOTTOM PLATE TO PAD	FPCBPP-1 TO FPCBPP-30
53	PLATFORM CLEAT TO TOP PLATE	FPCTP-1 TO FPCTP-30
(4) 54	PLATFORM CLEAT TO BOTTOM PLATE	FPCBP-1 TO FPCBP-30
55	PLATFORM BRACING CLEAT PAD TO SHELL	FPBCPS-1 TO FPBCPS-2
56	PLATFORM BRACING CLEAT TO PAD	FPBCP-1 TO FPBCP-4
57	PLATFORM SUPPORT CLEAT PAD TO SHELL	FPSCPS-1 TO FPSCPS-5
58	PLATFORM SUPPORT BEAM TO PAD	FPSBP-1 TO FPSBP-5
59	PLATFORM SUPPORT BEAM TO BOLTING PLATE	FPSBBP-1 TO FPSBBP-5

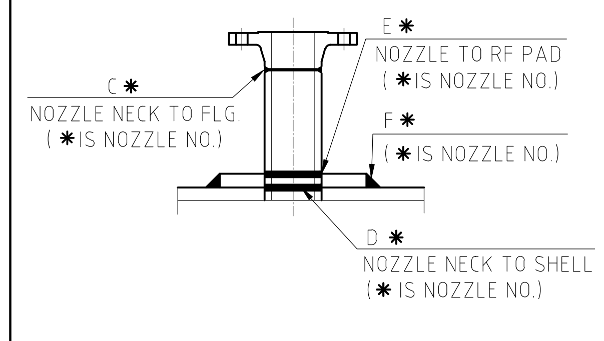

NOZZLE WITH RF PAD DETAILS

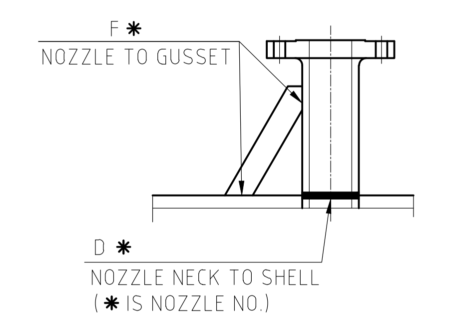

LONG WELD NECK NOZZLE DETAILS

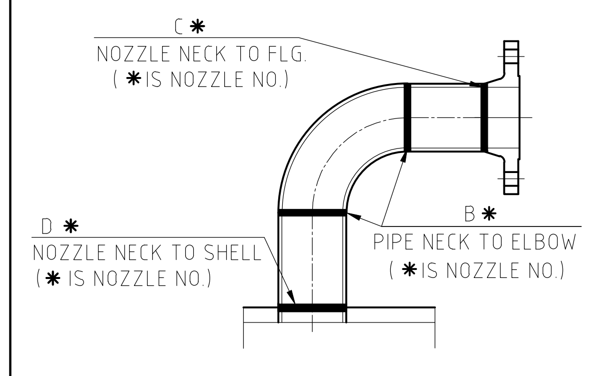

NOZZLE DETAILS

"AS BUILT"

ASME

LRQA Verification Limited
Name: Vikul Kumar Tyagi
Date: 10 June 2023
Ref No.: AHM2100247
Office: Vadodara
Signature:
A member of the LRQA Group Limited

MANUFACTURING SERIAL NUMBER :– E–22064–18–D–271

REV. NO.	DESCRIPTION	ZONE NO.	DRAWN	CHKD.	APPD.	DATE
7	AS BUILT	--	RKC	AVM/SRW	BK	07-06-2023
6	REVISED AS PER CLIENT COMMENTS	4,5,6,9 TO C,E & G	NSM	AVM/SAT	BK	05-12-2022
5	REVISED AS PER CLIENT COMMENTS	4,5,6,9 TO C,E & G	NSM	AVM/SAT	BK	05-12-2022
4	REVISED AS PER CLIENT COMMENTS	3-10 TO A-H	RKC	AVM/SAT	BK	01-08-2022
3	REVISED AS PER CLIENT COMMENTS	7-10 TO D-H	RKC	AVM/SAT	BK	28-06-2022
2	SR. NO 45 & 46 ADDED. SR. NO. 5 & 11 REVISED.	3-10 TO B-H	RKC	AVM/SAT	BK	05-04-2022
1	REVISED AS PER CLIENT COMMENTS	3-10 TO A-H	RKC	AVM/SAT	BK	14-12-2021
0	ISSUED FOR COMMENTS	--	SRG	AVM/SAT	BK	20-09-2021

REVISIONS

CLIENT : M/s. AIR PRODUCT, UK.
LOCATION : PARAMOUNT, CALIFORNIA, USA

THIS DWG. IS THE PROPERTY OF PRAJ INDUSTRIES LTD. AND SHOULD NOT BE REPRODUCED WITHOUT WRITTEN CONSENT FROM

PRAJ INDUSTRIES LTD.
``PRAJ TOWER", Bhumkar Chowk-Hinjewadi Road, Hinjewadi, Pune-411 057. (INDIA)

TITLE : WELDMAP DETAIL DRAWING FOR FOR H2S RECOVERY UNIT 18-D-271 ARG1 AMINE REGEN REFLUX DRUM

DRAWING SIZE : A2

SCALE NTS

PIL JOB CODE E-22064

DWG. NO. E-22064-ME-11-WEL-0001

SHEET 1 OF 1

REV. 6 7