ITEMS							SERVICE NOZZLES		STEAM HEATER NOZZLES		FAN				MOTOR			GEAR	
Item No	SERVICE	UNIT	UNIT TYPE	MODEL	BUNDLE SIZE	PASSES	INLET	OUTLET	INLET	OUTLET	DIA	TIP SPEED	NO. BLAD	PITCH DEG	HP	RPM	VFD	SIZE	RATIO
012-E-030	WATER COOLER	1	2FPVA	13.00/12-406	13.0-406	3	(2) 8"-150# WNRF	(2) 8"-150# WNRF	~	~	12'	9,900 fpm	4	7.4	25	1750	NO	~	~

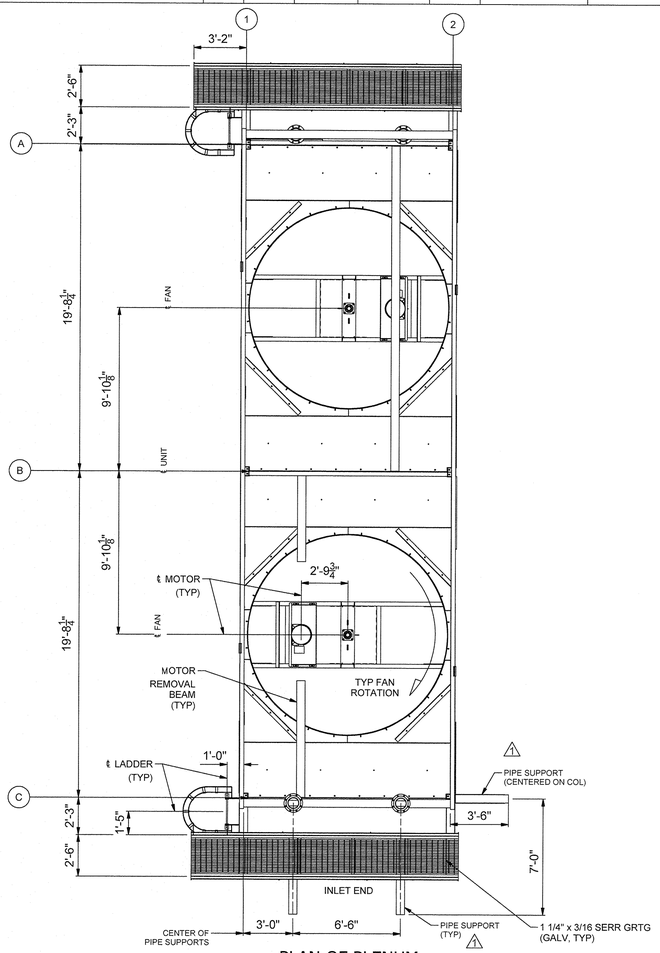

PLAN OF PLENUM

NORTH

NOTES:

1. VENT & DRAIN:
   a. VENTS: 1"-6000# THREDOLET w/ PIPE PLUG LOCATED ON ℄ OF HEADER AT TOP OF OUTLET HEADER.
   b. DRAINS: 1"-6000# THREDOLET w/ PIPE PLUG LOCATED ON ℄ OF HEADER AT BOTTOM INLET HEADER.
2. INSTRUMENT CONNECTIONS: NOT APPLICABLE
3. NITROGEN PURGE REQUIREMENTS: YES.
4. PIPING NOTE: ALL TUBE BUNDLE FRAMES ARE DESIGNED FOR 5/16" HEADER MOVEMENT IN EITHER HORIZONTAL DIRECTION PERPENDICULAR TO TUBES.
5. BEARING: DODGE SCM4 (UPPER)
   DODGE SCM4 (LOWER)
6. DRIVE: GATES POLY CHAIN.
7. VIBRATION SWITCH: MURPHY, VS-2-EX.
8. VALVE POSITIONER FOR AV FAN: NOT APPLICABLE.
9. LOUVER MATERIAL: NOT APPLICABLE.
10. LOUVER OPERATION: NOT APPLICABLE.
11. FOUNDATION AND ANCHOR BOLTS: TO BE FURNISHED BY OTHERS.
12. HPC FIELD ERECTION COLOR CODE: BLUE.
13. COATING: SEE C1 DRAWING.
14. WALKWAY & LADDERS: PER HPC STANDARDS .
15. HPC SHOP ASSEMBLY & BAY TESTING REQUIREMENTS:
    a. PREASSEMBLE: BASE UNIT. TRIAL FIT-UP BAY WITH SUBSTRUCTURE AND WALKWAYS.
    b. DISASSEMBLY: DOWN TO BASE UNIT.
    c. MECHANICAL RUN-IN: YES, PER HPC STANDARD.
    d. NOISE TEST: 2-POINT NOISE TEST.
    e. FAN PERFORMANCE: NOT APPLICABLE.
    f. VIBRATION TEST: YES, PER APPI-661.
16. SHIP UNIT: BASE UNITS w/ WINDSKIRT.
17. COLUMN LOADS: SEE REACTION CHART DWG. RC1.
18. BUNDLE COVER REQUIREMENTS: YES, PLYWOOD.
19. FIREPROOFING REQUIREMENTS: NOT APPLICABLE.
20. BUG SCREEN REQUIREMENTS: NOT APPLICABLE.
21. WIND SKIRT REQUIREMENTS: YES.
22. REMOVABLE FAN ASSEMBLY REQUIREMENTS: NOT APPLICABLE.
23. RTD REQUIREMENT: NOT APPLICABLE.
24. METRIC REQUIREMENTS: NOT APPLICABLE.
25. INLET BELLS REQUIREMENT: YES.
26. WORK THIS DRAWING WITH: NOT APPLICABLE.
27. FOR SHIPPING SIZE AND WEIGHT INFORMATION, SEE DWG SWLA1.
28. GREASE LINES (316 SS) SHALL EXTEND TO THE COLUMNS.

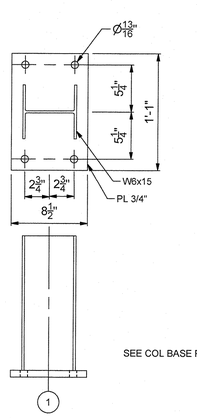

COL BASE PLATE DETAILS

SCALE 1 / 8

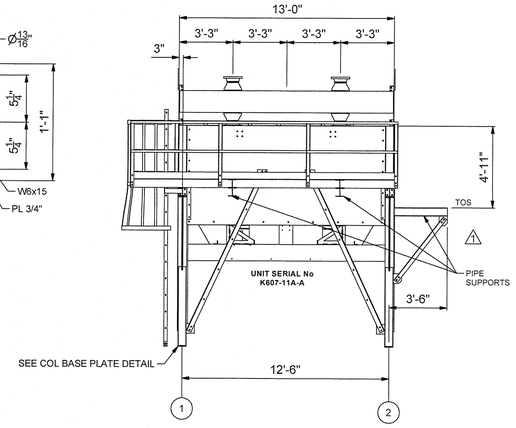

FRONT ELEVATION

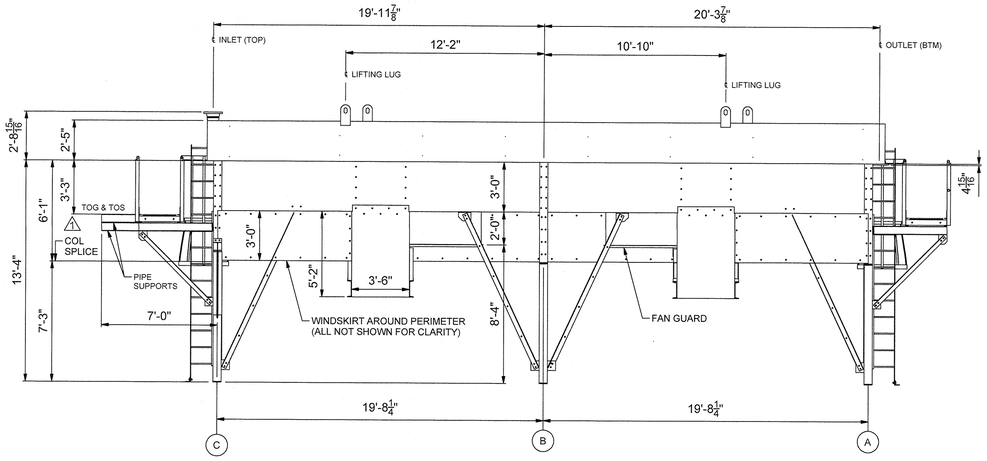

SIDE ELEVATION

REV	BY	DESCRIPTION	CHK/APVD	DATE
2	BH	REV'D NORTH ARROW	SJH/DL	08/17/15
1	RM	ADDED PIPE SUPPORTS	HD/DL	3-2-15

THIS IS A CAD DRAWING, DO NOT REVISE MANUALLY

COPYRIGHT © HUDSON PRODUCTS CORPORATION
ALL RIGHTS RESERVED

HUDSON PRODUCTS CORPORATION
Registration No. F-11837 **Beasley, Texas**

TITLE: GENERAL ARRANGEMENT

ITEM No: 012-E-030 BANK: A

FOR: AIR LIQUIDE: AIR LIQUIDE GLOBAL E&C SOLUTIONS US INC

NATCHEZ, MISSISSIPPI

THIS PRINT IS THE PROPERTY OF HUDSON PRODUCTS CORPORATION AND SHALL BE RETURNED ON DEMAND. IT SHALL NOT BE TRACED OR REPRODUCED, OR USED DIRECTLY OR INDIRECTLY IN ANY WAY DETRIMENTAL TO THE INTERESTS OF HUDSON PRODUCTS CORPORATION.

SCALE		DATE
DRAWN	RM	10-25-14
CHECKED	HD	10-29-14
APPROVED	SJH	10-31-14
ENGINEER	DL	10-31-14

CUSTOMER'S P.O. No.	JOB No.	DRAWING No.
4607300-000 / 1.27013	K607	11A