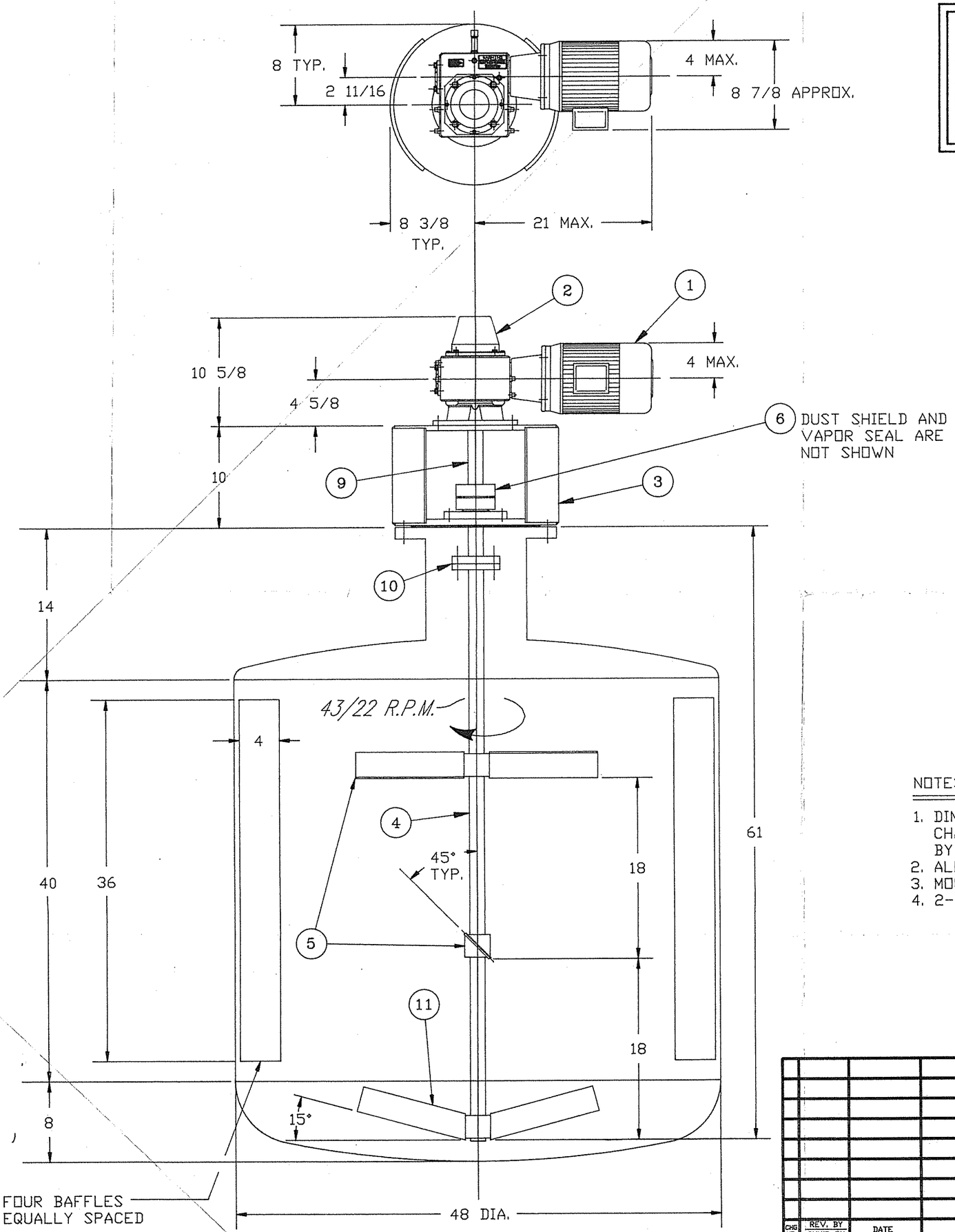

CERTIFIED
FOR CONSTRUCTION
FOR: SOFIX CORPORATION
CHATTANOOGA, TN
REF.: PURCHASE ORDER# 91-00008
ProQuip Inc. W.O.#: 9059
BY: K. Bolcher DATE: 8/12/91

CERTIFIED OUTLINE & DIMENSION DRAWING

CUSTOMER: SOFIX CORPORATION
LOCATION: CHATTANOOGA, TN 37415
PURCHASE ORDER: 91-00008

ProQuip WORK ORDER: 9065 SERIAL: 9065
QUANTITY: 1 WETTED PARTS MAT'L.: 304 S.S. WEIGHT: 250 lbs.

LOAD DATA FOR MIXER SUPPORT DESIGN

VERTICAL DOWNWARD FORCE (upward force from tank pressure not included) 250 lbs.
DYNAMIC TORQUE: 2149 lbs-in. VARYING DYNAMIC OVERTURNING MOMENT 1670 lbs-in
Mixer support design must consider both mechanical strength and rigidity. Support must be stiff enough to avoid perceptable drive movement while mixer is operating.
TANK, BAFFLES, AND SUPPORTS ARE NOT FURNISHED BY ProQuip.

MINIMUM TANK OPENING: 5" DIA. | TAG NUMBER: NONE

ITEM	PART No.	ITEM DESCRIPTION
1	–	MOTOR-1/.5HP;1800/900RPM; 230/460V; 3 Ph; 60 Hz FRAME: 145TC TYPE: TEFC (NOTE – 4)
2	--	REDUCER: JL-40
3	–	BASE: 10"-150# (ANSI) FLANGE (NOTE – 3)
4	--	SHAFT: 1 1/2" DIA.
5	–	IMPELLER: 24" DIA., AXIAL FLOW, 2 BLADE LH
6	–	MECHANICAL SEAL: DURA, SINGLE, MSS
7	–	DUST SHIELD: SEE REF DWG #2A614501
8	–	VAPOR SEAL: SEE REF DWG #2A614501
9	–	SEAL SHAFT: 1 1/2" DIA.
10	–	IN-TANK COUPLING – 4 3/4" DIA.
11		IMPELLER: 24" DIA., AXIAL FLOW, 2 BLADES RH

NOTES:

1. DIMENSIONS ARE FOR REFERENCES ONLY AND ARE SUBJECT TO CHANGE WITHOUT NOTICE UNLESS CERTIFIED FOR CONSTRUCTION BY THAT OF ProQuip, Inc.
2. ALL DIMENSIONS SHOWN ARE IN INCHES.
3. MOUNTING FLANGE HOLES STRADDLE CENTER LINES.
4. 2-SPEED, CONSTANT TORQUE, SINGLE WINDING (U.S. MOTOR)

CHG NO.	REV. BY / CHK'D BY	DATE	DESCRIPTION OF CHANGE

ProQuip, Inc.
850 E. Highland Rd.
Macedonia, Ohio 44056
216/468-1850

TOLERANCES UNLESS OTHERWISE SPECIFIED:
FRACTIONS ± 1/32" 2 PLACE DECIMAL ± .01"
3 PLACE DECIMAL ± .005" ANGLES ± 30' (1/2°)

SCALE NTS | BY D.P.SCHAAR
DATE 13 MAY 91 | CK'D.
APP'D.

100JLU40 AGITATOR AND GENERAL TANK ARRANGEMENT

THIS DRAWING AND THE INFORMATION IT CONTAINS IS THE PROPERTY OF ProQuip, Inc. AND MAY NOT BE COPIED OR USED DIRECTLY OR INDIRECTLY FOR ANY PURPOSE OTHER THAN THAT AUTHORIZED IN WRITING BY ProQuip, Inc.

DRAWING NUMBER 2C614500

114398 AGITATOR