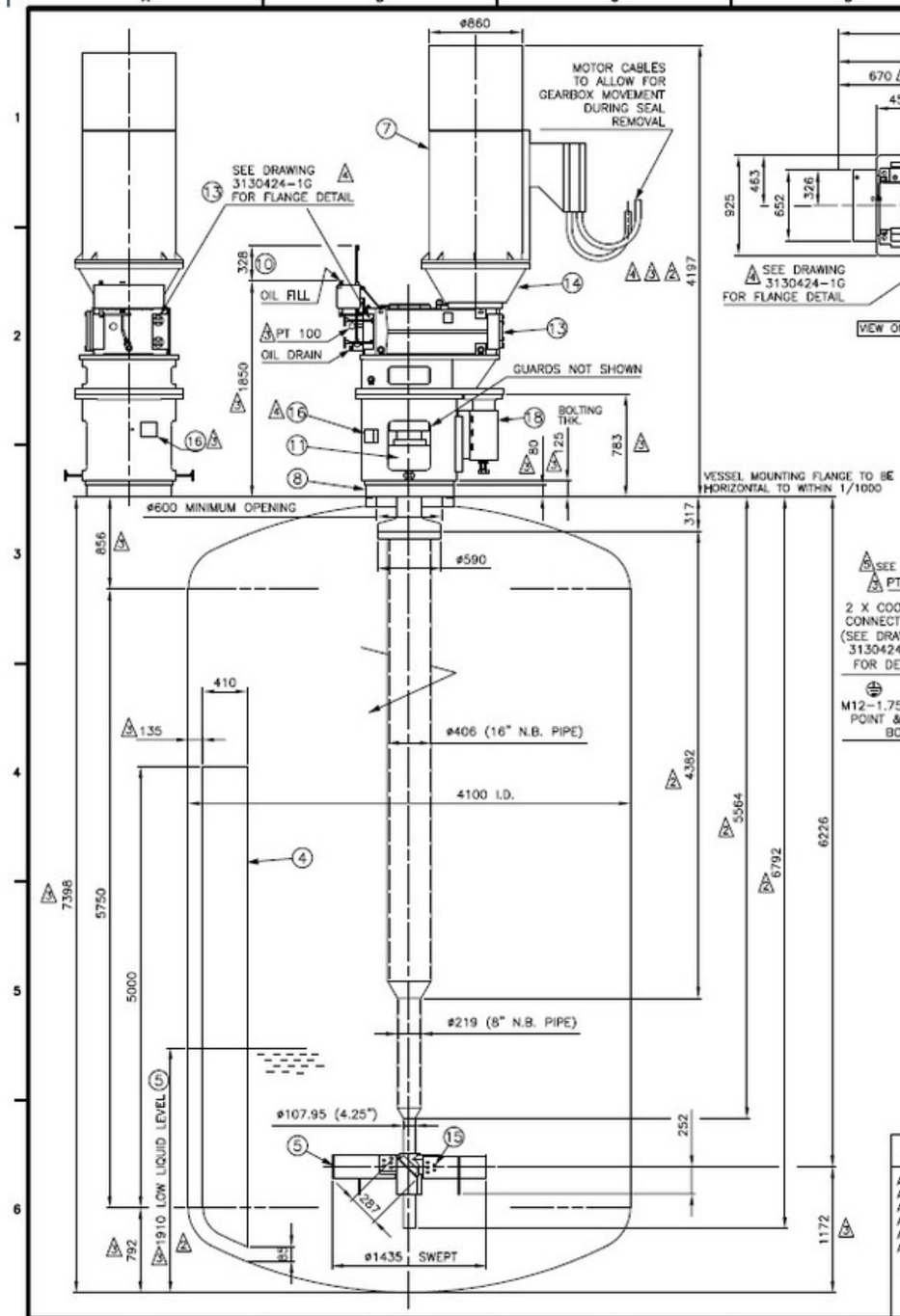

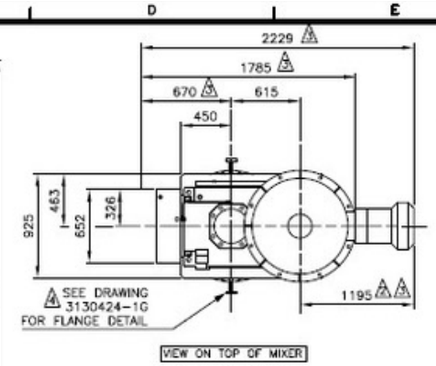

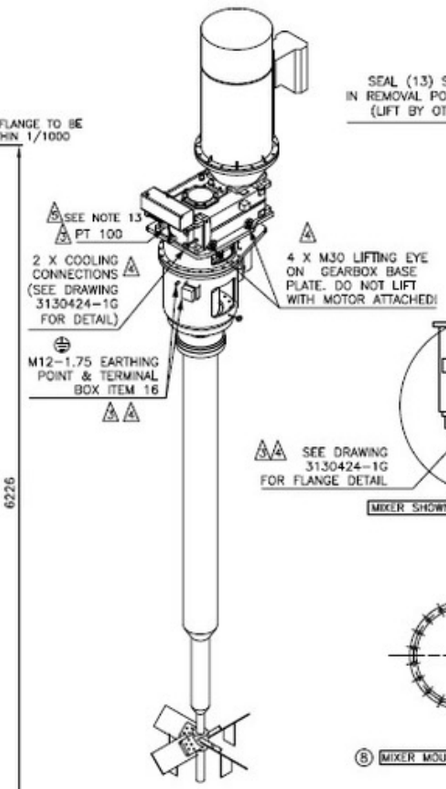

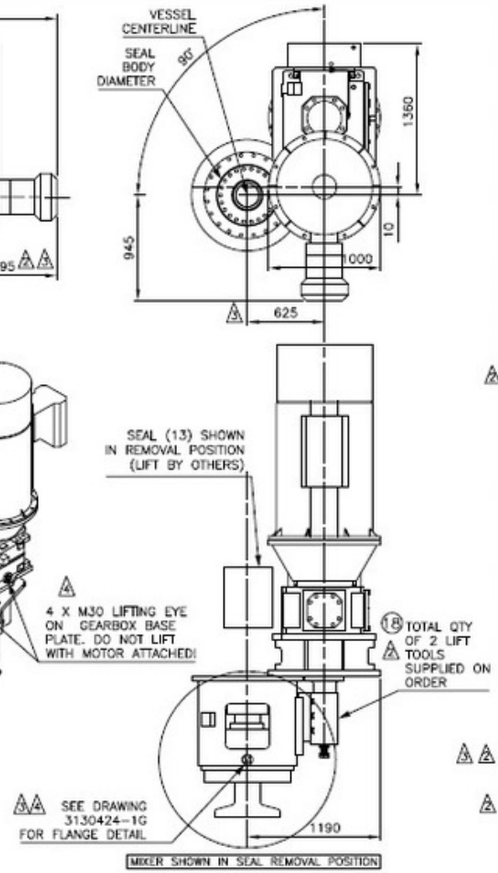

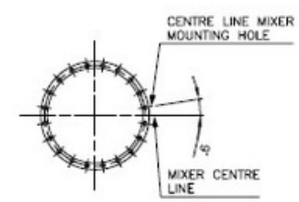

(8) MIXER MOUNTING PLATE DETAIL

1:30 @ A2	(1) THIS DRAWING IS TO SCALE
MILLIMETRES	(2) DIMENSIONS ARE IN
316L SS SAF2205	(3) MATERIAL OF IN -TANK MIXER PARTS MIXER MOUNTING FLANGE SHAFT & IMPELLER SURFACE FINISH TUBE SHAFT 2B MILL FINISH FLANGE FACE AND ALL OTHER PARTS 3.2um Ra ALL WELDS GROUND SMOOTH
4 @ 90°	(4) TANK BAFFLES (BY CLIENT) – QUANTITY
189 RPM 50 – 189 RPM 50 RPM (13 Hz) 1X 4(A201)	(5) NOMINAL IMPELLER SPEED (REV/MIN) SPEED RANGE (VSD RANGE 13 – 50 Hz) MAX. SPEED WITH LOW FLUID COVER OVER IMPELLER. NUMBER OF BLADES (TYPE) IMPELLER ADJUSTMENT ON SHAFT (+ = UP) +266 MM / – 450 MM. IN INCREMENTS OF 90 mm
ø600 / ø720 mm	(6) MINIMUM TANK OPENING REQUIRED (SHAFT / HUB)
350 kW ABB 1500 AXR355MD4 4 6000/3/50 ACS2000DTD	(7) MOTOR Ex ec IIC T3 – IM 4001 / IPSS / IC411 SUITABLE FOR VARIABLE SPEED CONTROL VIA ACS 2000 VFD MOTOR SUPPLIER SPEED(REV/MIN) FRAME POLES SUPPLY (VOLTS/PHASE/HZ) VARIABLE FREQUENCY DRIVE – MAX. CABLE RUN IS 300M VFD TO BE INSTALLED IN NON-HAZARDOUS INDOOR AREA.
150.4 kN 26.85 kNm 174.2 kNm 20.3 kNm 3.9 kN 6.0 – 25 Hz 0.8 – 3.2 Hz 3.3 – 12.6 Hz	(8) DESIGN DATA FOR MOUNTING DOWNWARD LOAD TORQUE BENDING MOMENT STATIC BENDING MOMENT FROM MOTOR OVERHANG TO LIMIT VIBRATION OF THE MIXER HEAD, DEFLECTION AND ROTATION OF THE MOUNTING SURFACE DUE TO LOADS SHOWN ABOVE SHALL BE LESS THAN 1/8 DEGREE. LOAD ACTING ON EACH BAFFLE AT LEVEL OF IMPELLER. BAFFLE LOAD IS FATIGUE INDUCING AT FREQUENCY OF 4 X SHAFT ROTATION (3.3 – 12.6 HZ) FORCING FREQUENCIES APPLIED TO VESSEL ARE: MOTOR FREQUENCY SHAFT SPEED IMPELLER DESIGN LOADS ARE GREATER THAN ACTUAL LOADS BY A SUITABLE FACTOR CONSISTENT WITH CONSTRUCTION CODES AND LIGHTNIN EXPERIENCE. LIGHTNIN DOES NOT WARRANT, GUARANTEE OR ASSUME RESPONSIBILITY FOR THE DESIGN OR CONSTRUCTION OF THE MOUNTING STRUCTURE.
24"ANSI 150#[24NPS] 813 mm 749.3 mm 20 1-1/4"-8UN	MIXER MOUNTING PLATE TYPE (RF) OUTSIDE DIAMETER BOLT CIRCLE DIAMETER NUMBER OF HOLES BOLT DIAMETER BOLT HOLE STRADDLE MIXER CENTRE LINE
2850 kg 2794 kg 228 kg 492 kg 155 kg 1540 kg 267 kg 1182 kg 208 kg 9716 kg	(9) MIXER WEIGHT MOTOR GEARBOX (INCLUDING OIL) SEAL CARTRIDGE SEAL SHAFT SEAL SHAFT REMOVABLE COUPLING PEDESTAL (UPPER 810 / LOWER 730) FLANGE LOWER SHAFT IMPELLER (INCLUDES HUB 90) TOTAL
	(10) CLEARANCE REQUIRED FOR REMOVAL OF OIL LEVEL GAUGE
53925-90-01 74 IN / 111 OUT	(11) MECHANICAL SEAL FLOWSERVE MD-200 DOUBLE GAS SEAL SEAL FACE MATERIALS INBOARD/OUTBOARD SiC V CARBON ELASTOMERS – INBOARD FFKM/ OUTBOARD FKM INCLUDING DEBRIS WELL AND SPHERICAL ROLLER BEARING VESSEL DESIGN PRESSURE/TEMP – 6 BAR G/ 150 DEG C VESSEL OP. PRESSURE/TEMP – <0.5-2 BAR G/ 90 DEG C SET NITROGEN 2 BAR ABOVE MAX. OPERATING PRESSURE MAXIMUM NITROGEN CONSUMPTION – 185 STD LITRE/HOUR
PLAN 74 DWG. 00509094	(12) GAS PANEL FOR SEAL GAS (N2), SUPPLIED LOOSE.
FLENDER 2 X PN40 DIN15 12 L/MIN	(13) GEAR DRIVE (PT-100, 85 C = WARNING & 90 C STOP) SUPPLIER, RATIO 7.94:1, INCLUDING PT100 FOR OIL TEMP. COOLING COIL CONNECTIONS – DIN FLANGE COOLING WATER FLOW RATE AT 20°C INLET, MAX 7 BARG.
	(14) HIGH SPEED COUPLING TYPE – NEUPEX
	(15) IMPELLER HARDWARE IS LOCKED WITH DOUBLE NUTS
NON4-120M35-N0	(16) PEPPERL & FUCHS SPEED SENSOR AND TERMINAL BOX
	(17) ATEX CLASSIFICATION:– CE Ⅱ 2G Ex h IIC T3 Gb – IN TANK Ⅱ 3G Ex h IIC T3 Gc – OUT OF TANK
	(18) SWIVEL LIFT TOOL. TOTAL 2 PISTON ASSEMBLIES PER ORDER

MIXER TAG NUMBERS

A01AGT12001
A01AGT12501
A01AGT13001
A01AGT13501
A01AGT14001
A01AGT14501

REV	DATE	BY	REVISION DESCRIPTION
04	12/04/21	IR	[illegible]
03	04/01/21	SJH	[illegible]
02	14/12/2020	SJH	[illegible]
01	10/7/2020	IJ	FIRST ISSUE

MIXER MODEL: 7000-N-350-V
CUSTOMER: CONFIDENTIAL CLIENT
TAG NO.: SEE TABLE
P.O. NO.: 4600000317
DRAWN BY: IJ
DATE: 9/7/2020
CERTIFIED: SJH
DATE: 9/7/2020

TEL: +44 (0)161 249 1170 E Mail: fl.apexinsure@spxflow.com
FAX: +44 (0)161 249 1156 Web: http://www.spxflow.com

SPXFLOW
Lightnin Plenty

ALL EQUIPMENT DESIGN AND APPLICATION DATA SHOWN HEREIN AND RELATED KNOW-HOW ARE CONFIDENTIAL AND PROPRIETARY AND REMAIN THE PROPERTY OF SPX FLOW, INC. NO USE OR DISCLOSURE THEREOF MAY BE MADE WITHOUT THE WRITTEN PERMISSION OF SPX FLOW, INC.

DRAWING TITLE
GENERAL ARRANGEMENT DRAWING

DRAWING NUMBER
3130424-1A

REV
04