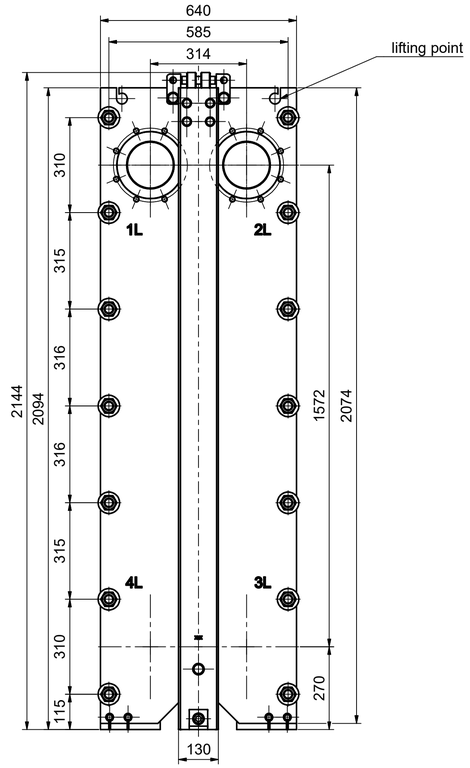

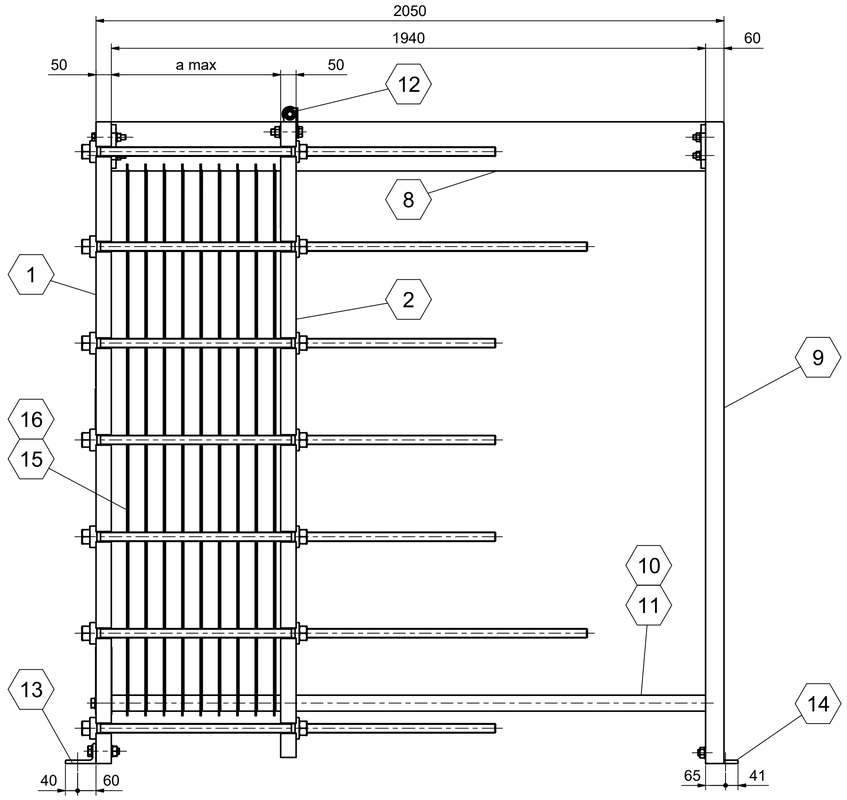

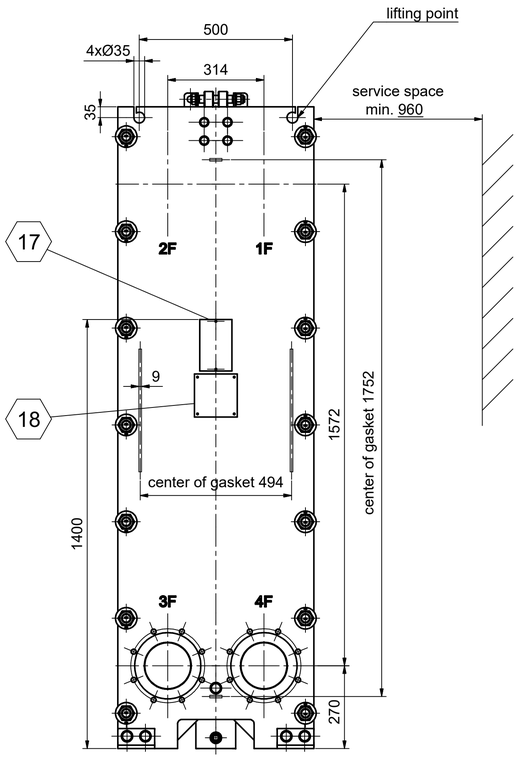

operating data		room 1-4	room 2-3
product		ASB EFFLUENT	RAW MANURE
max. allowable working pressure / MAWP	psi g kPa g	145.0 1000.0	145.0 1000.0
hydrostatic test pressure	psi g kPa g	188.5 1300.0	188.5 1300.0
max. design temperature	°F	230.0	230.0
min. design metal temperature / MDMT	°F	32.0	32.0
volume (V)	gal	48.58	48.58
HE-surface	ft²	411.40	
weight gross/net	lb	4420.12 / 3602.37	
inlet temperature	°F	170.0	83.4
outlet temperature	°F	148.0	105.0

tests	drawing approved by	Kelvion PHE GmbH	
	approval of outward dimensions	LRQA Verification Limited	
	hydrostatic test	LRQA Verification Limited	
	design acc. to	ASME Section VIII Div. 1 Edition 2021 U-STAMP, National Board	
surface	sandblasting	7.096-230 4.1.A	length of pack: $a_{max.}$ = 21.785 inch 553 mm
	primer	7.096-230 4.1.A	
	top coat	7.096-230 4.1.A	$a_{min.}$ = 21.384 inch 543 mm
	colour	RAL 5002	

connections	1F	2F	3F	4F	1L	2L	3L	4L
6" ANSI B16.5 150 lb/sq. in			RAW MANURE -out-	ASB EFFLUENT -in-	ASB EFFLUENT -out-	RAW MANURE -in-		

connection 3F + 4F
metal insert
6" ASME B16.5 150lb/sq. in
scale: 1 : 4

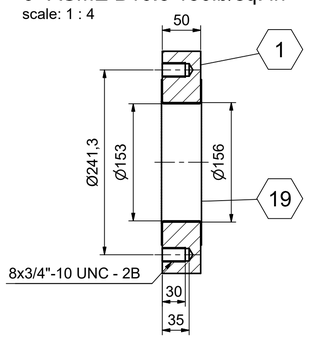

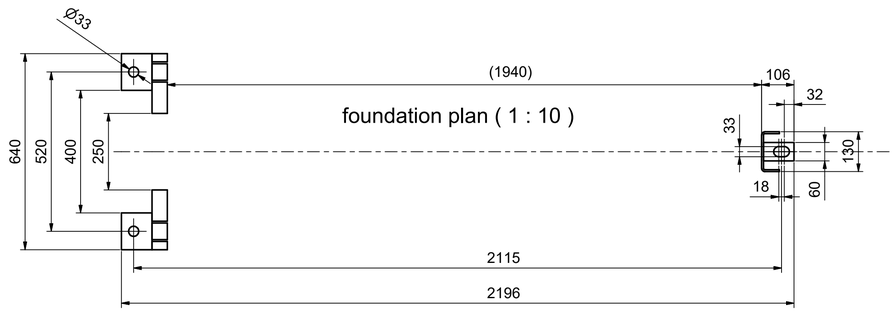

connection 1L + 2L
metal insert w. flange ring
6" ASME B16.5 150lb/sq. in
scale: 1 : 4

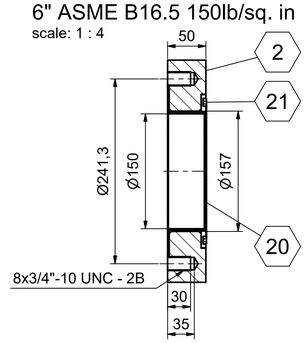

A-A (1 : 5)

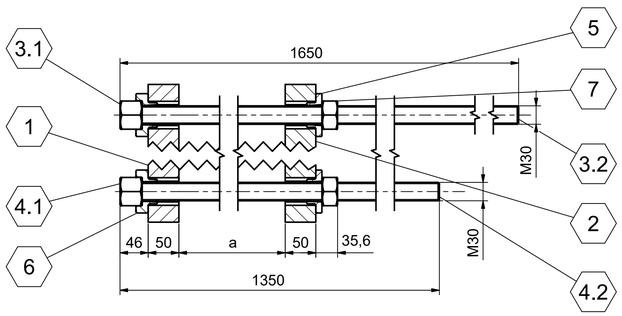

N.B.: XXX

CERTIFIED BY

Kelvion PHE GmbH

145.0 PSI AT 230.0 °F
145.0 PSI AT 230.0 °F
MAWP

32.0 °F AT 145.0 PSI
32.0 °F AT 145.0 PSI
MDMT

U

152/1011*
S/N

2022
YEAR BUILT

Kelvion

Kelvion PHE GmbH
Karl-Schiller-Str. 1-3
31157 Sarstedt, Germany
Phone +49 5066 601 0
Fax +49 5066 601 105
www.kelvion.com

Name Plate
Leistungsschild für Wärmetauscher
Plaque d'identification de l'échangeur de chaleur

Plate Heat Exchanger Type Wärmetauscher Echangeur de chaleur	NF150L BA-150		
Serial no. Fabrik-Nr. No de fabr.	152/1011*		
min./max. allowable pressure min./max. zul. Druck (PS) P min/max de service psig	0.0 / 145.0 (1)	0.0 / 145.0 (2)	
min./max. allowable temp. min./max. zul. Temp. (TS) T min/max de service °F	32.0 / 230.0	32.0 / 230.0	
Test pressure Prüfdruck (PT) Pression d'épreuve psig	188.5	188.5	
Volume Volumen (V) Contenu US gal	48.58	48.58	
Net weight Leergewicht Poids à vide	3602.37 lb		
Year of constr. Herstellungsjahr Année de fabr.	2022		
"a" max	21.785 inch		
"a" min	21.384 inch		

a

no.	quant	denomination	material ASME	pr-product	material DIN	cert	remark
21	2	seal ring	-	-	NBR	-	
20	2	metal insert w. flange ring	-	Bl. 2/6 DIN EN 10131	1.4404/1.4571	3.1	
19	2	metal insert	-	Bl. 1 DIN EN 10131	1.4404	3.1	
18	1	U-STAMP plate	-	Bl. 2 DIN EN 10131	1.4571	-	
17	1	name plate	-	Bl. 0,8 DIN EN 10131	1.4301	-	
16	51	gasket	-	-	NBR	-	
15	51	HE-plate	SA-240Gr316L	Bl. 1 austenitic steel	1.4404	3.1	
14	1	foot support	-	L 100x65x11 DIN 1029	S235JR	-	
13	2	foot fixed plate	-	L 100x65x11 DIN 1029	S235JR	-	
12	1	suspension	-	Bl. 5 DIN EN 10029 / Rd.50	1.4301/ Delrin	-	
11	1	cladding pipe	-	Rohr DIN EN 10220	1.4301	-	
10	1	connection rod	-	Rd. 48 h11 DIN EN 10278	S235JRG2C+C	-	
9	1	support	-	-	S235JR	-	
8	1	beam cpl.	-	INP 160 - DIN 1025-1 / Bl. 15 DIN EN 10029	S235JR	-	
7	14	hexagon nut	SA-194Gr7	M30 DIN EN ISO 4032	-	3.1	*
6	14	disc	-	round steel DIN EN 10060	C45 DIN EN 10083-2	2.2	
5	14	disc	-	round steel DIN EN 10060	C45 DIN EN 10083-2	2.2	
4.2	1	threaded bolt	SA-193GrB7	M30x1350	-	3.1	*
4.1	1	hexagon nut	SA-194Gr7	M30 DIN EN ISO 4032 m=1,2d	-	3.1	*
4	10	tightening bolt	SA-193GrB7	-	-	-	
3.2	1	threaded bolt	SA-193GrB7	M30x1650	-	3.1	*
3.1	1	hexagon nut	SA-194Gr7	M30 DIN EN ISO 4032 m=1,2d	-	3.1	*
3	4	tightening bolt	SA-193GrB7	-	-	-	
2	1	flame cut loose plate	SA-516Gr60	Bl.50 carbon steel, normalized	-	3.1	*,**
1	1	fixed plate	SA-516Gr60	Bl.50 carbon steel, normalized	-	3.1	*,**

* ASME section II part A valid edition, ** SA-20

152/10112+10113	S152/10112	Lost Creek Dairy, LLC, Roggen, CO 80652 / 0200505343	
serial-no.	flow diagram-no.	customer / order-no.	project

no.	changes	drawn	date	checked	date
01					
02					
03					
04					
05					

dimensions without tolerances DIN ISO 2768 - m
welded structures DIN EN ISO 13920 - CF

size	scale	sheet
A1	1 : 10	1 / 1

	name	date
drawn	O.Kulchenko	03.03.2022
checked	S.Pech	03.03.2022

ASME U-STAMP

Kelvion
Kelvion PHE GmbH
Karl-Schiller-Str. 1-3
31157 Sarstedt

description
plate heat exchanger NF150L BA-150

drawing-no. Z152/10112 rev. 00
item-no. -

The reproduction, distribution and utilization of this document as well as the communication of contents to others without express authorization is prohibited. Offenders will be held liable for the payment of damages. All rights reserved in the event of the grant of a patent, utility model or design.

1150913_S50_40
106-131G-07