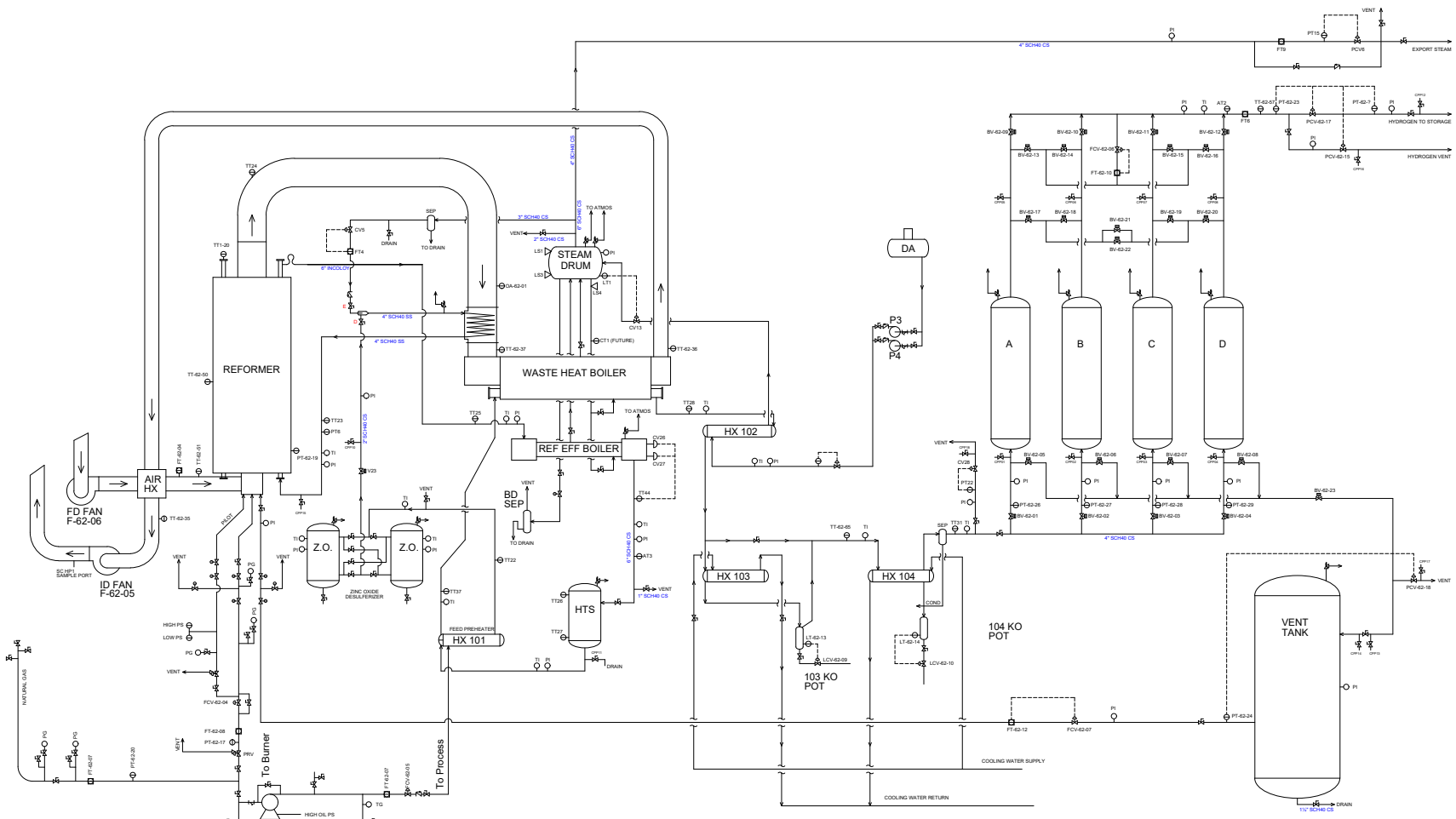

ADM VALDOSTA REFINERY
1841 CLAY ROAD, VALDOSTA, GA 31601

HYDROGEN PLANT
P&ID

REV: JAN 6, 2006