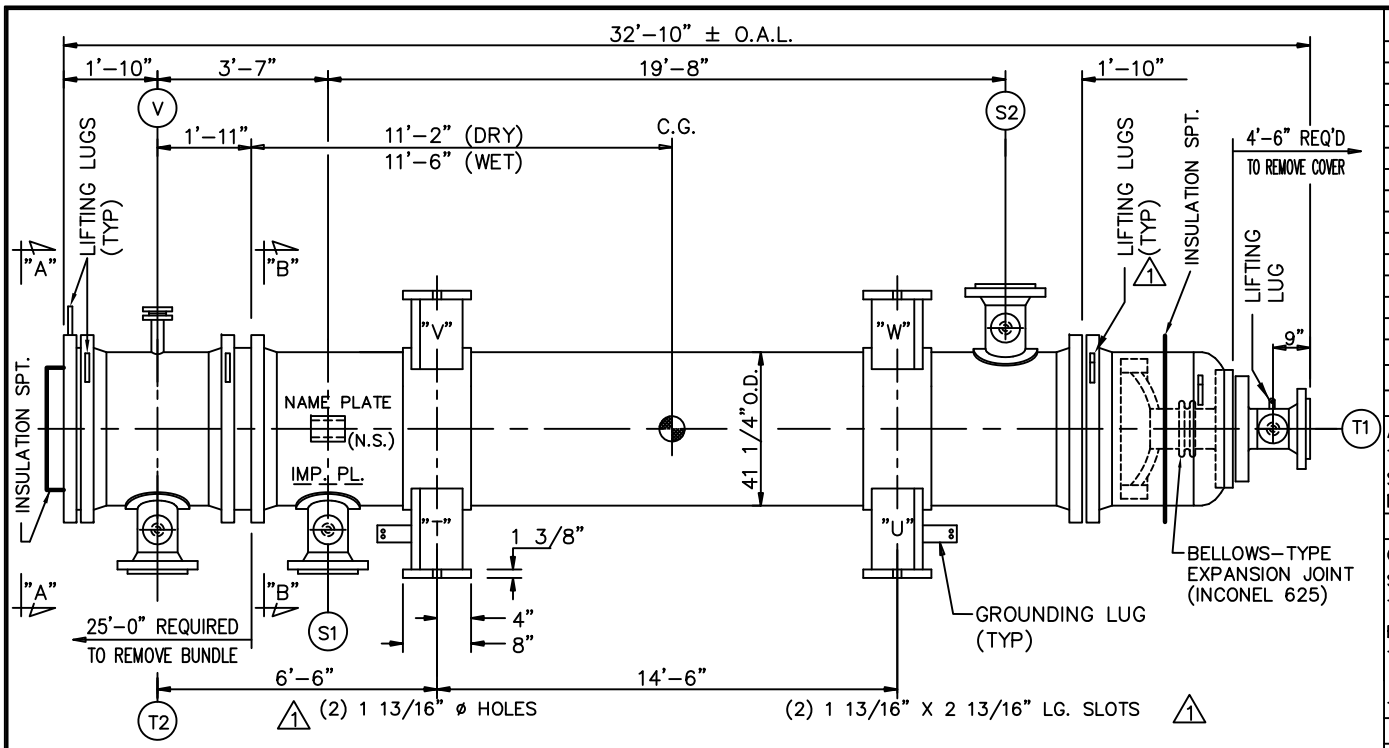

DESIGN DATA	SHELL	TUBE
DESIGN PRESSURE PSIG	440	335
VACUUM PRESSURE PSIG	FV AT 350°F 1	FV AT 350°F 1
SHOP TEST PRESSURE PSIG	610	470
FIELD TEST PRESSURE PSIG	600	460
M.A.W.P. (H & C) PSIG	460	352
LIMITED BY	FLOATING HEAD	CHANNEL COVER
M.A.W.P. (N & C) PSIG	466	360
LIMITED BY	BODY FLANGE	CHANNEL COVER
DESIGN TEMP. Deg.F.	480	660
MDMT Deg. F.	-20	-20
CORROSION ALLOWANCE	1/8"	1/8"
NUMBER OF PASSES	1	1
RADIOGRAPHY	FULL RT-1	FULL RT-1
HEAT TREAT REQUIRED	YES	YES

ESTIMATED WEIGHTS, LBS.

DRY: 40000 BUNDLE: 22500 WET: 54600

SPECIFICATIONS

ASME CODE SECTION VIII, DIVISION 1, 2007 ED., 2008 ADD. (STAMP: YES).
TEMA CLASS R, API-660, FRONTIER FEP AND BURNS & McDONNELL SPECIFICATIONS APPLY 2 1
NATIONAL BOARD REGISTRATION REQUIRED.

MATERIAL

CHANNEL:	SA-516-70N (HIC) 1	FLTG HD CVR:	SA-516-70N (HIC)
SHELL:	SA-516-70N (HIC) 1	SHELL CVR:	SA-516-70N (HIC)
TUBESHEETS:	SA-350-LF2 CL1	CHAN. CVR:	SA-350-LF2 CL1
BAFFLES:	SA-516-70 1	1 EXP. JT.:	INCONEL 625 LCF GR 1
TUBES:	SA-179		

(915) 3/4" O.D. X 0.109" (MIN) X 24'-0" LG.
TUBE PITCH: 1" ◇SURFACE: 4142 SQ. FT.

1 NOTE: ALL CARBON STEEL MATERIAL IN CONTACT WITH PROCESS FLUIDS SHALL BE HIC RESISTANT AND FULLY KILLED

GENERAL NOTES

ALL BOLT HOLES TO STRADDLE NATURAL CENTER LINES.
INSULATION: 4" BOTH SIDES (BY OTHERS) 1
GASKETS: GIRTH FLANGES 1/8" CS CMGC
INTERNAL GASKETS: 1/8" CS GMGC
(2) SPARE SETS OF GASKETS REQUIRED & 10% SPARE BOLTING
TUBE-TUBESHEET JOINT: STRENGTH WELDED & ROLLED
PAINT: SEE PAINT MAP DWG X-7705-A2
THIS ITEM X-7705 (20-E-0825 B) IS THE MIDDLE SHELL OF A STACK OF 3 EXCHANGERS. SEE DRAWING X-7706-A2 FOR STACKING ARRANGEMENT.
SHELLSIDE AND TUBESIDE OF EXCHANGER IS IN AES SERVICE (FEP 10-2-1 AND FEP 10-2-3) 1

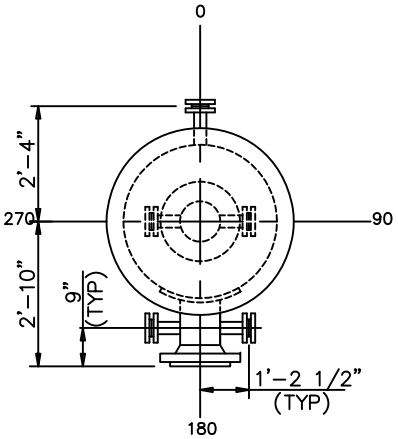

VIEW A-A

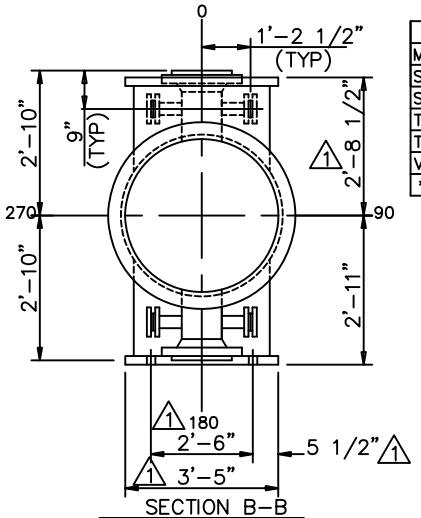

SECTION B-B

NOZZLE SCHEDULE

MK	QT	DESCRIPTION	PROCESS	AUXILIARIES
S1	1	14" 300# RF WN	INLET	*
S2	1	14" 300# RF WN	OUTLET	*
T1	1	14" 300# RF WN	INLET	*
T2	1	14" 300# RF WN	OUTLET	*
V	1	2" 300# RF LWN	VENT	w/ BLIND FLANGE

* (2) 2" 300# RF LWN w/ BLIND

CERTIFIED CORRECT FOR FABRICATION

BY: _____ DATE: _____

NO.	DATE	REVISIONS	
2	11/5/09	REV'D. AS NOTED PER CUST.	DH/
1	9/21/09	REV'D PER CUST.	SM/DM

CUSTOMER: FRONTIER REFINING, INC. c/o BURNS & McDONNELL
P.O. NO.: 090065PO
ITEM NO.: 20-E-0825 B SERIAL NO.: X-7705
SERVICE: SECOND STAGE REACTOR FEED/EFFLUENT EXCHANGER
SHIP TO: CHEYENNE, WYOMING 1

ASSEMBLY AND SPECIFICATIONS FOR

ONE 40-288 A E T

DWN. BY DN
DATE 8-12-09
CKD. BY DN

Energy Exchanger Co
1844 No. Garnett Rd. • Tulsa, Okla.74116

DWG. NO. X-7705-A REV 2