TEIKOKU CANNED MOTOR PUMP DATA SHEET

No. QFH-1373A

Messrs : Evonik Degussa Corporation

2015/8/21

Order No. : C ※1
Job No. : ---
Project Name : ---
Item No. : C ※1
Item Name : ---
Model : C DA61-2518J4BL-0810T1V-A Qty : C 2

CERTIFIED
Drawing conforms to the customer's latest specifications

Sign For Receipt (For custmer)

TEIKOKU ELECTRIC MFG. CO., LTD.

Approved by	Checked by	Designed by
R. Takeuchi	R. Matsumura	M. Morii

Operating Conditions

Total Head (m) : 34.3 Capacity (L/min) : 1503
(m3/h) : 90.2
Suction Press. (barA) : 1.33 Discharge Press. (barA) : ---
NPSHava. (m) : 12.35 NPSHreq. (m) : 6
Liquid : AcCH
Temperature (Des./Nor.) (℃) : -2 / ---
Specific gravity (Des./Nor.) : 1.02 / ---
Viscosity (Des./Nor.) (mPa·s) : 6.11 / ---
Mechanical Design Temperature (℃) : ---
Specific Heat (kJ/(kg·K)) : --- Melting Temp. (℃) : ---
Vapor Press. (BarA) : 0.032
Solids Name : ---
Concentration (wt%) : --- Particle Size (μm) : --- S.Gr. : ---
Flushing or Barrier Fluid : ACA
Liquid/S.Gr. (cP) : 1 / 0.5
Press. (MPaG) : S.P.+ 0.3 ±0.05 Flow (m3/h) : ---

Materials

Casing : SCS14(CF-8M 316 SS)
Impeller : SCS14(CF-8M 316 SS)
Adapter : SCS14(CF-8M 316 SS)
RBH : SUS316(316 SS)
Motor Flange : SUS316L(316L SS)
Stator Can : ALLOY C-276
Shaft : SUS316(316 SS)
Rotor Can : SUS316L(316L SS)
Bearing : Carbon Graphite
Shaft Sleeve
+ Thrust Collar : SUS316+Stellite(316 SS+Stellite)
Pump Gasket : C SUS316(316 SS)+Grafoil
Motor Gasket : C SUS316(316 SS)+Grafoil
O-ring : PTFE
Mechanical Seal : SiC+Carbon

Pump Design & Construction

Design Press C (bar) : C 10.34 Temp. (℃) : -2
Code Applied : None Nameplate : English

Nozzle Connection : ASME Finish : SMOOTH FINISH

Nozzle	Rating	Size	Facing	Position
Suction	150LB	4"	RF	END
Discharge	150LB	3"	RF	TOP
Drain	150LB	1/2"	RF	BOTTOM
Reverse	---	---	---	---

Jacket Design Press. (psi) : 125

Utilities Required		Media	Condition(Max)	Flow(Min.)	Connection
Casing	NONE	---	---	---	---
Motor	COOLING	Brine	-15 ℃	0.72 m3/h	NPT 1/2
Heat Ex./Ext. Circl	C ---	C ---	C ---	C ---	C ---
Motor(Stop)	---	---	---	---	---

Customer :Evonik Corporation
PO# :4701013179/4701319034
Project :ACA G600
Project# :4142.00940
Evonik's Pump# :P-1020/P-1020S
Requisition# :C0078-010

Performance

Impeller Type : CLOSE
No. of Stage : 1
Min. Flow (L/min) : ---
Min. Flow (m3/h) : ---

Spare Parts

Accessories

Vendor Drawings and Data

Dimensional Dwg. : C 3E-7473
Terminal Box : 4N-9083-01
Sectional View Dwg. : 6E-8533
Material List : P-32842
Est. Performance Curve : SFH-1373A
Connection Diagram : 4N-9082
Mechanical Seal : 4N-4024-15
Recommended Spare
Spare Parts List : SC-1044
Allowable Piping Forces and Moments : 4N-6993-05

Power Supply & Drive Motor

Frame No. : 518 Duty : Cont
Voltage(V) : 460 Frequency(Hz) : 60 Phase : 3 Pole : 2
Output(kW/hp) : 29/38.89 Rated Amp.(A) : 55 Start Amp.(A) : 210
Thermal Class : 220 Start Method : DIRECT
R.P.M.(rpm) : 3600 Direction : C.C.W.(Viewed from Pump Suction)
Voltage for protection(V) : 120 Protection Device : Thermostat b
Dry Run Protection Relay : ---
Terminal Box : Stud/Thread/ 1
Power Cable Conduit : NPT2 Cable O.D.(Main) (mm) : ---
Instrument Cable Conduit : NPT3/4 Cable O.D.(Sub) (mm) : ---
ATEX Marking : ---

Other

Special Treatment : None
Painting Color : LightGray
Rotating Direction
Monitoring : None
Bearing Wear Monitor : Radial / Local

Remarks :
- T-USA#385330
- Hazardous Area Classification : Class.1, Div.2, Gr.C&D T2
- C Mechanical Design Temperature : 170℃ (Pumps do not run at this temperature. Pumps are not expected to function post experience of this temperature.)
- C ※1 Item No.P-1020 / Order No.4701013179, Item No.P-1020S / Order No.4701319034

REVISIONS
B:Added 1 Point. (Aug.27'15)M.Morii
C:Revised 12 points, Added 2 points, Deleted 1 point (2016.3.14)M.Morii
D:Deleted 1 point. (Mar.23'16)M.Morii

3F 国際 コピー: 0 PDF: 1 M.Morii

3E-7473

NOZZLE

a、b・・・JACKET INLET・・・・・・・・NPT1/2
a'、b'・・・JACKET OUTLET・・・・・・・NPT1/2
c・・・・・CIR. LIQUID OUTLET・・・ASME 150Lb 1/2" RF
d・・・・・CIR. LIQUID INLET・・・・ASME 150Lb 1/2" RF

Customer	:Evonik Corporation
PO#	:4701013179/4701319034
Project	:ACA G600
Project#	:4142.00940
Evonik's Pump#	:P-1020/P-1020S
Requisition#	:C0078-010

CERTIFIED

Drawing conforms to the customer's latest specifications

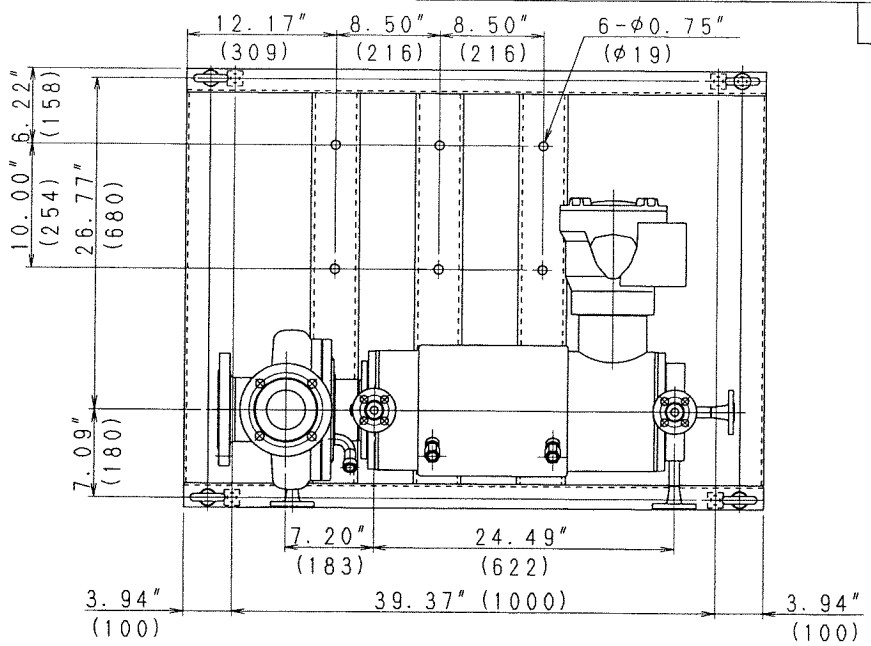

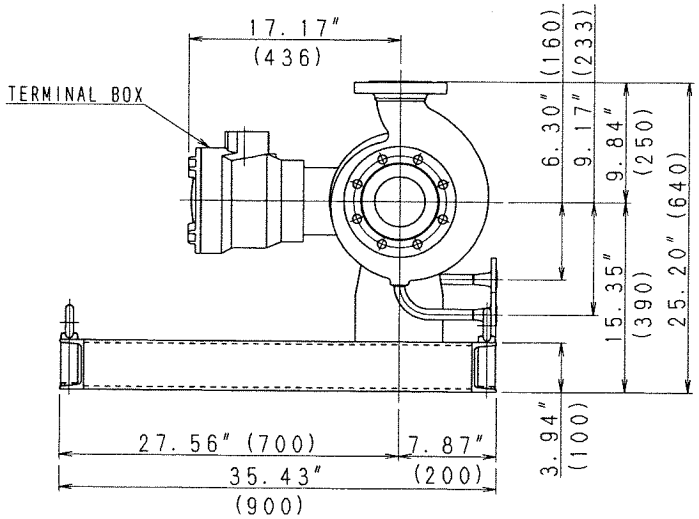

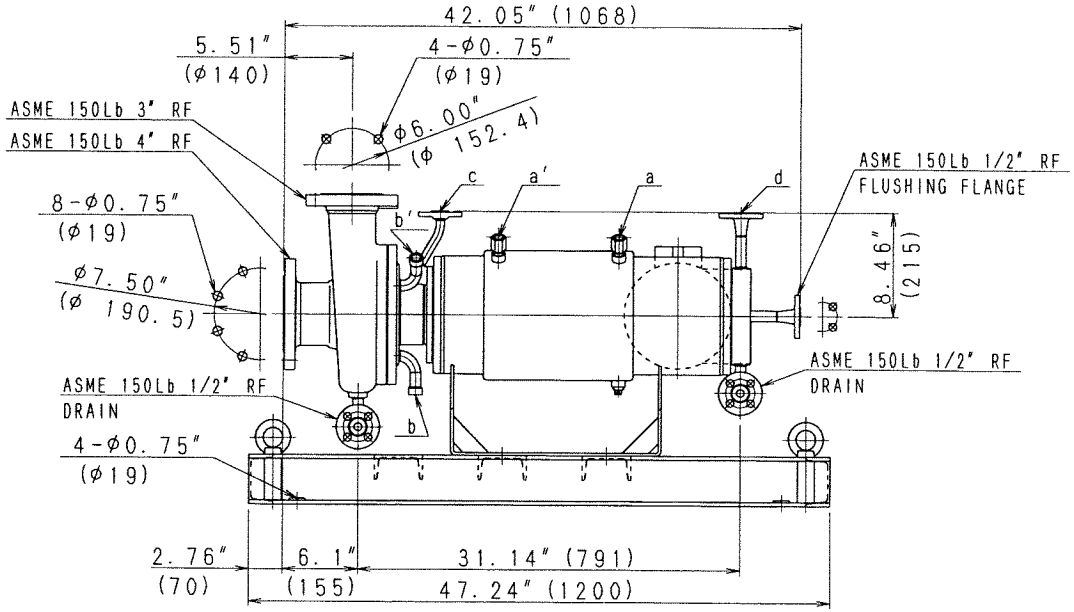

FH1373A
WEIGHT : 360kg (794Lb)

REVISIONS	
B	Revised Mar.25'16 M.Morii

APPROVED	CHECKED	DRAWN	SCALE	DWG. TITLE 外形図
R.Takuma	R.Matsuno	M. Morii Mar·14·'16	FREE	DIMENSIONAL DRAWING TYPE:DA-518J-0810T1

株式会社帝国電機製作所 TEIKOKU ELECTRIC MFG. CO., LTD.

DWG. NO. 3E-7473 B

CERTIFIED
Drawing conforms to the customer's latest specificatiothe. This is a final certified outline drawing.

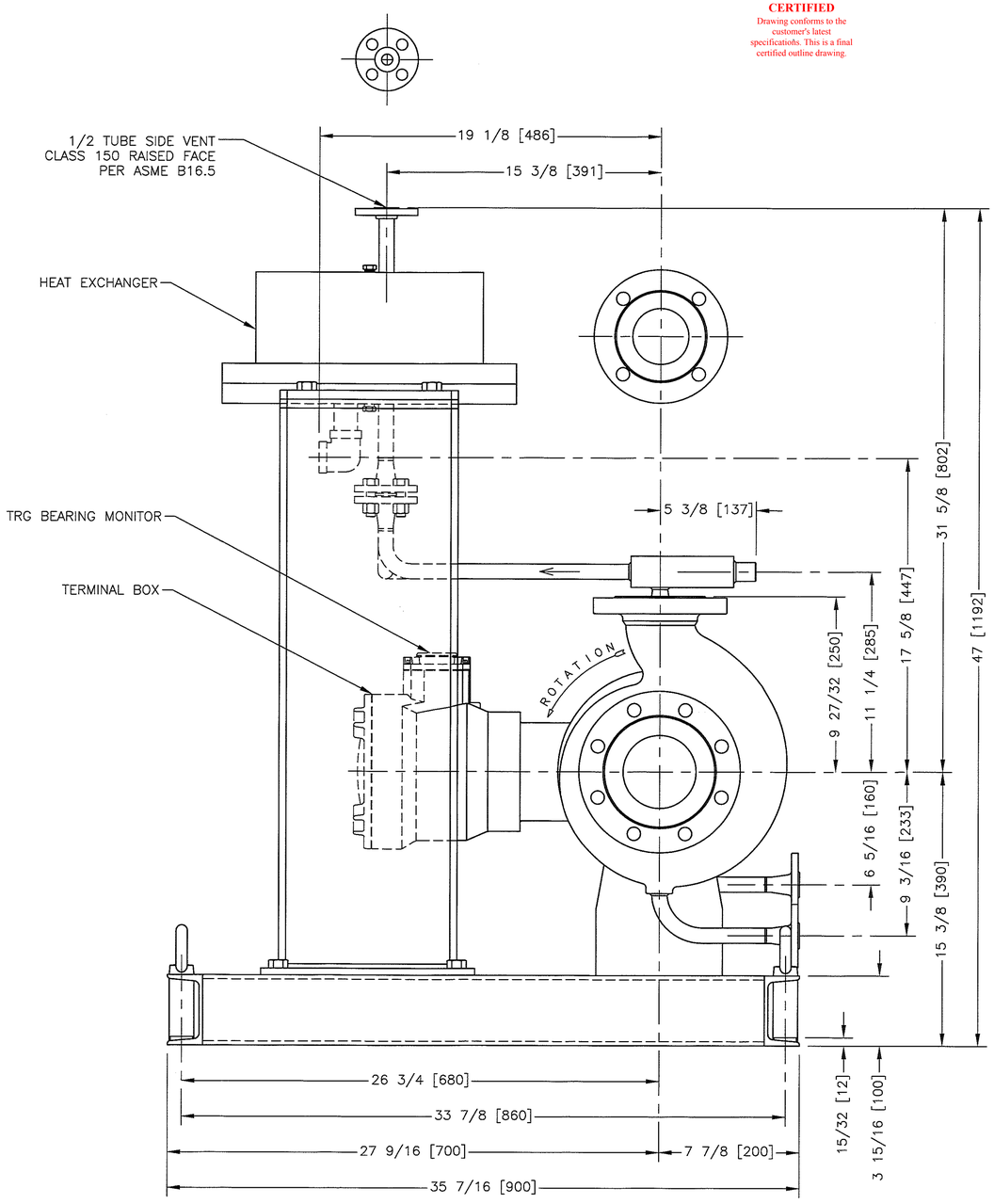

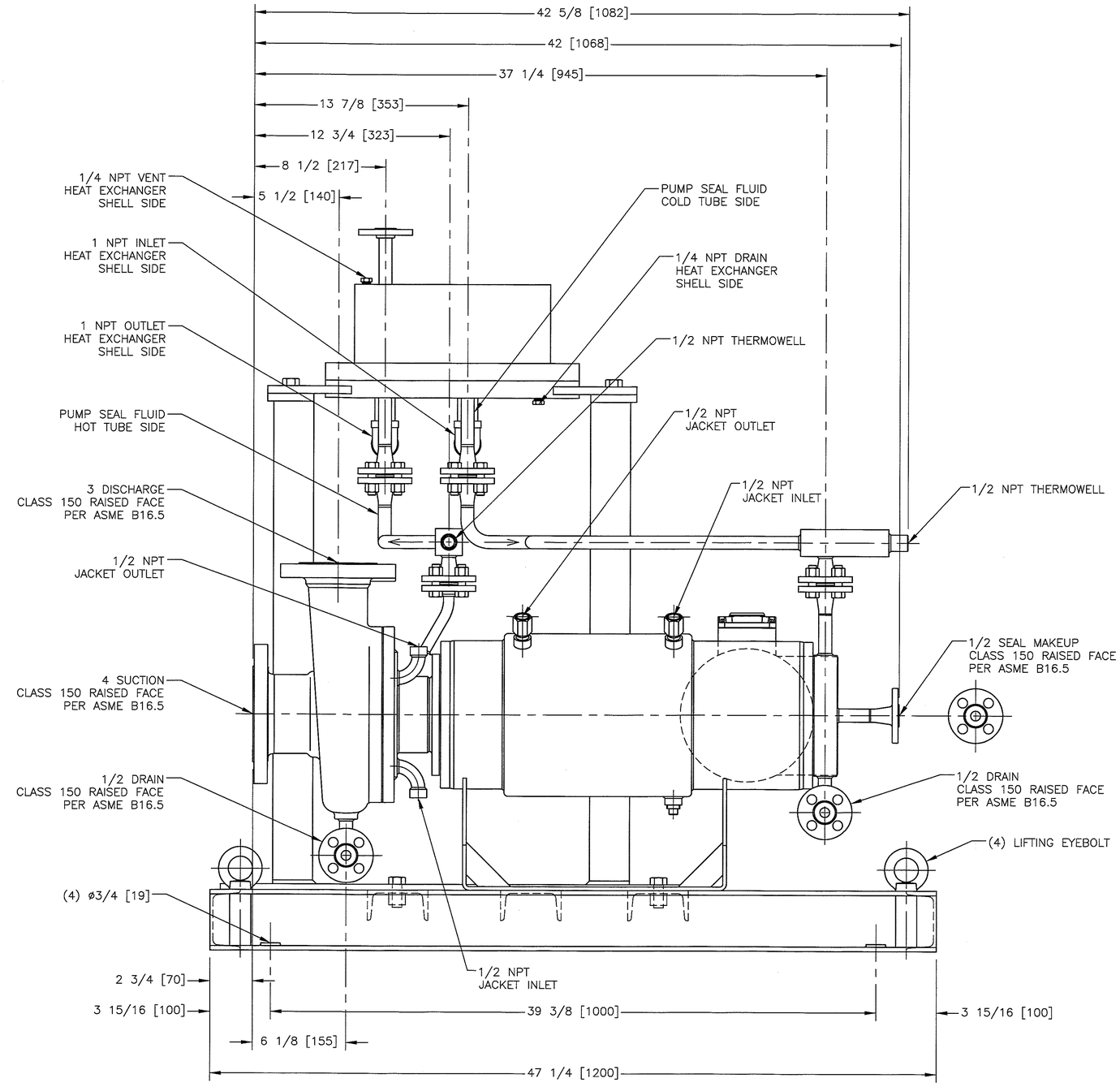

CUSTOMER: EVONIK CORPORATION
PO#: 4701013179 / 4701319034
PROJECT: ACA G600
PROJECT#: 4142.00940
EVONIK'S PUMP#: P-1020/P-1020S
REQUISITION#: C0078-010
WEIGHT: 1120 LBS.
PUMP AND HEAT EXCHANGER WILL HAVE 2" OF CELLULAR GLASS INSULATION.

NO.	DATE & PRO. NO.	REVISIONS	BY
1	3/31/16 S.0.25375	CHGD. H/E DIMS. & LOC.; ADD CUSTOMER COMMENTS	E.M.

ORIGINAL

TEIKOKU USA INC CHEMPUMP
Containment, Reliablity & Safety by Design

UNLESS OTHERWISE STATED,
-ALL UNITS IN INCHES
-DIMS. IN BRACKETS ARE IN mm
-DIMS. MARKED * ARE ±1/16 [±2]
-ALL OTHER DIMS. ARE ±1/4 [±6]
-ANGLE DIMS. ARE ±5
NOTE: ROUNDING TO NEAREST INCH/mm PRECLUDES INCH/mm CONVERSION

	DATE
DRAWN E.W.M.	3/8/16
CHECKED CMH	3/11/16
APPROVED CMH	3/11/16
SCALE 1:4	

TITLE: OUTLINE DA61-518-0810T

D | DRAWING NO. 65859 | REV. 1

4N-9083-01

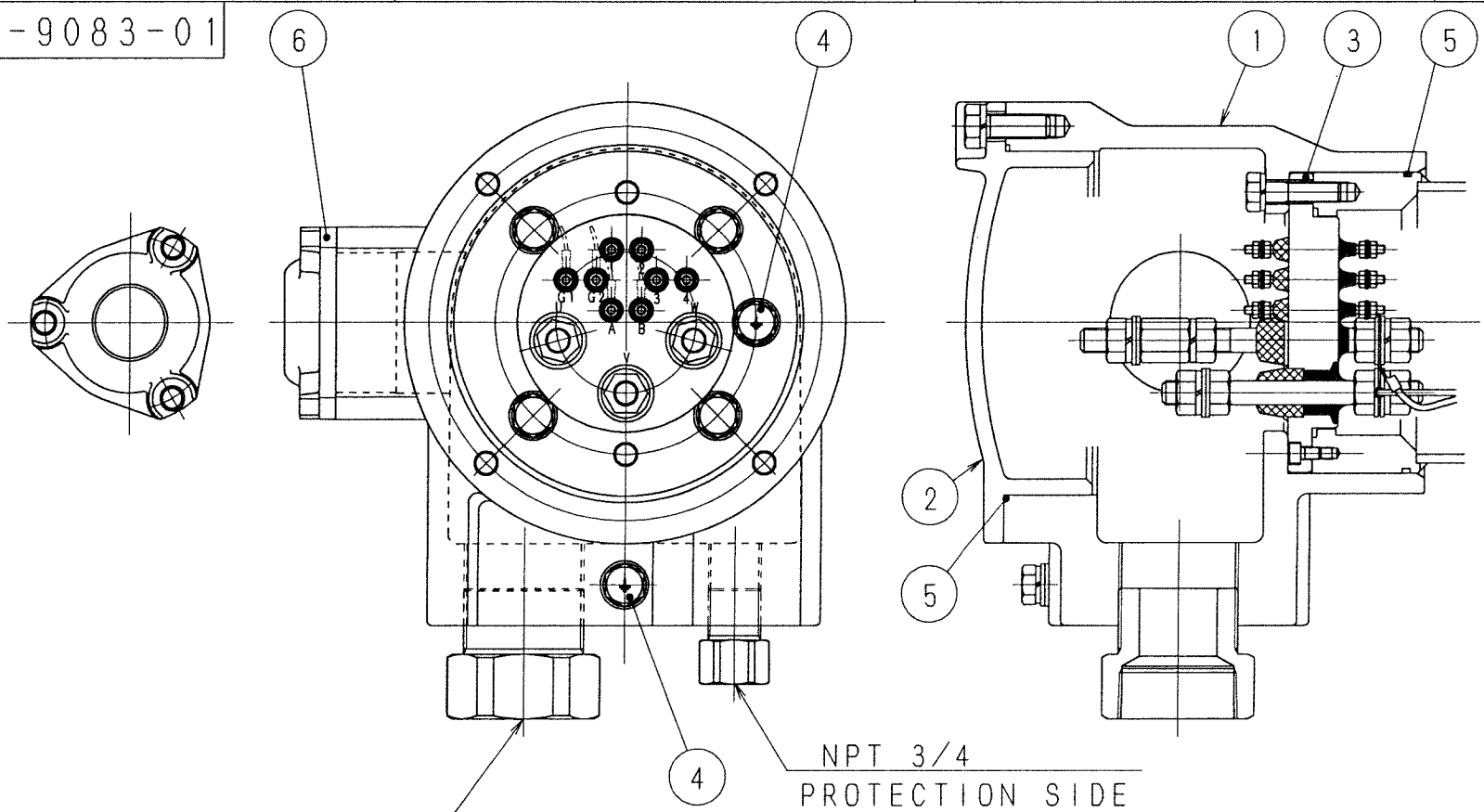

No.	名称 NAME
1	端子箱 TERMINAL BOX
2	端子蓋 TERMINAL COVER
3	端子板 TERMINAL PLATE
4	アース端子 EARTH TERMINAL
5	Oリング O-RING
6	TRGメータ TRG METER

端子記号 TERMINAL MARK

U, V, W・・・・・・・電源 SOURCE (M12)

1, 2, 3, 4・・・・・サーモスタット THERMOSTAT (M4)

G1, G2, A, B・・・TRGメータ TRG METER (M4)

FH1373A

REVISIONS

Customer	:Evonik Corporation
PO#	:4701013179/4701319034
Project	:ACA G600
Project#	:4142.00940
Evonik's Pump#	:P-1020/P-1020S
Requisition#	:C0078-010

APPROVED	CHECKED	DRAWN	SCALE
R. Takeuchi	R. Matsumura	M. Morii Aug·19·'15	FREE

DWG. TITLE 端子箱 TERMINAL BOX

SIZE : L FMCⅡ

株式会社帝国電機製作所 TEIKOKU ELECTRIC MFG. CO., LTD.

DWG. NO. 4N-9083-01

6E-8533

NOTE Bearing A---with spiral & straight grooves
Bearing B---with spiral grooves

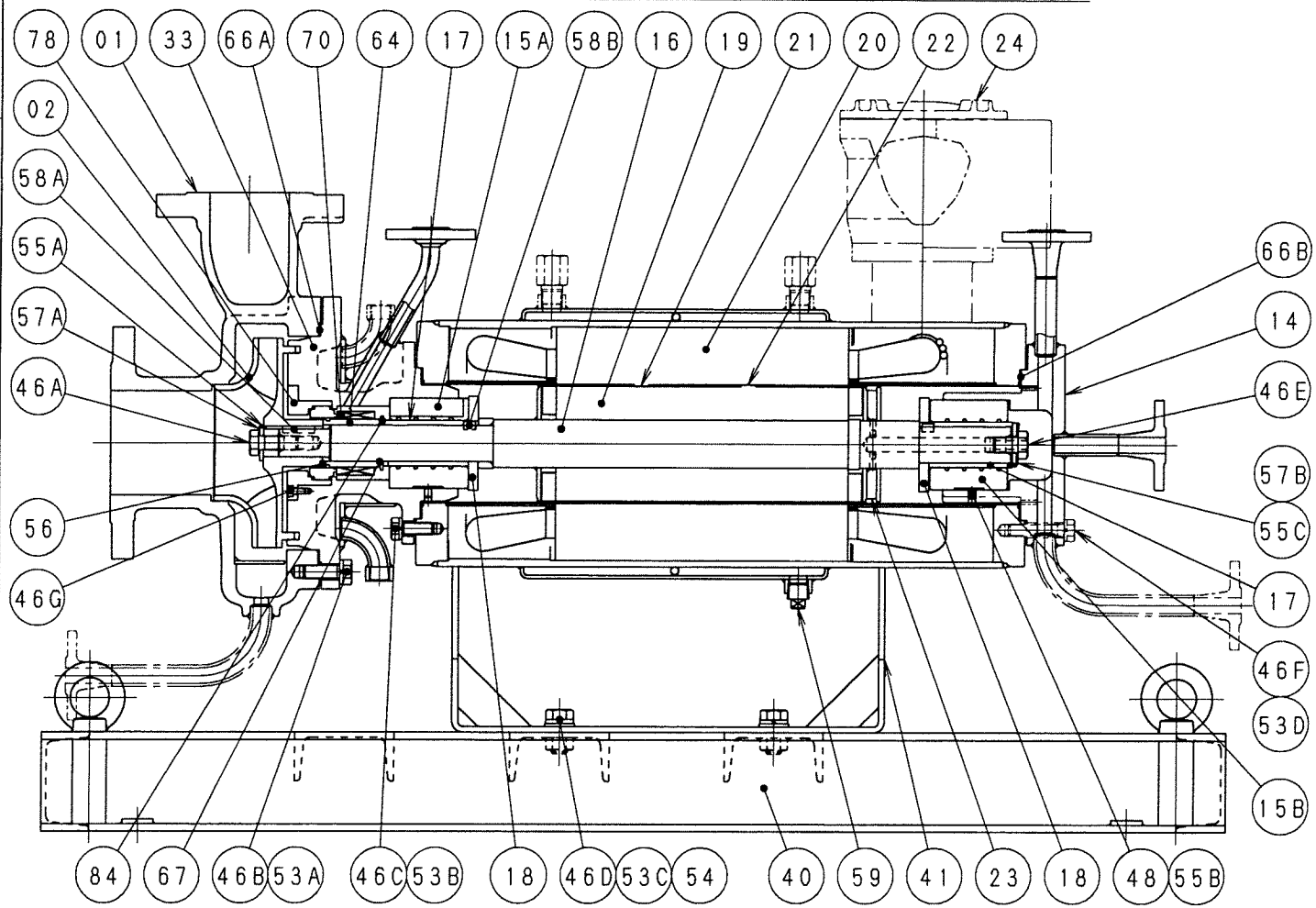

FH1373A

No.	NAME OF PARTS	No.	NAME OF PARTS
01	CASING	48	SET SCREW
02	IMPELLER		
		53A	SPRING WASHER
14	R.B. HOUSING	53B	SPRING WASHER
15A	BEARING A	53C	SPRING WASHER
15B	BEARING B	53D	SPRING WASHER
16	SHAFT	54	PLAIN WASHER
17	SHAFT SLEEVE	55A	WASHER
18	THRUST COLLAR	55B	WASHER
19	ROTOR ASSY	55C	WASHER
20	STATOR ASSY		
21	ROTOR CAN	56	ADJUSTING WASHER
22	STATOR CAN	57A	LOCK WASHER
23	AUXILIARY IMPELLER	57B	LOCK WASHER
24	TERMINAL BOX ASSY	58A	KEY
33	ADAPTER	58B	KEY
		59	PLUG
40	BASE		
41	HOLDER	64	SPACER
46A	BOLT	66A	GASKET
46B	BOLT	66B	GASKET
46C	BOLT	67	O-RING
46D	BOLT	70	MECHANICAL SEAL
46E	BOLT	78	MECHANICAL SEAL GLAND
46F	BOLT	84	COLLER
46G	BOLT		

REVISIONS
B
Revised Mar. 14' 16 M. Morii

Customer :Evonik Corporation
PO# :4701013179/4701319034
Project :ACA G600
Project# :4142.00940
Evonik's Pump# :P-1020/P-1020S
Requisition# :C0078-010

APPROVED	CHECKED	DRAWN	SCALE
R. Takeuchi	R. Matsuno	M. Morii Aug·19·'15	FREE

DWG. TITLE 構造断面図
SECTIONAL VIEW DRAWING
TYPE:DA

株式会社帝国電機製作所
TEIKOKU ELECTRIC MFG. CO., LTD.

DWG. NO. 6E-8533 B

MATERIAL LIST

NO.	NAME	MATERIAL (JIS Std./Eq. ASTM, AISI Std.)	REMARKS
01	CASING	SCS14 / CF-8M 316SS	
02	IMPELLER	SCS14 / CF-8M 316SS	
14	R. B. HOUSING	SUS316 / 316 SS	
15A	BEARING A	Carbon Graphite	
15B	BEARING B	Carbon Graphite	
16	SHAFT	SUS316 / 316 SS	
17	SHAFT SLEEVE	SUS316 / 316 SS + Stellite	
18	THRUST COLLAR	SUS316 / 316 SS + Stellite	
19	ROTOR ASS' Y	———	
20	STATOR ASS' Y	———	FRAME:SUS304 / 304 SS
21	ROTOR CAN	SUS316L / 316L SS	
22	STATOR CAN	ALLOY C-276	
23	AUXILIARY IMPELLER	SUS316L / 316L SS	
24	TERMINAL BOX ASS' Y	FC200 / Cl. No. 35 etc.	
33	ADAPTER	SCS14 / CF-8M 316SS	
40	BASE	SS400 / Carbon Steel	
41	HOLDER	SS400 / Carbon Steel	
46A	BOLT	SUS316 / 316 SS	
46B	BOLT	B SCM435 / AISI4137	
46C	BOLT	B SCM435 / AISI4137	
46D	BOLT	S20C / AISI 1020	
46E	BOLT	SUS316 / 316 SS	
46F	BOLT	B SCM435 / AISI4137	
46G	BOLT	SUS316 / 316 SS	
48	SET SCREW	SUS316 / 316 SS	
53A	SPRING WASHER	B SWRH / Carbon Steel	
53B	SPRING WASHER	B SWRH / Carbon Steel	
53C	SPRING WASHER	SWRH / Carbon Steel	
53D	SPRING WASHER	B SWRH / Carbon Steel	
54	PLAIN WASHER	SPCC / Carbon Steel	
55A	WASHER	SUS316L / 316L SS	
55B	WASHER	SUS316L / 316L SS	
55C	WASHER	SUS316L / 316L SS	
56	ADJUSTING WASHER	SUS316L / 316L SS	
57A	LOCK WASHER	SUS316L / 316L SS	
57B	LOCK WASHER	SUS316L / 316L SS	
58A	KEY	SUS316 / 316 SS	
58B	KEY	SUS316 / 316 SS	
59	PLUG	B SUS304 / 304 SS	
64	SPACER	SUS316 / 316 SS	
66A	GASKET	B SUS316 / 316 SS+Grafoil	
66B	GASKET	B SUS316 / 316 SS+Grafoil	
67	O-RING	PTFE	
70	MECHANICAL SEAL	SiC + Carbon	
78	GLAND	SUS316 / 316 SS	
84	COLLAR	SUS316 / 316 SS	

Customer :Evonik Corporation
PO# :4701013179/4701319034
Project :ACA G600
Project# :4142.00940
Evonik's Pump# :P-1020/P-1020S
Requisition# :C0078-010

(DA)
B Revised 9 Points, Deleted 2 Points. (2016. 3. 14 M. Morii)

APPROVED	CHECKED	DRAWN
R. Takeuchi	R. Matsumura	M. Morii Aug. 20 '15

P-32842

TEIKOKU ELECTRIC MFG. CO., LTD.

FH1373A

ESTIMATED PERFORMANCE CURVE

Date : Aug. 19. 2015
No : E18H0037-00
Dwg. No. : SFH-1373A

Item No. B	P-1020 / P-1020S	Item Name	****
Model B	**DA61-2518J4BL-0810T1V-A**		

Frequency	60	Hz	Total Head	34.3	m			
Voltage	460	V	Capacity	1503	L/min	90.2	m3/h	
Phase	3		Min.Flow	350	L/min	21	m3/h	
Pole	2		Liquid	AcCH				
Output	29	kW	Temp.	-2	degC			
Current	55	A	S.G.	1.02		Vis.	6.11	mPas
			NPSHavail.	12.35	m	NPSHreq.	6	m

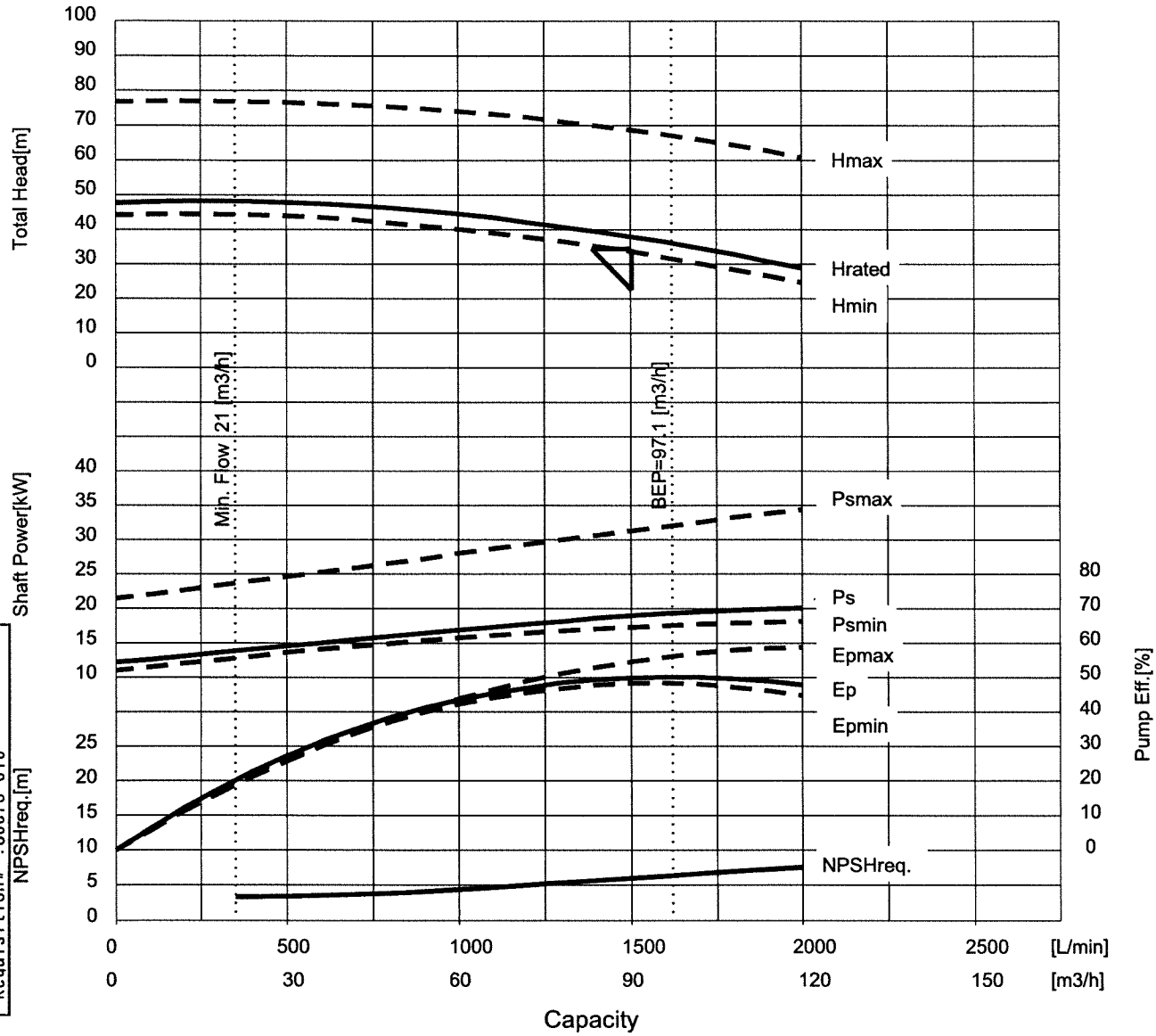

Customer :Evonik Corporation
PO# :4701013179/4701319034
Project :ACA G600
Project# :4142. 00940
Evonik's Pump# :P-1020/P-1020S
Requisition# :C0078-010

Remarks :

- Shut-off head : 47.6m
- 37.9m, 49.9%, 19kW, 3495rpm @ rated flow
- 120m3/hr, 20.1kW @ EOC
- 34.39kW @ EOC (max. dia.)
- Ns : 29.08, SSS : 9210
- Impeller Dia(mm):208(Max)/172(Rated)/166(Min)
- Output:38.89(hp)

REV.	Date	Description
B	2016.3.14	Revised 2 Points. M.Morii

APPROVED BY	CHECKED BY	DRAWN BY
R.Takeuchi	R.Matsumura	M.Morii

TEIKOKU ELECTRIC MFG. CO., LTD.

UNIS Version 3.0.2
NDTS11_15

4N-9082

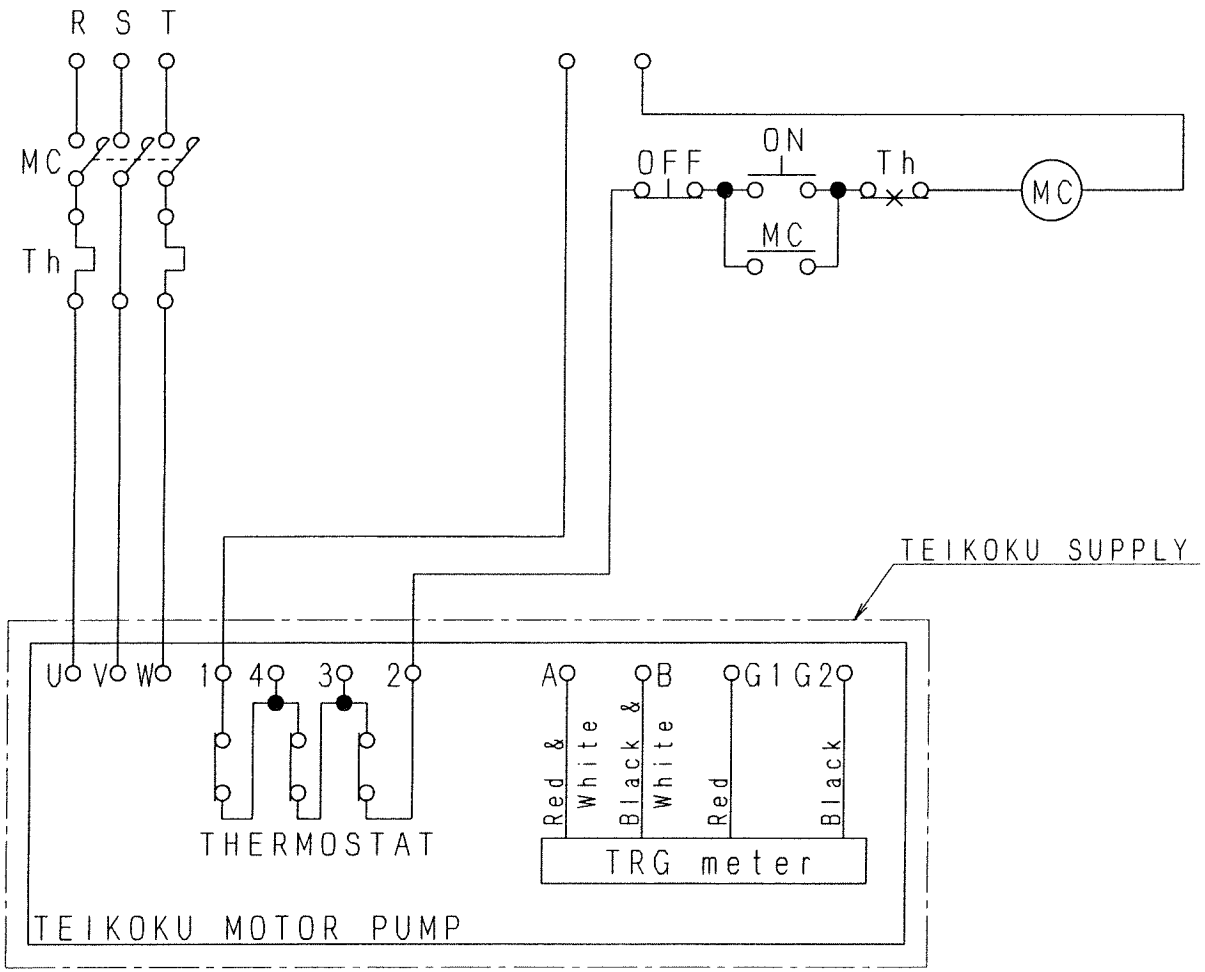

THERMOSTAT	
THERMAL CLASS	220
RATING	392°F-CUT OFF
b-CONTACTOR	AC250V-2.5A AC125V-5.0A DC30V-6.5A

SYMBOLS	NAME
R S T	POWER TERMINAL
U V W	TMP TERMINAL
MC	MAGNETIC CONTACTOR
ON·OFF	PUSH BUTTON SWITCH
Th	THERMAL RELAY
TRG meter	TEIKOKU ROTARY GUARDIAN

FH1373A

HERMETICALLY SEALED

REVISIONS

Customer	:Evonik Corporation
PO#	:4701013179/4701319034
Project	:ACA G600
Project#	:4142.00940
Evonik's Pump#	:P-1020/P-1020S
Requisition#	:C0078-010

APPROVED	CHECKED	DRAWN	SCALE	DWG. TITLE
R. Takemoto	R. Matsuno	M. Morii Aug·19·'15	FREE	CONNECTION DIAGRAM FMC-Ⅱ C-CLASS (392°F) L

株式会社帝国電機製作所
TEIKOKU ELECTRIC MFG. CO., LTD.

DWG. NO. 4N-9082

4N-4024-15

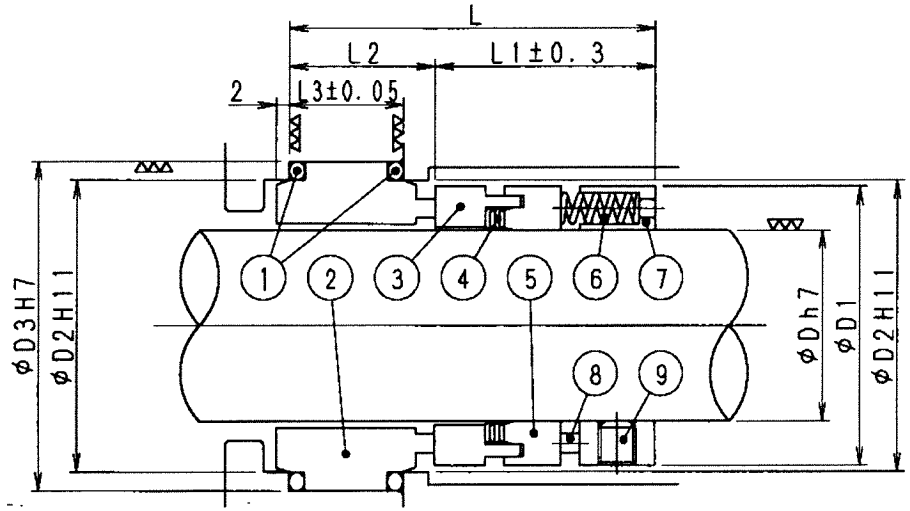

G-No	D	D1	D2	D3	L	L1	L2	L3
1	20	34	36	42	58	35	23	18
2	22	36	38	44	58	35	23	18
3	24	38	40	46	58	35	23	18
4	25	39	41	47	58	35	23	18
5	28	42	44	50	58	35	23	18
6	30	44	46	52	58	35	23	18
7	32	46	48	54	58	35	23	18
8	33	47	49	55	58	35	23	18
9	35	49	51	57	58	35	23	18
10	38	54	58	64	63	38	25	20
11	40	56	60	66	63	38	25	20
12	42	58	62	68	63	38	25	20
13	43	59	63	69	63	38	25	20
14	45	61	65	71	63	38	25	20
15	48	64	68	74	63	38	25	20

G-No	D	D1	D2	D3	L	L1	L2	L3
16	50	66	70	76	64	39	25	20
17	52	68	72	78	65	40	25	20
18	53	69	73	79	65	40	25	20
19	55	71	75	81	65	40	25	20
20	58	76	83	89	69	41	28	22
21	60	78	85	91	69	41	28	22
22	62	80	87	93	69	41	28	22
23	63	81	88	94	69	41	28	22
24	65	83	90	96	69	41	28	22
25	68	86	93	99	71	41	30	24
26	70	90	95	101	72	42	30	24
27	75	95	104	110	72	42	30	24
28	80	100	109	115	73	42	31	25
29	90	110	119	125	76	45	31	25

No.	NAME	NOTES
1	O ﾘﾝｸﾞ O RING	PTFE FF (TEFLON)
2	ｼｰﾙ ﾘﾝｸﾞ SEAL RING	CARBON
3	ﾒｲﾃｨﾝｸﾞ ﾘﾝｸﾞ MATING RING ASS'Y	SiC RETAINER:TITANIUM
4	V ﾊﾟｯｷﾝ V-PACKING	PTFE FF (TEFLON)
5	ｺﾝﾌﾟﾚｯｼｮﾝ ﾘﾝｸﾞ COMPRESSOIN RING	316 SS
6	ｺｲﾙ ｽﾌﾟﾘﾝｸﾞ COIL SPRING	316 SS
7	ｶﾗｰ COLLAR	316 SS
8	ﾄﾞﾗｲﾌﾞ ﾋﾟﾝ DRIVE PIN	316 SS
9	ｾｯﾄ ｽｸﾘｭｰ SET SCREW	316L SS

REVISIONS

B	Mar. 22'01 G-29 Added (N.Maruo)	
C	Aug. 19'03 Revised (K.Nakazumi)	

Customer :Evonik Corporation
PO# :4701013179/4701319034
Project :ACA G600
Project# :4142.00940
Evonik's Pump# :P-1020/P-1020S
Requisition# :C0078-010

APPROVED	CHECKED	DRAWN	SCALE
M. Sakai	T. Takeuchi	R. Takeuchi Feb 2 '98	FREE

DWG. TITLE メカニカル シール
MECHANICAL SEAL
TYPE:L1E

株式会社 帝国電機製作所
TEIKOKU ELECTRIC MFG. CO., LTD.

DWG. NO. 4N-4024-15 C

SPARE PARTS LIST FOR RECOMMEND

TYPE DA－510－T	SC－1044	1/2

No.	部品名 PARTS NAME	寸法 DIMENSION	材質 MATERIAL	数量/1台 FOR 1SETS	備考 REMARKS
1	BEARING A (with spiral & straight grooves)	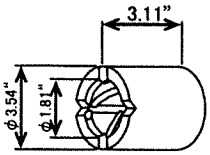	Carbon Graphite	1	#15A 90×46×79 (mm)
2	BEARING B	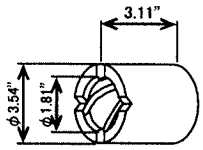	Carbon Graphite	1	#15B 90×46×79 (mm)
3	SHAFT SLEEVE	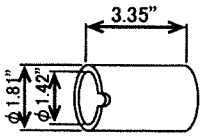	316 SS (SUS316) + Stellite	2	#17 46×36×85 (mm)
4	GASKET	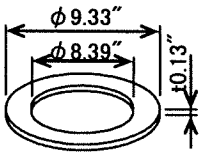	316 SS (SUS316) + Grafiol	1	#66A 237×213×3.2 (mm)
5	GASKET	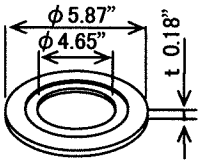	316 SS (SUS316) + Grafiol	2	#66B 149×118×4.5 (mm)
6	THRUST COLLAR	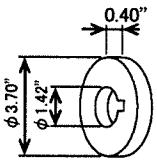	316 SS (SUS316) + Stellite	2	#18 94×36×10 (mm)
7	MECHANICAL SHEEL	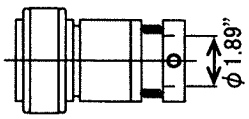	Tun. Carbide + Carbon	1	#70 48 (mm)

来歴 REV.	B:Revised (2016.3.14 M.Morii)	株式会社 帝国電機製作所 TEIKOKU ELECTRIC MFG. CO., LTD.	APPROVED	CHECKED	DRAWN
			R. Takeuchi	R. Matsumura	M. Morii Aug. 21. '15

Customer	:Evonik Corporation
PO#	:4701013179/4701319034
Project	:ACA G600
Project#	:4142.00940
Evonik's Pump#	:P-1020/P-1020S
Requisition#	:C0078-010

SPARE PARTS LIST FOR RECOMMEND

TYPE	SC－1044	2/2
DA－510－T		

No.	部品名 PARTS NAME	寸法 DIMENSION	材質 MATERIAL	数量/1台 FOR 1SETS	備考 REMARKS
8	LOCK WASHER	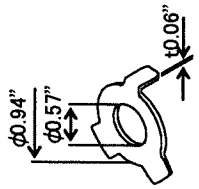	316L SS (SUS316L)	1	#57A 24×14.5×1.5 (mm)
9	LOCK WASHER	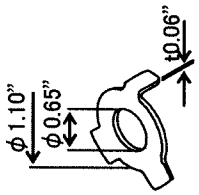	316L SS (SUS316L)	1	#57B 28×16.5×1.5 (mm)

来歴 REV.		株式会社 帝国電機製作所 TEIKOKU ELECTRIC MFG. CO., LTD.	APPROVED	CHECKED	DRAWN
			———	———	———

4N-6993-05

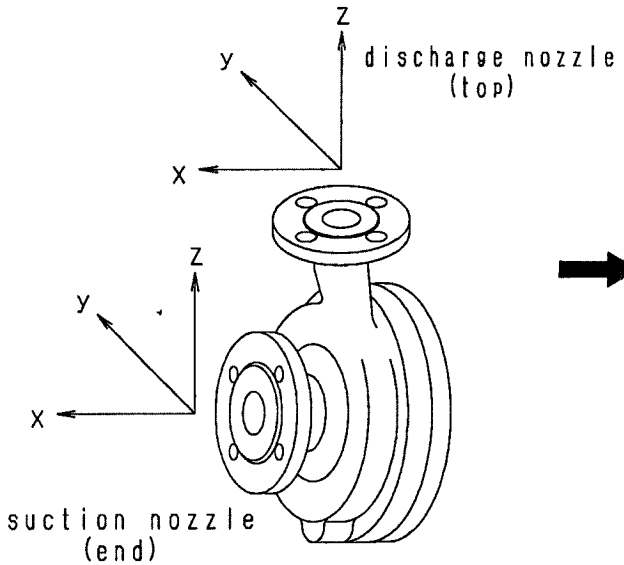

CASING

#No	PUMP TYPE	Fsx	Fsy	Fsz	Fdx	Fdy	Fdz	Msx	Msy	Msz	Mdx	Mdy	Mdz
1	0204	670	530	430	360	290	450	350	170	260	230	120	180
2	0405	890	710	580	530	430	670	460	230	350	350	170	260
3	0506	1110	890	730	710	580	890	710	350	540	460	230	350
4	0608	1330	1070	890	890	730	1110	950	470	720	710	350	540
5	0810	1780	1420	1160	1070	890	1330	1330	680	1000	950	470	720
6	1012	2450	1960	1600	1420	1160	1780	1820	930	1380	1330	680	1000
7	1215	3110	2490	2050	1960	1600	2450	2300	1180	1760	1820	930	1380
8	1520	4890	3780	3110	2490	2050	3110	3530	1760	2580	2300	1180	1760
9	2025	6670	5340	4450	3780	3110	4890	5020	2440	3800	3530	1760	2580
10	1015	3110	2490	2050	1420	1160	1780	2300	1180	1760	1330	680	1000
11	0408	1330	1070	890	530	430	670	950	470	720	350	170	260
12	0508	1330	1070	890	710	580	890	950	470	720	460	230	350
13	1515	3110	2490	2050	2490	2050	3110	2300	1180	1760	2300	1180	1760
14	1010	1780	1420	1160	1420	1160	1780	1330	680	1000	1330	680	1000
15	1212	2450	1960	1600	1960	1600	2450	1820	930	1380	1820	930	1380

Customer	:Evonik Corporation
PO#	:4701013179/4701319034
Project	:ACA G600
Project#	:4142.00940
Evonik's Pump#	:P-1020/P-1020S
Requisition#	:C0078-010

NOTE : F = force (N) M = moment (N-m)
S = suction nozzle
d = discharge nozzle
See the figure for orientation of nozzle loads (x, y, z)

DQ1377

REVISIONS			
B	Rewritten Aug. 7'08 K. Nakazumi	C	Revised API610 8th Edition to API610 10th Edition. Sep. 3'08 Y. Shimizu
D	#11~#13 Added Sep. 2'13 K. Nakazumi	E	#14, #15 Added Mar. 20'15 K. Nakazumi

APPROVED	CHECKED	DRAWN	SCALE
T. Takeuchi	S. Kimura	Y. Shimizu Apr. 11' 08	FREE

DWG. TITLE 許容配管荷重
ALLOWABLE PIPING FORCES AND MOMENTS
SI Units API610(10th)

株式会社 帝国電機製作所
TEIKOKU ELECTRIC MFG. CO., LTD.

DWG. NO. 4N-6993-05 E

GRAHAM
ENGINEERING ANSWERS

HELIFLOW HEAT EXCHANGER SPECIFICATION SHEET

Customer:	Chempump Teikoku USA	Graham Ref.No.:	EG780 PHL16
Customer Ref:		Date:	Mar 8, 2016
Item:		Engineer:	NAS

Performance

		Inside Coil	Outside Coil
Description of fluid circulated		ACA	50% ETH. GLY.
Specific Gravity		1.032	1.080
Specific Heat	BTU/lb F	0.443	0.740
Thermal Conductivity	BTU/hr ft F	0.079	0.244
Viscosity (Film For Liquids)	cP	7.355	11.295
Rate of Flow	gpm	5.00	5.00
Rate of Flow	lb/hr	2580.15	2699.11
Temperature Entering Heliflow	F	77.00	5.00
Temperature Leaving Heliflow	F	56.00	17.00
Calculated Pressure Drop	psi	2.23	1.37
Operating Pressure	psig	?	?
Design Pressure	psig	150.00	75.00
Hydrostatic Test Pressure	psig	195.00	98.00
Design Temperature	F	300.00	300.00
Connection Sizes	in	1/2"	1”
Connection Type		150# RF FLG	FNPT
Total Duty	BTU/hr	23987.46	
Total Surface Supplied	ft2	11.69	
Model		PSC-116T/6C6C	
Coil Spacing		STD	
Tubes 3/8 Dia 18 BWG	316SS	Manifolds	316SS
BasePlate	316SS	Bolts	Alloy Steel
Casing	316SS	Gaskets	Non-Asbestos
Tubes To Manifold Joint:	Welded		
Code of Construction:	GRAHAM STANDARD		

General

Price F.O.B Batavia, N.Y.:	
Shipment:	
Weight	225.00 lb

Remarks

Buyer to review materials of construction for process compatibility.
Buyer to verify fluid physical properties used in the design.
Manifolds welded to baseplate.
1/2" MNPT Tube Side Vent Included.

Terms Conditions of Sale per GMC-1002-E unless otherwise indicated.

C:\Documents and Settings\mquintilone\Desktop\Heliflow Spec Sheets\HFLOWCND.dot