MATERIALS OF CONSTRUCTION

ITEM NO.	DESCRIPTION	MATERIAL
1	HEAD	SA516 GR70
2	FOLLOWER	SA516 GR70
3	END SUPPORT	A36
4	TOP BAR	304 STAINLESS STEEL
5	BOTTOM BAR	A36 W/ 304 S.S. COVER
6	M16 DIA. TIE BAR	SA193 GRB7 ZINC PLATED
7	TIE BAR HEX NUTS	SA194 GR2H ZINC PLATED
8	HEAT TRANSFER PLATES	SA240 TYP304/304L
9	STUDS	SA193 GRB7 ZINC PLATED
10	LINERS	SA240 TYP316L
11	GROUNDING LUG	304SS
12	PLATE GASKETS	EPDM PARATEMP2

APV
FACTORY SERVICE
FOR PARTS AND SERVICE
CALL OUR CUSTOMER
SERVICE DEPARTMENT
1-888-278-4321

SPX

CERTIFIED BY
SPX FLOW TECHNOLOGY - APV HEAT TRANSFER
1200 W ASH ST., GOLDSBORO, NC 27530, USA
TEL. (919) 735-4570

SERIAL No. G2015000318 YEAR BUILT 2015
PLATE ID SR2

MAX. ALLOWABLE WORKING PRESSURE

CHAMBER	A1 & B1	150 PSIG FV	AT	329°F
CHAMBER	B2 & A2	150 PSIG FV	AT	329°F
CHAMBER	X	X	AT	X
CHAMBER	X	X	AT	X

MIN. DESIGN METAL TEMPERATURE

CHAMBER	A1 & B1	-20°F	AT	150 PSIG
CHAMBER	B2 & A2	-20°F	AT	150 PSIG
CHAMBER	X	X	AT	X
CHAMBER	X	X	AT	X
OPERATING TEMP: MAX/MIN		329 / -20 °F		

IMPORTANT:
The Instruction Manual must be strictly observed during installation and operation of the equipment.

TAG NO.: X-8905

APV
FOR PARTS, SERVICE AND AFTER MARKET ASSISTANCE CALL 1-888-APV-4321

MFR: SPX FLOW TECHNOLOGY - APV HEAT TRANSFER

EMPTY WT: 520 LBS. [236 KGS]

EQUIPMENT: SR2 M-12

PO NO.: 4701066018

MATERIALS OF CONSTRUCTION:
HEAD/FOLL: SA516 GR70
TIE BARS: SA193 GRB7 ZN PLTD
TIE BAR NUTS: SA194 GR2H ZN PLTD
HX PLATES: SA240 TYP304/304L

CAPACITY: 9.2 GAL [35.1 LITERS]

NOMINAL/MIN. THICKNESS (HEAD/FOLL):
1.0" [25MM] / 0.795" [20.16MM]

CORROSION ALLOW.: 0.06" 1.5MM

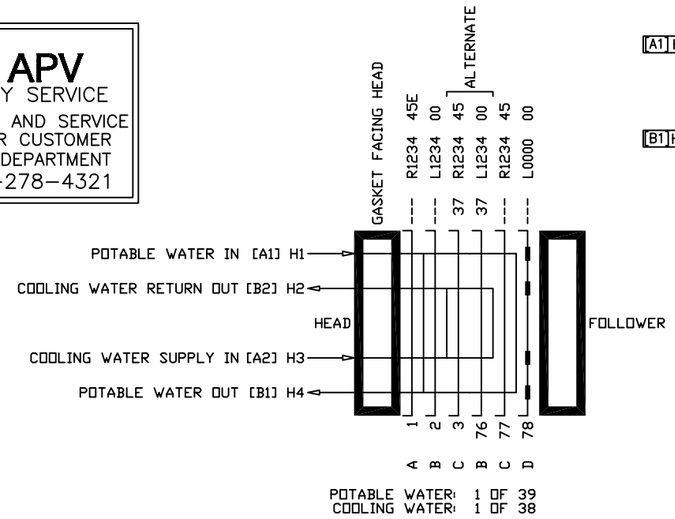

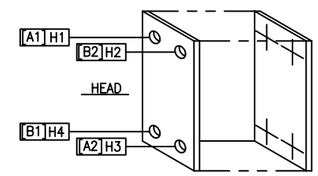

UNPORTED FOLLOWER

PLATE IDENTIFICATION
VIEWED FROM GASKETED SIDE OF PLATE

NOZZLE CROSS-REFERENCE	
H1	A1
H2	B2
H3	A2
H4	B1

45 00
PLATE ANGLES

○ - BLANKED (HOLE) ● - UNBLANKED (NO HOLE)

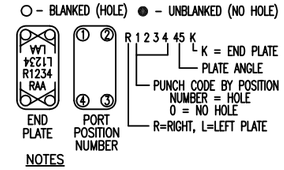

NOTES

1. THE INSTALLATION, OPERATION AND MAINTENANCE OF THIS HEAT EXCHANGER SHALL BE IN ACCORDANCE WITH THE APV PARAFLOW PLATE HEAT EXCHANGER INSTRUCTION MANUAL.

2. THIS MODEL HEAT EXCHANGER IS TIGHTENED USING A WRENCH ON THE TIE BAR HEX NUTS AT THE HEAD AND FOLLOWER ENDS. CLEAN AND LUBRICATE THE THREADS BEFORE OPENING OR CLOSING USING A LUBRICANT COMPATIBLE WITH CARBON STEEL. ***USE NEVER-SEEZ PURE NICKEL, NUCLEAR GRADE. DO NOT USE COMMON GREASE.**
THE PLATE PACK IS TO BE TIGHTENED IN ACCORDANCE WITH THE INSTRUCTION MANUAL SUPPLIED. DO NOT TIGHTEN BELOW THE MINIMUM DIMENSION SHOWN.

3. THE CUSTOMER IS RESPONSIBLE FOR PROVIDING:
   - ANCHOR BOLTS PER ASTM A36 MINIMUM WITH A RECOMMENDED DIAMETER OF 5/8".
   - PROTECTION AGAINST START UP OR OPERATING PRESSURES EXCEEDING THE MAXIMUM ALLOWABLE WORKING PRESSURE.
   - PIPING TO THE FOLLOWER OR CONNECTOR GRIDS THAT ALLOWS FOR FREE MOVEMENT WHEN THE UNIT IS OPENED FOR SERVICE AND PROVIDES FLEXIBILITY FOR THE VARIATION OF THE COMPRESSED PLATAGE DIMENSIONS.

4. LINED STUDDED PORTS ARE PROVIDED WITH A SMOOTH RAISED FACE FINISH, DESIGNED TO MATE WITH ANSI B16.5 CL150 FLANGES.

5. BOLT HOLES STRADDLE CENTERLINES SHOWN.

6. DIMENSIONS ARE SHOWN IN INCHES. DIMENSIONS IN BRACKETS [ ] ARE IN MILLIMETERS.

7. STANDARD TOLERANCES:
   FRAME AND FOUNDATION BOLT LOCATIONS: ±1/4 INCH [±6mm]
   NOZZLE CENTERLINE AND FACE DIMENSIONS: ±1/8 INCH [±3mm]

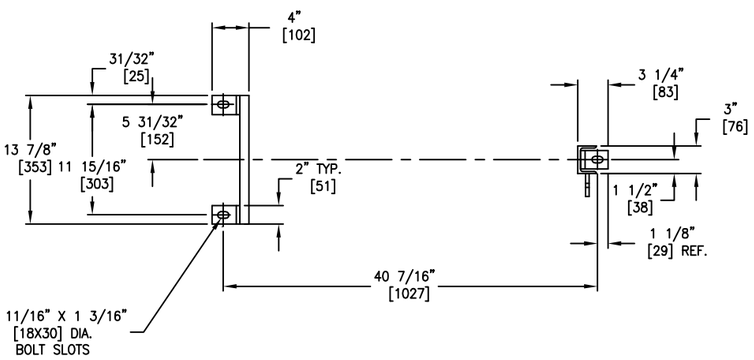

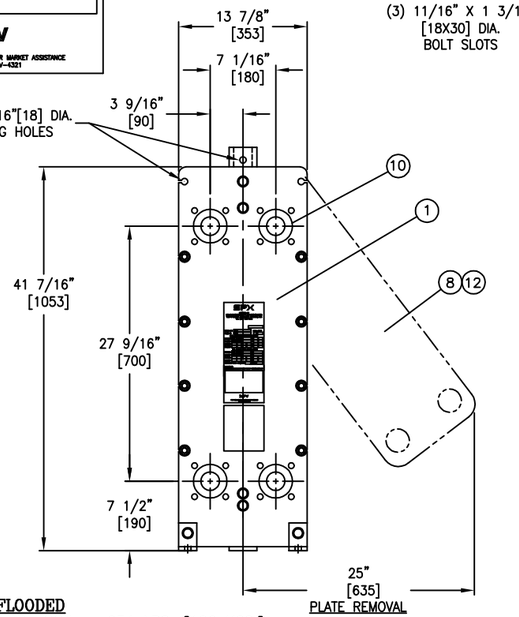

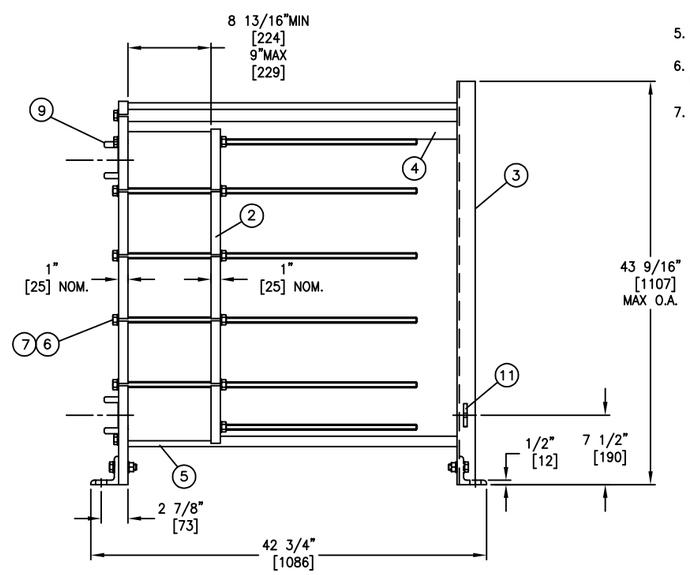

FRAME LOADINGS-FLOODED
REACTION @ EACH HEAD FOOT = 234 LBS. [106 KGS.]
REACTION @ END SUPPORT FOOT= 143.6 LBS. [65 KGS.]

SHROUD SIDES

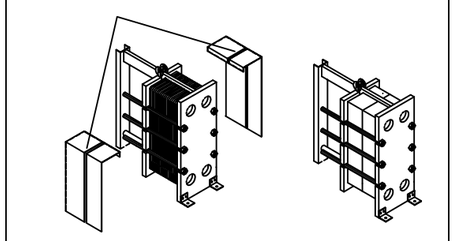

PLATE PACK SHROUD ASS'Y DETAIL

DESIGN SPECIFICATIONS

DESIGN CODE REF CALC: 1500318 ASME	ASME SECTION VIII DIV 1 2013 Edition
MAX. ALLOWABLE WORKING PRESSURE	150 PSIG. [10.3 BARG] FV
MINIMUM DESIGN METAL TEMPERATURE	-20°F. @ 150 PSIG. [-29°C. @ 10.3 BARG]
HYDROTEST PRESSURE	195 PSIG. [13.5 BARG]
MINIMUM OPERATING TEMPERATURE	-20°F. [-29°C.]
MAXIMUM OPERATING TEMPERATURE	329°F. [165°C.]
SERIAL NUMBER	G2015000318
HEAT TRANSFER AREA	140.6 SQ. FT. [13.2 SQ. M.]
FRAME SIZE	NO. 2
MAXIMUM FRAME CAPACITY	186 PLATES
DRY WEIGHT	520 LBS. [236 KGS.]
FLOODED (OPERATING) WEIGHT	597 LBS. [271 KGS.]
TOTAL LIQUID VOLUME	9.2 GALS. [35.1 LITERS]
FINISH	SPECIAL 2-COAT PAINT
ACCESSORIES SUPPLIED	GROUNDING LUG, SS SPRAY SCREEN

OPERATING CONDITIONS

LIQUID	FLOW RATE	TEMP. °C.	ΔP (Bar)
POTABLE WATER	20257 kg/hr	38.0° → 34.0°	0.12
COOLING WATER	16204 kg/hr	32.0° → 37.0°	.08

Plates and Gaskets (Total: 78)

Qty	Material No	ID	Description
1	G1714K4XBX4AWWXA	A	SR2 (45) END 304/L 0.4* PCL PARATEMP2 (1RED)
38	G1710F4XBX4AWWXA	B	SR2 (00) FLOW 304/L 0.4* PCL PARATEMP2 (1RED)
38	G1714F4XBX4AWWXA	C	SR2 (45) FLOW 304/L 0.4* PCL PARATEMP2 (1RED)
1	G1710F0XBX4AWWXA	D	SR2 (00) FLOW 304/L 0.4* PCL PARATEMP2 (1RED)

*PLATES 0.4mm THK

Gaskets

Qty	Material No	Description
4	G17XXRXXXXXGWXXA	GSKT SR2 FRAME PORT RING (SR2) IN

Frame

Qty	Material No	Description
1	GSR2XXXY12XXX21A	SR2 M-10 FS2
1	G3018023AXAXAXAX	Follower
1	G3018024G1G1G1G1	Head

Fittings

Qty	Material No	Pos	Description
4	G020HCDPA25A	H1,H2,H3,H4	2" 316L CL150 PL STUD HD ASSY 1.5mm LINER THK.

Accessories

Qty	Material No	Description
1	GASME U STAMP	ASME CERT. MARK WITH U DESIGNATOR
1	GB502501	LUGS,GROUNDING HEAD OR END SUPP'T
1	GB500349	SPRAY SCREEN SR2 FS2 304/304L SS
1	GSPEC-PAINT-2	SPECIAL PAINT 2-COAT
1	GB505871	CUSTOM PLATE 110MM X 125MM

Evonik Corporation
Theodore, AL
X-8905
PW Temperature Control Exchanger
G2015000318

P.O.NO: 4701066018

APV AN SPX BRAND
SPX Flow Technology Systems,Inc.
1200 W. Ash Street
Goldsboro, NC 27530
Tel: (919) 735-4570
Fax: (919) 581-1134

CONFIDENTIALITY NOTE: THE INFORMATION CONTAINED HEREON IS OF A CONFIDENTIAL NATURE AND IS THE PROPERTY OF SPX FLOW TECHNOLOGY SYSTEMS, INC. GOLDSBORO, NC, USA. IT SHALL NOT BE PHOTOGRAPHED, PHOTOSTATED, OR REPRODUCED IN ANY MANNER NOR USED FOR ANY PURPOSE WHATSOEVER EXCEPT WITH WRITTEN PERMISION OF SPX FLOW TECHNOLOGY SYSTEMS, INC. GOLDSBORO, NC, USA.

Description: SR2 M-12 PLATE HEAT EXCHANGER					
Checked:	Date:	Supersedes:	Scale: N.T.S.	Sheet: 1 OF 1	
Approved:	Date:	Drawn: GJE	Date: 8JUL15	Drawing No.: 1500318	Rev. 03

REV.	BY / DATE	CK. BY / DATE	DESCRIPTION AND LOCATION
03	KWR 10-8-15		CHANGED DESIGN / TEST PRESSURE PER CUSTOMER
02	KWR 9-24-15		CHANGED P&G PART NO'S,
01	GJE / 25AUG15		UPDATED TO INCLUDE CUSTOMER COMMENTS

CAD File: 1500318

AUTOCAD